96768683 04

CONTROL DATA CORPORATION

CDC® CYBER 18-
COMPUTER SYSTEMS

MAINTENANCE AIDS
PARTS DATA

Volume 3 of 3

HARDWARE MAINTENANCE MANUAL

96768683

CONTROL DATA CORPORATION

CDC® CYBER 18-
COMPUTER SYSTEMS

MAINTENANCE AIDS
PARTS DATA

Volume 3 of 3

HARDWARE MAINTENANCE MANUAL

REVISION RECORD

REVISION	DESCRIPTION
01	Preliminary version of manual released.
(6/77)	
02	Updated to add Dual Mode LCTT, plus miscellaneous corrections.
(9/77)	
03	Updated to add CDD, PBS Printer and miscellaneous corrections
(12/77)	
04	Updated per ECO 21070
(3/78)	

Publication No.
96768683

REVISION LETTERS I, O, Q AND X ARE NOT USED

Address comments concerning this manual to:

Control Data Corporation
Publications and Graphics Div.
4455 Eastgate Mall
La Jolla, California 92037

or use Comment Sheet in the back of this manual.

© 1976, 1977
by Control Data Corporation

Printed in the United States of America

LIST OF EFFECTIVE PAGES

New features, as well as changes, deletions, and additions to information in this manual, are indicated by bars in the margins or by a dot near the page number if the entire page is affected. A bar by the page number indicates pagination rather than content has changed.

PAGE	REV
Cover	
Title Page	
ii thru vi	03
vii/viii	02
ix thru xv	03
6A-i/6Aii	02
6A-1/6A-2	01
6A-3 thru	02
6A-6	02
6A-7 thru	01
6A-14	01
6A-15 thru	02
6A-27	02
6A-28 thru	04
6A-42	04
6A-43	01
6B-i	
6B-1/6B-2	
6C-i	
6C-1	
6D-i	01
6D-1 thru	02
6D-2A	02
6D-3 thru	01
6D-47	
6E-i	
6E-1 thru	
6E-32	
6F-i/6F-ii	
6F-1 thru	
6F-62	
6G-i	
6G-1 thru	
6G-31	
6H-i	
6H-1 thru	
6H-5	01
6J-i	02
6J-1 thru	01
6J-16	01
6J-17/6J-18	02
6J-19 thru	01
6J-26	01
6J-27 thru	02
6J-32	02
6J-33 thru	04
6J-38	04
6K-i	01
6K-1 thru	
6K-5	
6L-i	
6L-1	
6M-i	
6M-1 thru	
6M-31	01
6N-i thru	02
6N-2	02
6N-3	03

PAGE	REV
6Pi thru	02
6P-1	02
6Q-i thru	03
6Q-22	03
6R-i	02
6R-1/6R-2	02
6R-3/6R-4	03
6R-5 thru	02
6R-7	02
6R-8 thru	03
6R-10	03
6R-11/6R-12	02
6R-13/6R-14	03
6R-15 thru	02
6R-53	02
6S-i	02
6S-1	02
6T-1	03
7-1	01
7A-1/7A-2-	02
7A-3/7A-4	04
7B-1	01
7C-1	01
7D-1 thru	01
7D-6	01
7D-7/7D-8	02
7E-1	01
7F-1	02
7G-1	02
7H-1	01
7J-1 thru	02
7J-4	02
7K-1	01
7L-1	01
7M-1	01
7N-1	02
7P-1	02
7Q-1/7Q-2	03
7R-1	03
7S-1	02
7T-1	03
8-1	01
8A-1	
8A-2	
8B-1	
8C-1	
8D-1/8D-2	
8E-1	
8F-1/8F-2	01
8G-1 thru	02
8G-3	02
8H-1	01
8J-1/8J-2	02
8K-1	04
8L-1	01
8M-1	01
8N-1	02
8P-1	02

PAGE	REV
8Q-1/8Q-2	03
8R-1 thru	03
8R-4	03
8T-1	03
Comment Sheet	
Cover	

PAGE	REV

PAGE	REV

PREFACE

This manual provides general information maintenance of the CDC® CYBER 18 Computer Systems. The CYBER 18 System consists of a 1700 enhanced micro-programmable processor with controllers and peripheral options. This manual supports maintenance of the CYBER 18-20 System and the CYBER 18-30 Timeshare System only and is applicable only to systems having a minimum configuration of a MOS processor, card reader or cassette, and a console display.

This manual contains information to aid maintenance personnel in carrying out onsite maintenance activities. Volume 1 contains overall system introductory material, and volume 2, publication no. 96768682 and volume 3, publication number 96768683 contain detailed system maintenance information. The maintenance approach is to fault isolate using the diagnostic decision logic tables (DDLTs) contained in volume 2, and to make repairs through the use of corrective procedures. Corrective action is accomplished by exchanging replaceable subassemblies rather than replacing components. When repair cannot be accomplished by exchanging a replaceable subassembly, a support customer engineer and additional documentation, including volume 2, is required

The publications listed below provide more detailed information of each equipment comprising the CYBER 18 System:

Equipment	Title	Publication Number
MOS Micro Processor	CYBER 18 MOS Memory Processor Reference Manual	96768300
	CYBER 18-05/10/20/30 Site Preparation Manual	96728500
	CYBER 18 Computer Systems Installation Manual	39451500
	MOS Memory and Interface Hardware Maintenance Manual	96768600
	DE402-A 1700 Transform with Micro Memory Hardware Maintenance Manual	96728700
	GD122-B, GD122-E, XA148-A Power Supply System Hardware Reference/Maintenance Manual	96729200
Card Reader	CB104/105/106, CB202/203 Card Reader Hardware Reference/Maintenance Manual	49757900
	FH301-A Card Reader/Line Printer Controller Hardware Reference/Maintenance Manual	96728800
Line Printer	Line Printer Reference Manual	59709100
	FH301-A Card Reader/Line Printer Controller Hardware Reference/Maintenance Manual	96728800
	Line Printer Field Service Manual, Volume 1	91858400
	Line Printer Field Service Manual, Volume 2	91358500
	Line Printer Parts Identification Manual	91859100
Console Display	92450 Terminal Subsystem Hardware Maintenance Manual	62961200
	92450 Terminal Subsystem Operators Guide	62961400
	CC555 HMM	62957400
	CW212-A I/O-TTY Controller Hardware Maintenance Manual	96728900
PBS Printer	CT104 HMM	95445060
Matrix Printer	Printer HMM	95445028
	Printer RS232 I/F	95445069
Cartridge Disk Drive	FA111 Controller	89601485
	BR704 Drive	77834675

Equipment	Title	Publication Number
Magnetic Tape Transport	FA464 Controller HMM	89600866
	LCTT Reference Manual	49756300
	DZ101 Formatter HMM	49760400
	Magnetic Tape Transport Reference/Maintenance Manual	49756400
	FA107-A Magnetic Tape Controller Hardware Reference/ Maintenance Manual	96728600
	Magnetic Tape Transport Field Service Manual	49756900
	Magnetic Tape Transport Parts Identification Manual	49756500
Communications Line Adapter	FJ441-A Dual-Channel Communications Line Adapter Hardware Reference/Maintenance Manual	39452000
	GH508-A Basic Operators Panel Hardware Reference/ Maintenance Manual	39451800
	Communications Handbook	60405100
Breakpoint Panel	Breakpoint Controller and Breakpoint Panel Hardware Maintenance Manual	96729000
Tape Cassette Transport	FA104-A Tape Cassette Controller Hardware Reference/ Maintenance Manual	96711900
Software/ Diagnostics	Operational Diagnostic System (ODS) Reference Manual	96768410
	Instant Operational Diagnostic System (ODS)	39451600
Storage Module Drive	BJ701/BJ7B1 Storage Module Drive Hardware Reference Manual	83317300
	BJ701/BJ7B1 Storage Module Drive Hardware Maintenance Manual	83311300
	GB138-A Storage Module Drive Interface Hardware Reference/Maintenance Manual	96761300
Storage Module Control Unit	FA7A8/FA727 Storage Module Drive Controller/ Formatter Hardware Maintenance Manual	83312400
Flexible Disk Drive	Flexible Disk Drive Field Service Manual	75736120
	FA730-A Flexible Disk Drive Controller Hardware Reference/Maintenance Manual	96768800
	Product Specification for FDD Disk Cartridge	75270400
	9400 Flexible Disk Drive Format Compatibility	75735700
All Equipment	CYBER 18-20/30 Computer Systems Hardware Maintenance Manual, Volume 1	96768681
	CYBER 18-20/30 Computer Systems Hardware Maintenance, Manual, volume 2	96768682
	CYBER 18 Compuer Systems Installation Manual	39451500

CONTENTS

VOLUME 1

1. GENERAL DESCRIPTION 1-1
2. OPERATION 2-1
3. INSTALLATION 3-1
4. THEORY OF OPERATION 4-1
5. DIAGRAMS 5-1

VOLUME 2

6. MAINTENANCE 6-1

VOLUME 3

6. MAINTENANCE (Continued)

PROCESSOR PROCEDURES

Procedure No.		Page No.
		6A-i
Contents		6A-i
A1	Visual Inspection	6A-1
A2	Fan Filter Cleaning	6A-2
A3	Power Turn-On	6A-2
A4	Power Turn-Off	6A-2
A5	Cooling Fans Check	6A-2
A6	Cooling Fan Replacement	6A-3
A7	dc Power Supply Check (L H Research)	6A-4
A7.1	+5 V dc Power Supply Check (Scott)	6A-4
A8	dc Power Supply Replacement (L H Research)	6A-5.1
A8.1	+5 V dc Power Supply Replacement (Scott)	6A-5.2
A9	±15 V/±12 V dc Power Supply Check	6A-6
A10	±15 V/±12 V dc Power Supply Replacement	6A-7
A11	-9 V dc Power Supply Check	6A-9
A12	-9 V dc Power Supply Replacement	6A-10
A13	Power Distribution Box Components Check	6A-11
A14	AC Line Filter Replacement	6A-11
A15	Surge Current Limiter Board Replacement	6A-14
A16	Power Distribution Box Circuit Breaker Check/Replacement	6A-14
A17	Power Distribution Box Resistor Assembly Replacement	6A-14
A18	Triac Power Switch Replacement	6A-14
A19	POWER ON/OFF Switch Check/ Replacement	6A-19
A20	Operators Panel Printed Circuit Board Replacement	6A-19
A21	Operators Panel Switch and Bezel Replacement	6A-20
A22	Dual-Processor Multiplexer Printed Wiring Assembly Replacement	6A-21
A23	Logic Board Replacement	6A-21
A24	MOS Memory Board Replacement	6A-21
A25	Memory Interface Board Replacement	6A-25
A26	MOS Main Memory Run Parameters	6A-26
A27	Using CRECO Diagnostic with Multiple Subsystems	6A-28
A28	Multiple Subsystem Testing	6A-29
A29	Equipment Code Change, Level 1	6A-33
A30	Equipment Code Change, Level II	6A-34
A31	Micro and Macro Interrupt Assignment Change, Level I	6A 34
A32	Micro and Macro Interrupt Assignment Change, Level II	6A-36
A33	Loading Diagnostic Cards with Card Reader	6A-36
A34	Memory Parity Error Cleaning	6A-37
A35	Run Parameters for Micro-Memory Test	6A-38
A36	Run Parameters for Cassettes and Diskettes in non-standard system configurations	6A-40
Breakpoint Panel Procedures		6B i
Contents		6B-i
B1	Breakpoint Panel Replacement	6B-1
B2	Breakpoint Controller Replacement	6B 1
B3	Interface Cable Installation	6B-1
Communications Line Adapter Procedures		6C-i
Contents		6C-i
C1	Communications Line Adapter Installation/Replacement	6C-1
Card Reader Procedures		6D-i
Contents		6D-1
D1	Power Turn-On	6D-1
D2	Power Turn-Off	6D-i
D3	Loading Diagnostics	6D-2
D4	Off-Line Operation	
	Internal Continuous Feed Operation	6D-2
	External Continuous Feed Operation	6D-2

Page No.	Procedure No.		Page No.
	D5	+5 V dc Power Supply Check	6D-4
	D6	+17 V dc Power Supply Check	6D-4
	D7	Hopper Empty Switch Check	6D-4
	D8	Stacker Full Switch Check	6D-6
	D9	Control Panel Indicator and/or Switch Check	6D-9
	D10	Switch Board and Cable Replacement	6D-10
	D11	Amplifier Board Replacement and Riming/Read Lamp Adjustment	6D-11
	D12	Data Board Replacement	6D-16
	D13	Control Board Replacement	6D-17
	D14	Read Head Assembly Replacement	6D-18
	D15	Drive Motor Replacement	6D-22
	D16	Stacker Drive Assembly Replacement	6D-22
	D17	Clearing Card Jam	6D-24
	D18	Head Skew Adjustment	6D-25
	D19	Clearing the Card Reader	6D-28
	D20	Feed Solenoid Replacement	6D-29
	D21	Read Head Lamp Replacement	6D-32
	D22	Timing Lamp Replacement	6D-33
	D23	Throat Gap Adjustment	6D-33
	D24	Power Supply Replacement	6D-36
	D25	Card Reader/Line Printer Controller Replacement	6D-37
	D26	Hopper Empty Switch Replacement	6D-37
	D27	Feed Plate Adjustment/Check	6D-39
	D28	Timing Mask/Phototransistor Replacement	6D-41
	D29	Timing Disk Replacement	6D-41
	D30	Drive Belt Replacement	6D-41
	D31	Data and Sync Error Correction	6D-43
	D32	CRUT2 Informative Timing Routine Execution	6D-46
Console Display Procedures			6E-i
Contents			6E-i
	E1	Power Turn-On	6E-1
	E2	Power Turn-Off	6E-1
	E3	High-Voltage Transformer Removal/Replacement	6E-2
	E4	+15 V dc Regulator Replacement	6E-3
	E5	AC Entry Panel Replacement	6E-3
	E6	TEST MODE Switch Replacement	6E-4
	E7	MASTER CLEAR Switch Replacement	6E-4
	E8	Logic Module Printed Circuit Board Removal/Replacement	6E-5
	E9	Logic Module Card Cage Removal	6E-5
	E10	Switches and Indicators Replacement	6E-5
	E11	Printed Circuit Board Replacement	6E-5
	E12	Video Module Replacement	6E-7
	E13	Cathode-Ray Tube Replacement	6E-10
	E14	Horizontal and Vertical Alignment	6E-11
	E15	CRT Yoke Replacement	6E-12
	E16	Vertical Choke Replacement	6E-15
	E17	Bulk Power Supply Board Replacement	6E-15
	E18	Keyboard Replacement	6E-16
	E19	AC Entry Transformer Replacement	6E-16
	E20	Video Printed-Circuit Board Voltage Measurement	6E-18
	E21	Cabinet Hood Removal	6E-21
	E22	Measuring Low Voltages	6E 21
	E23	INTENSITY Control on Display Panel Check/Replacement	6E-22
	E24	Baud Rate Switches Check/ Replacement	6E-23
	E25	Keyboard Check	6E-25
	E26	Monitor Adjustments	6E-27
	E27	CHARACTER/LINE/BLOCK Switch Check/Replacement	6E-28
	E28	Two-Position Switches Check/ Replacement	6E-28
	E29	Audible Alarm Check/ Replacement	6E-29
	E30	Refresh Stability Adjustment	6E-29
Line Printer Procedures			6E-i
Contents			6E-i
	F1	Power Turn-On	6F-1
	F2	Power Turn-Off	6F-1
	F3	General Inspection and Cleaning	6F-3
	F4	Print Drum Inspection and Cleaning	6F-13
	F5	Lubrication	6F-13
	F6	Loading Diagnostic	6F-13
	F7	Ribbon Installation	6F-16
	F8	Forms Installation/Alignment	6F-18
	F9	Format Tape Installation	6F-20
	F10	Power Supply dc Voltage Test	6F-20
	F11	Power Supply Replacement	6F-22
	F12	AC Power Test	6F-23
	F13	Power Supply Fuse Test	6F-25
	F14	Mylar Ribbon Shield Replacement/Alignment	6F-26
	F15	Format Reader Brush Replacement	6F-28
	F16	Armature Striker Replacement	6F-28
	F17	Print Hammer Replacement	6F-31
	F18	Triac and Reed Relay Assembly Replacement	6F-31
	F19	Ribbon Gear Motor Replacement (Left Side)	6F-33
	F20	Ribbon Torque Motor Replacement (Right Side)	6F-35
	F21	Ribbon Tracking Test	6F 36
	F22	Control Panel Switch Replacement	6F-38
	F23	Logic Chassis Circuit Board Replacement	6F-39
	F24	Card Reader/Line Printer Controller Replacement	6F-40
	F25	Tractor Assemblies Replacement	6F-40
	F26	Vertical Forms Advancement Assembly Drive Belt Replacement	6F-42
	F27	Idler Pulley Drive Belt Replacement	6F-42
	F28	Clutch Pulley Drive Belt Replacement	6F-43
	F29	Horizontal Motion Drive Motor Replacement	6F-44
	F30	Print Drum Drive Belt Replacement	6F-44

F31 Print Drum Drive Motor Replacement 6F-44
F32 Print Density and Flight Time Adjustment 6F-44
F33 Circuit Board Potentiometer Adjustment 6F-46
F34 Hammer Drive Fuses Check and Replacement 6F-46
F35 Thermal Switch Replacement 6F-47
F36 +5 V dc Power Supply Adjustment 6F-49
F37 Format Reader Inspection 6F-49
F38 Format Reader Interlock Switch Adjustment/Replacement 6F-50
F39 Paper Tear and Out-of-Paper Switch Inspection 6F-50
F40 Paper Tear Switch Adjustment/Replacement 6F-52
F41 Out-of-Paper Switch Adjustment/Replacement 6F-53
F42 Gate Switch Check/Adjustment 6F-53
F43 Print Drum Interlock Switch Check 6F-56
F44 Print Drum Interlock Switch Replacement 6F-56
F45 6-Line/8-Line Switch Replacement 6F-56
F46 Logic Blower Motor Removal 6F 57
F47 Format Tape Preparation 6F-61

Magnetic Tape Transport Procedures 6G-i
Contents 6G-i
G1 Magnetic Tape Transport Cleaning 6G-1
G2 Diagnostic Loading and Execution 6G-3
G3 Subsystem Cable Inspection 6G-3
G4 Power Inspection and Checks 6G-3
G5 Loading Procedure 6G-7
G6 Logic Printed Circuit Board Replacement 6G-9
G7 Machine Reel Power Amplifier Replacement 6G-9
G8 File Reel Power Amplifier Replacement 6G-10
G9 Pneumatic Regulator Board Replacement 6G-13
G10 Vacuum Relay Replacement 6G-13
G11 Translator Board Replacement 6G-13
G12 Power Supply Replacement 6G-16
G13 Blower Assembly Removal 6G-17
G14 Blower Assembly Vacuum Adjustment 6G-18
G15 Upper Tape Tachometer (Machine Reel) Removal/Replacement 6G-18
G16 Machine Reel Tape Tachometer Alignment 6G-20
G17 Lower Tape Tachometer (File Reel) Removal/Replacement 6G-21
G18 File Reel Tape Tachometer Alignment 6G-21
G19 EOT/BOT Sensor Assembly Removal/Replacement 6G-21
G20 EOT/BOT Assembly Alignment 6G-24
G21 Fiber Optic Light Bulb Removal 6G-24
G22 Operators Panel Light Bulb Removal/Replacement 6G-25
G23 File Protect Sensor Assembly Removal/Replacement 6G-25
G24 File/Hub Removal/ Replacement 6G-27
G25 Controller Printed Circuit Board Replacement 6G-27
G26 Operators Panel Removal/Replacement 6G-27
G27 Power Distribution Box Components Check 6G-28
G28 Triac Power Switch Replacement 6G-28
G29 AC Line Filter Replacement 6G-28
G30 AC Power Sequencer Replacement 6G-28
G31 Power Distribution Box Circuit Breaker Check/Replacement 6G-30
G32 Power Distribution Box Switch Check/Replacement 6G-30
G33 Resistor Assembly Replacement 6G-30

Tape Cassette Transport Porcedures 6H-i
Contents 6H-i
H1 Cassette Cartridge Loading 6H-1
H2 Cassette Cartridge Unloading 6H-1
H3 Tape Cassette Transport Lubrication 6H-1
H4 Tape Cassette Transport Cleaning 6H-1
H5 Tape Wrap Removal 6H-3
H6 Tape Cassette Controller Replacement 6H-3
H7 Tape Cassette Transport Replacement 6H-4
H8 Cassette Power Supply Voltages Check 6H-4
H9 Tape Cassette Power Supply Replacement 6H-4

Storage Module Drive Procedures 6J-i
Contents 6J-i
J1 Power Turn-On 6J-1
J2 Power Turn-Off 6J-1
J3 Disk Pack Handling 6J-2
J4 Disk Pack Removal 6J-3
J5 Absolute Filter Replacement 6J-4
J6 Actuator Assembly Inspection Cleaning 6J-6
J7 Carriage Rails and Bearings Cleaning 6J-7
J8 Shroud and Spindle Cleaning 6J-7
J9 Lockshaft Cleaning/Lubricating 6J-7
J10 Interlock Check/Replacement 6J-9
J11 Blower Motor Replacement 6J-9
J12 Drive Belt Replacement/Adjustment 6J-12
J13 Drive Motor Replacement 6J-13
J14 Hysteresis Brake Placement 6J-14
J15 Brake Plate (Spindle Lock) Replacement 6J-15
J16 Heads Loaded Switch Adjustment/Replacement 6J-15
J17 Control/Indicator Panel Replacement 6J-18
J18 Logic Board Replacement 6J-18
J19 Servo Pre-Amplifier Replacement 6J-19
J20 Static Ground Spring Adjustment/Replacement 6J-19
J21 Power Supply Voltage Tests 6J-21

Procedure No.		Page No.
J22	Interlock Control Board Replacement	6J-21
J23	Relay and Brush Control Replacement	6J-22
J24	Read Pre-Amplifier Board Replacement	6J-24
J25	Write Board Replacement	6J-24
J26	Disk Adapter Replacement/ Installation	6J-27
J27	Control Unit Logic Board (Position 07 to 29) Replacement	6J-27
J28	Control Unit Maintenance Panel Replacement	6J-27
J29	Control Unit 5 V dc Power Supply Replacement	6J-29
J30	Control Unit Circuit Breaker Replacement	6J-30
J31	Control Unit Cooling Fan Replacement	6J-30
J32	Control Unit Air Filter Cleaning	6J-31
J33	Drive Interface Signal Cable Check	6J-31
J34	Control Unit Power Fail Detect Card Replacement	6J-31
J35	Sector Plug Replacement	6J-31
J36	Read/Write Head Alignment	6J-33

Flexible Disk Drive Procedures 6K-i

Contents 6K-i

K1	Power Turn-On	6K-1
K2	Power Turn-Off	6K-1
K3	Diskette Loading	6K-1
K4	Diskette Removal/Handling Recommendations	6K-1
K5	Power Supply Voltages Check	6K-1
K6	24 V dc Power Supply Replacement	6K-3
K7	5 V dc Power Supply Replacement	6K-3
K8	Head Cleaning	6K-3
K9	Flexible Disk Drive Replacement	6K-4
K10	Flexible Disk Drive Controller Replacement	6K-4

Procedure No.		Page No.
Q49	Track Indicator Check	6Q-33
Q50	Cartridge Disk Drive Controller Replacement/ Installation	6Q-33
Magnetic Tape Transport Procedures		6R-i
Contents		6R-i
R1	Magnetic Tape Transport Cleaning	6R-1
R2	Diagnostic Loading and Execution	6R-4
R3	Subsystem Cable Inspection	6R-4
R4	Power Inspection and Checks	6R-4
R5	Loading Procedure	6R-9
R6	Logic Printed Circuit Board Replacement	6R-11
R7	Machine Reel Power Amplifier Replacement	6R-14
R8	File Reel Power Amplifier Replacement	6R-14
R9	Pneumatic Regulator Board Replacement	6R-14
R10	Vacuum Relay Replacement	6R-17
R11	Formatter Power Supply Replacement	6R-17
R12	Transport Power Supply Replacement	6R-20
R13	Blower Assembly Removal	6R-20
R14	Blower Assembly Vacuum Adjustment	6R-22
R15	Upper Tape Tachometer {Machine Reel} Removal/Replacement	6R-23
R16	Machine Reel Tape Tachometer Alignment	6R-25
R17	Lower Tape Tachometer {File Reel} Removal/Replacement	6R-25
R18	File Reel Tape Tachometer Alignment	6R-27
R19	EOT/BOT Sensor Assembly Removal/Replacement	6R-27
R20	EOT/BOT Assembly Alignment	6R-27
R21	Fiber Optic Light Bulb Removal	6R-30
R22	Operators Panel Light Bulb Removal/Replacement	6R-30
R23	File Protect Sensor Assembly Removal/ Replacement	6R-30
R24	File/Hub Removal/ Replacement	6R-33
R25	Controller Printed Circuit Board Replacement	6R-33
R26	Operators Panel Removal/ Replacement	6R-33
R27	Power Distribution Box Components	6R-34
R28	Triac Power Switch Replacement	6R-35
R29	AC Line Filter Replacement	6R-35
R30	AC Power Sequencer Replacement	6R-35
R31	Power Distribution Box Circuit Breaker Check/ Replacement	6R-36
R32	Power Distribution Box Switch Check/Replacement	6R-36
R33	Resistor Assembly, 2K Ω, 50W Replacement	6R-37
Card Reader/Line Printer/Communications Line Adapter Procedures		6S-i
Contents		6S-i
S1	CR/LP/CLA Installation/Replacement	6S-1
Line Printer Procedures		6T-1

7. MAINTENANCE AIDS 7-1

Processor 7A-1
Diagnostics 7A-1
Test Equipment 7A-1
Breakpoint Panel 7B-1
Communications Line Adapter 7C-1
Diagnostics 7C-1
Card Reader 7D-1
Diagnostics 7D-1
Test Equipment 7D-1
Troubleshooting 7D-4
Error Indicators 7D-4
Interface Signals 7D-4
Input Signals 7D-4
Output Signals 7D-8
Console Display 7E-1
Diagnostics 7E-1
Test Equipment 7E-1
Mode Selection 7E-1
Line Printer 7F-1
Diagnostics 7F-1
Test Equipment 7F-1
Magnetic Tape Transport 7G-1
Diagnostics 7G-1
Test Equipment 7G-1
Tape Cassette Transport 7H-1
Diagnostics 7H-1
Test Equipment 7H-1
Storage Module Disk Drive 7J-1
Diagnostics 7J-1
Test Equipment 7J-1
Flexible Disk Drive 7K-1
Diagnostics 7K-1
Test Equipment 7K-1
Keyboard Display 7L-1
Diagnostics 7L-1
Test Equipment 7L-1
Communication Multiplexer 7M-1
Diagnostics 7M-1
Test Equipment 7M-1
1X8 Communications Line Adapter 7N-1
Diagnostics 7N-1
Matrix Printer 7P-1
Cartridge Disk Drive 7Q-1
Diagnostics 7Q-1
Magnetic Tape Transport 7R-1
Diagnostics 7R-1
Test Equipment 7R-1
Card Reader/Line Printer/
Communication Line Adapter 7S-1
Line Printer 7T-1
Diagnostics 7T-1
Test Equipment 7T-1

8. PARTS DATA 8-1

Processor, Cabinet, and Operators Panel 8A-1
Breakpoint Panel 8B-1
Communications Line Adapter 8C-1
Card Reader 8D-1
Console Display 8E-1
Line Printer 8F-1
Magnetic Tape Transport 8G-1
Tape Cassette Transport 8H-1
Storage Module Drive 8J-1
Flexible Disk Drive 8K-1
Keyboard Display Terminal 8L-1
Communications Multiplexer 8M-1
1X8 Communications Line Adapter 8N-1
Matrix Printer 8P-1
Cartridge Disk Drive 8Q-1
Magnetic Tape Transport 8R-1
Line Printer 8T-1

FIGURES

Fig. No.		Page No.
6A-1	Power Distribution Box	6A-1
6A-2	Cabinet Filter Assembly	6A-2
6A-3	POWER ON/OFF Switch	6A-3
6A-4	Processor Cooling Fans	6A-3
6A-5	Cooling Fan Assembly	6A-3
6A-6	±5 V dc Test Points	6A-4
6A-7	+5 V dc Power Supply and Housing	6A-5
6A-8	12 V dc Power Supply Test Points and Adjustments	6A 7
6A-9	±15/±12 V dc Power Supply and Housing	6A-8
6A-10	-9 V dc Power Supply Test Points	6A-9

Figure No.		Page No.
6G-12	Pneumatic Assembly Showing Vacuum Regulator and Vacuum Relay	6G-14
6G-13	Vacuum Relay Replacement Via the Cabinet Latch Screw	6G-15
6G-14	Translator Board and Power Supply	6G-16
6G-15	Blower Assembly	6G-17
6G-16	Vacuum Gauge Installation	6G-19
6G-17	Upper Tape Tachometer	6G-20
6G-18	Machine Reel Tape Sensor Alignment	6G-21
6G-19	Lower Tape Tachometer	6G-22
6G-20	File Reel Tape Sensor Alignment	6G-23
6G-21	End-of-Tape/Beginning-of-Tape Sensor Assembly	6G-23
6G-22	End-of-Tape/Beginning-of-Tape Assembly	6G-24
6G-23	Fiber Optic Light Bulb	6G-25
6G-24	Magnetic Tape Transport Operator Panel Indicators	6G-26
6G-25	File Protect Sensor Assembly and File Hub	6G-26
6G-26	Power Distribution Box Assembly	6G-29
6H-1	Tape Cassette Tape Cartridge	6H-1
6H-2	Tape Cassette Transport	6H-1
6H-3	Tape Cassette Transport Lubrication Points	6H-2
6H-4	Tape Cassette Transport Cleaning Points	6H-2
6H-5	Tape Cassette Transport Controller Switches	6H-3
6H-6	Tape Cassette Transport Mounting Detail	6H-4
6H-7	Tape Cassette Power Supply Voltage Test Points	6H-5
6J-1	Storage Module Drive Physical Characteristics	6J-1
6J-2	Disk Pack Installation	6J-2
6J-3	Deck Support Bracket	6J-4
6J-4	Deck Rear Hold-Down Screw	6J-5
6J-5	Absolute Filter Assembly	6J-5
6J-6	Actuator Elements (Heads Extended)	6J-6
6J-7	Carriage Rails and Bearings	6J-7
6J-8	Deck Assemblies	6J-8
6J-9	Spindle Assembly	6J-9
6J-10	Control Interlocks	6J-10
6J-11	Storage Module Drive Deck Support Bracket	6J-11
6J-12	Blower Motor Replacement	6J-12
6J-13	Drive Motor Assembly	6J-13
6J-14	Hysteresis Brake Assembly	6J-15
6J-15	Brake Plate Assembly	6J-16
6J-16	Heads Loaded Switch	6J-17
6J-17	Servo Pre-Amplifier	6J-18
6J-18	Control Panel Assembly	6J-19
6J-19	Printed Circuit Board Chassis Map	6J-20
6J-20	Static Ground Spring Assembly	6J-20
6J-21	Storage Module Drive Power Supply	6J-22
6J-22	Interlock Control Board	6J-23
6J-23	Relay and Brush Control Board	6J-24
6J-24	Read Pre-Amplifier Board	6J-25
6J-25	Write Board Assembly	6J-26
6J-26	Control Unit Physical Characteristics	6J-27
6J-27	Control Unit Logic Board Chassis Map	6J-28
6J-28	Control Unit Maintenance Panel	6J-29
6J-29	Power Supply Assembly	6J-30
6J-30	Storage Module Drive Sector Plug	6J-32
6K-1	Disk Installation	6K-2
6K-2	Flexible Disk Drive dc Power Supplies Test Points	6K-4
6K-3	Flexible Disk Drive Mounting	6K-5
6M-1	Typical CYBER 18-30 Timeshare Configuration	6M-16
6M-2	Typical Communication Multiplexer Block Diagram	6M-17
6M-3	Typical LM Card Cage Assembly	6M-18
6M-4	Location of Loop Multiplexer and Typical CLA	6M-19
6M-5	Loop Multiplexer Circuit Card Controls and Indicators	6M-20
6M-6	ACLA Circuit Card	6M-21
6M-7	Typical ACLA Cables	6M-22
6M-8	MLIA 20utput Loop Interface Circuit Card Indicators	6M-23
6M-9	Power Indicator	6M-24
6M-10	CYBER 18-30 Timeshare Printed Wiring Assembly Slot Assignments	6M-25
6M-11	Rear View of COMMUX Subsystem Card Cage Showing Voltage Strips	6M-26
6M-12	Loop Mux Card Cage Power Supply Location	6M-27
6M-13	Rear View of Loop Mux Card Cage & Card Cage Power Supply	6M-28
6M-14	Top View of the Loop Mux Card Cage Power Supply	6M-29
6N-2	Cable Adapter Paddle Board	6N-2
6P-1	RS-232 Interface Board	6P-1
6P-2	I/O Connector Signal Jumper	6P-2
6Q-1	Filter Mounting	6Q-3
6Q-2	Front Panel Removal	6Q-5
6Q-3	Fixed Disk Removal	6Q-6
6Q-4	Module Locator (below deck)	6Q-9
6Q-5	Packlock and Brush Assemblies	6Q-12
6Q-6	Power Supply Assembly	6Q-16
6Q-7	Module Location (Above Deck)	6Q-18
6Q-8	Track Indicator	6Q-19

Figure No.		Page No.
6R-1	Magnetic Tape Transport Tape Drive Front View	6R-1
6R-2	Magnetic Tape Transport Tape Load Path	6R-2
6R-3	Formatter Physical Configuration	6R-3
6R-4	Magnetic Tape Transport Cabinet Latch Screw	6R-6
6R-5	Magnetic Tape Transport-to-Formatter to Controller Signal Cable Connections	6R-7
6R-6	Magnetic Tape Transport-to-Formatter to Controller Signal Cable Connections	6R-8
6R-7	Transport Assembly, Rear View	6R-9
6R-8	Interlock Switch	6R-10
6R-9	Tape Load Path	6R-10
6R-10	Cabinet Latch Screw	6R-11
6R-11	Printed Circuit Board Assembly	6R-12
6R-12	Tape Deck Latch Screw and Vacuum Regulator	6R-15
6R-13	Pneumatic Assembly Showing Vacuum Regulator and Vacuum Relay	6R-16
6R-14	Vacuum Relay Replacement Via the Cabinet Latch Screw	6R-17
6R-15A	Formatter Power Supply Replacement	6R-18
6R-15B	Formatter Power Supply Grounding	6R-19
6R-16	Blower Assembly	6R-21
6R-17	Vacuum Gauge Installation	6R-22
6R-18	Upper Tape Tachometer	6R-24
6R-19	Machine Reel Tape Sensor Alignment	6R-25
6R-20	Lower Tape Tachometer	6R-26
6R-21	File Reel Tape Sensor Alignment	6R-27
6R-22	End-of-Tape/Beginning-of-Tape Sensor Assembly	6R-28
6R-23	End-of-Tape/Beginning-of-Tape Assembly	6R-29
6R-24	Fiber Optic Light Bulb	6R-31
6R-25	Magnetic Tape Transport Operator Panel Indicators	6R-31
6R-26	File Protect Sensor Assembly and File Hub	6R-32
6S-1	Card Reader/Line Printer/Communication Line Adapter Controller	6S-1
7D-1	End-of-Deck Card	7D-1
7D-2	General Data Card	7D-2
7D-3	Read Adjust Card	7D-2
7D-4	Sync Adjust Card	7D-3
7D-5	Skew Adjust Card	7D-3
7D-6	Amplifier Setting Card	7D-4
7D-7	I/O Cable Pin Assignment	7D-7
7E-1	Console Display Mode Select-Switches	7E-1

TABLES

Table No.		Page No.
6A-1	+5 V dc Power Supply and ±15/±12 V dc Power Supply Interconnecting Wires	6A-6
6A-2	Test Voltage Readings	6A-7
6A-3	Test Voltage Readings (Not Loaded)	6A-8
6A-4	Test Voltage Readings (Loaded)	6A-9
6A-5	-9 V dc Power Supply Voltage Adjustment	6A-11
6A-6	System MOS Memory Configuration	6A-26
6A-7	MOS Memory Run Parameters	6A-27
6A-8	Error Correction Code Run Parameters	6A-28
6A-9	Card Reader/Line Printer Controller Jumper Settings and Equipment Codes	6A-28
6A-10	Card Reader/Line Printer Diagnostic Parameter Changes	6A-29
6A-11	Communications Line Adapter Backplane Jumper Connections	6A-30
6A-12	Card Reader Controller Backplane Jumper Connections	6A-30
6A-13	Line Printer Controller Backplane Jumper Connections	6A-31
6A-14	Storage Module Drive Controller Backplane Jumper Connections	6A-32
6A-15	Interrupt Assignments	6A-35
6D-1	Data Errors and Fault Isolation	6D-45
6F-1	Cable Connector Locations	6F-3
6F-2	Drive Belt Locations	6F-12
6F-3	Line Printer Lubrication	6F-13
6F-4	Hammer Driver Boards	6F-39
7A-1	Diagnostic Part Numbers, ODS Version 1.1	7A-1
7A-2	Function Control Register (FCR)	7A-2
7A-3	Display Code Definitions	7A-3
7D-1	Error Indicators	7D-4
7D-2	Troubleshooting Guide	7D-5
7E-1	Page Mode	7E-3
7E-2	Scroll Mode	7E-3
8A-1	Parts Data for Processor, Cabinet and Operators Panel	8A-1
8B-1	Parts Data for Breakpoint Panel	8B-1
8C-1	Parts Data for Communications Line Adapter	8C-1
8D-1	Parts Data for Card Reader	8D-1
8E-1	Parts Data for Console Display	8E-1
8F-1	Parts Data for Line Printer	8F-1
8G-1	Parts Data for Magnetic Tape Transport	8G-1
8H-1	Parts Data for Tape Cassette Transport	8H-1
8J-1	Parts Data for Storage Module Drive	8J-1
8K-1	Parts Data for Flexible Disk Drive	8K-1
8N-1	Parts Data For 1 x 8 Channel Communications Line Adapter	8N-1
8R-1	Parts Data For Magnetic Tape Subsystem	8R-1
8R-2	Card Placement Chart	8R-4
8S-1	List of replacable assemblies and their parts number	8S-1

PROCESSOR PROCEDURES

CONTENTS

6A

Procedure		Page
A1	Visual Inspection	6A-1
A2	Fan Filter Cleaning	6A-2
A3	Power Turn-On	6A-2
A4	Power Turn-Off	6A-2
A5	Cooling Fans Check	6A-2
A6	Cooling Fan Replacement	6A-3
A7	dc Power Supply Check (L H Research)	6A-4
A7.1	+5 V dc Power Supply Check (Scott)	6A-4
A8	dc Power Supply Replacement (L H Research)	6A-5.1
A8.1	+5 V dc Power Supply Replacement (Scott)	6A-5.2
A9	±15 V/±12 V dc Power Supply Check	6A-6
A10	±15 V/±12 V dc Power Supply Replacement	6A-7
A11	-9 V dc Power Supply Check	6A-9
A12	-9 V dc Power Supply Replacement	6A-10
A13	Power Distribution Box Components Check	6A-11
A14	AC Line Filter Replacement	6A-11
A15	Surge Current Limiter Board Replacement	6A-14
A16	Power Distribution Box Circuit Breaker Check/Replacement	6A-14
A17	Power Distribution Box Resistor Assembly Replacement	6A-14
A18	Triac Power Switch Replacement	6A-14
A19	POWER ON/OFF Switch Check/ Replacement	6A-19
A20	Operators Panel Printed Circuit Board Replacement	6A-19
A21	Operators Panel Switch and Bezel Replacement	6A-20
A22	Dual-Processor Multiplexer Printed Wiring Assembly Replacement	6A-21
A23	Logic Board Replacement	6A-21
A24	MOS Memory Board Replacement	6A-21
A25	Memory Interface Board Replacement	6A-25
A26	MOS Main Memory Run Parameters	6A-26
A27	Using CRECO Diagnostic with Multiple Subsystems	6A-28
A28	Multiple Subsystem Testing	6A-29
A29	Equipment Code Change, Level 1	6A-33
A30	Equipment Code Change, Level II	6A-34
A31	Micro and Macro Interrupt Assignment Change, Level I	6A-34
A32	Micro and Macro Interrupt Assignment Change, Level II	6A-36
A33	Loading Diagnostic Cards with Card Reader	6A-36
A34	Memory Parity Error Cleaning	6A-37
A35	Run Parameters for Micro Memory Test	6A-38
A36	Run Parameters for Cassettes and Diskettes in non-standard system configurations	6A-40

Figure		Page
6A-1	Power Distribution Box	6A-1
6A-2	Cabinet Filter Assembly	6A-2
6A-3	POWER ON/OFF Switch	6A-3
6A-4	Processor Cooling Fans	6A-3
6A-5	Cooling Fan Assembly	6A-3
6A-6	±5 V dc Test Points	6A-4
6A-7	+5 V dc Power Supply and Housing	6A-5
6A-8	12 V dc Power Supply Test Points and Adjustments	6A-7
6A-9	±15/±12 V dc Power Supply and Housing	6A-8
6A-10	-9 V dc Power Supply Test Points	6A-9
6A-11	-9 V dc Power Supply	6A-10
6A-12	Power Distribution Box Assembly	6A-12
6A-13	AC Line Filters	6A-13
6A-14	Surge Current Limiter Board	6A-15
6A-15	Power Distribution Box Circuit Breaker	6A-16
6A-16	Power Distribution Box Resistor Assembly	6A-17
6A-17	Triac Power Switch	6A-18
6A-18	Processor POWER ON/OFF Switch	6A-19
6A-19	Operators Panel Assembly	6A-20
6A-20	Dual Processor Multiplexer Assembly	6A-22
6A-21	Logic Board Location	6A-23
6A-22	Memory Board Location	6A-24
6A-23	Memory Interface Location	6A-25

Table		Page
6A-1	+5 V dc Power Supply and ±15/±12 V dc Power Supply Interconnecting Wires	6A-6
6A-2	Test Voltage Readings	6A-7
6A-3	Test Voltage Readings (Not Loaded)	6A-8
6A-4	Test Voltage Readings (Loaded)	6A-9
6A-5	-9 V dc Power Supply Voltage Adjustment	6A-11
6A-6	System MOS Memory Configuration	6A-26
6A-7	MOS Memory Run Parameters	6A-27
6A-8	Error Correction Code Run Parameters	6A-28
6A-9	Card Reader/Line Printer Controller Jumper Settings and Equipment Codes	6A-28
6A-10	Card Reader/Line Printer Diagnostic Parameter Changes	6A-29

96768683 - 02

Table		Page
6A-11	Communications Line Adapter Backplane Jumper Connections	6A-30
6A-12	Card Reader Controller Backplane Jumper Connections	6A-30
6A-13	Line Printer Controller Backplane Jumper Connections	6A-31
6A-14	Storage Module Drive Controller Backplane Jumper Connections	6A 32
6A-15	Interrupt Assignments	6A-35

A1 VISUAL INSPECTION

To inspect the processor, perform the following:

1. Open the cabinet right side panel for access to processor 1 or left side panel for access to processor 2. Remove the processor cover plate (front panel) by releasing the two captive fasteners.
2. Check that the logic board identifications (labeled at the front of the printed circuit board edge) agree with the board placement table (table 4A-3).
3. Check that all logic boards in the processor chassis are properly seated in their connectors by applying firm thumb pressure at the upper and lower corners of each logic board.
4. At the card reader/line printer controller, verify that the card feed switch is off (pointing toward the operator).
5. Remove the cabinet front panel unlatch and swing down the equipment mounting frame.
6. Check that all peripheral interconnection cables are correctly and fully connected to the processor backplane pins at their respective controller locations. Verify that the cable shields and cable clamps are installed. (See the CYBER 18 Computer Systems Installation Manual.)
7. Check that the circuit breaker on the power distribution box (figure 6A-1) is set on
8. Check that power supply fuses and circuit breakers are on and not blown.
9. Check the power supply fans by momentarily turning the power on (procedures A3 and A4).
10. Check that the processor cooling fans are operational (procedure A5).
11. Close and latch the equipment mounting frame. Replace and secure the cabinet front panel(s).

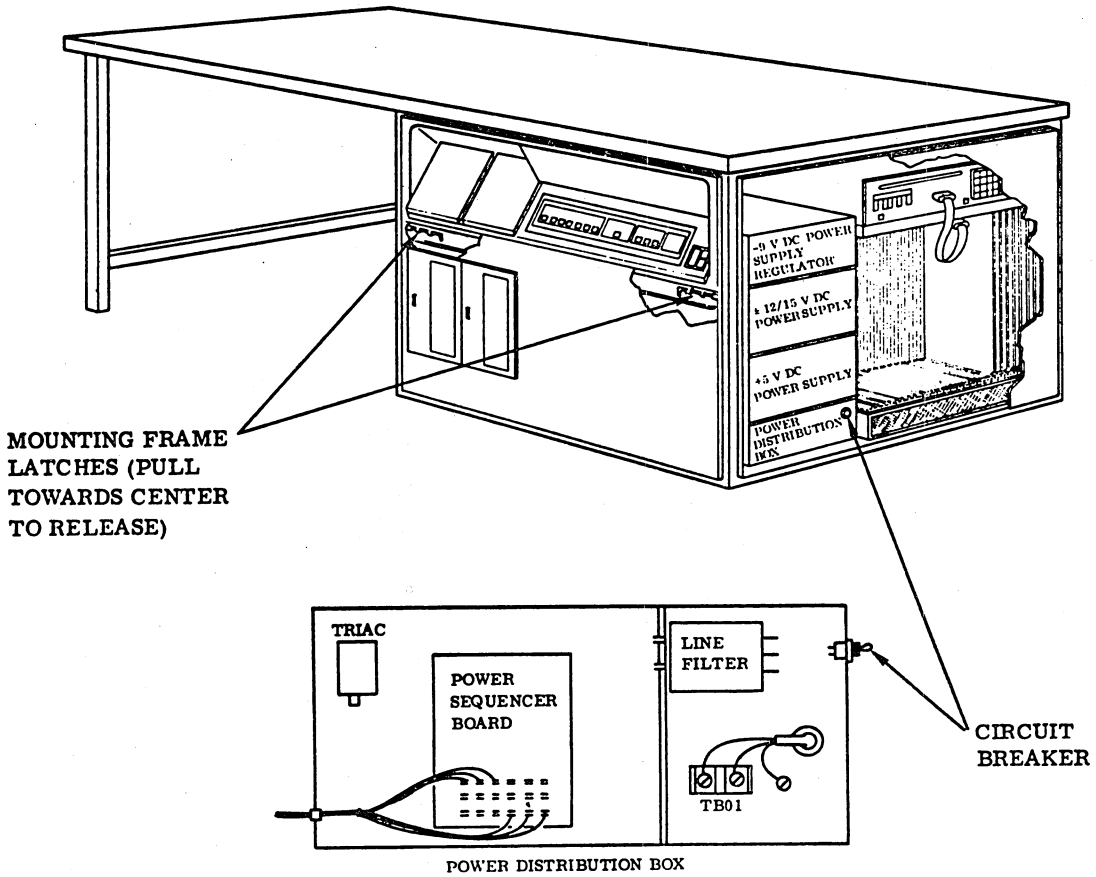

NOTE: IN A DUAL-CPU SYSTEM, THIS POWER DISTRIBUTION BOX IS LOCATED ON THE OPPOSITE CORNER OF THE CABINET.

Figure 6A-1. Power Distribution Box

A2 FAN FILTER CLEANING

To clean the fan filter, perform the following:

1. Remove the cabinet right side panel for access to processor 1 or the left side panel for access to processor 2.
2. Remove the filter from the chassis (see figure 6A-2 for filter location). Use a vacuum cleaner to clean the front and back surfaces of the filter.
3. Check that the filter has been properly cleaned by holding the filter up to a light. No obvious dark areas should be seen. If it cannot be adequately cleaned, replace the filter.
4. Restore the filter to its housing. Replace and secure the cabinet side panel(s).

A3 POWER TURN-ON

To turn the power on (figure 6A-3), perform the following:

1. Check that the ac power cord from the processor cabinet power distribution box is connected to the site power outlet.
2. If the processor is being turned on for the first time, refer to procedures A7, A9, and A11 to verify that the voltages are within tolerance.
3. Place the POWER ON/OFF switch located on the operators panel to the ON position. The POWER ON indicator should illuminate. If the POWER ON indicator does not illuminate, replace the lamp. If the indicator still does not illuminate, refer to procedures A7, A9, and A11 to check the power supplies.

A4 POWER TURN-OFF

To turn the power off (figure 6A-3), perform the following:

1. Press STOP and MASTER CLEAR on the operators panel.
2. Place the operators panel POWER ON/OFF switch in the OFF position.

A5 COOLING FANS CHECK

To check the cooling fans (figure 6A-4), perform the following:

1. Remove the cabinet right side panel for access to processor 1 or the left side panel for access to processor 2. Remove the cabinet filter (see figure 6A-2 for filter location).
2. Insert an inspection mirror into the air intake opening. Do not touch the running fan blades.
3. Direct the light from a flashlight into the mirror while angularly directing the mirror toward one of the six cooling fans.
4. Verify that the fan blades are in motion.
5. Repeat steps 3 and 4 for all six cooling fans.
6. Replace the cabinet filter.

TYPICAL CYBER 18-20 SYSTEM

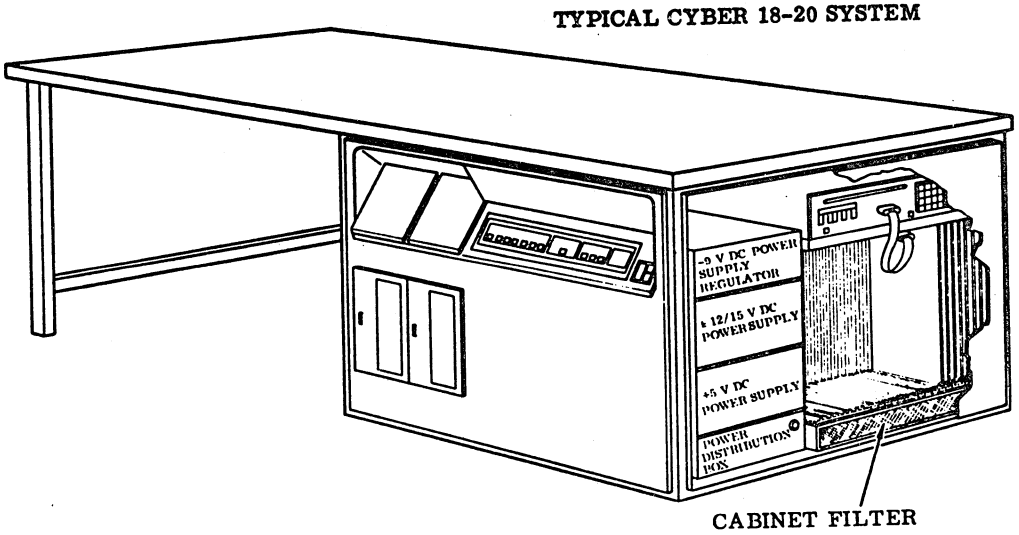

NOTE: IN A DUAL-CPU SYSTEM, THE SECOND CPU IS LOCATED ON THE OPPOSITE SIDE.

Figure 6A-2. Cabinet Filter Assembly

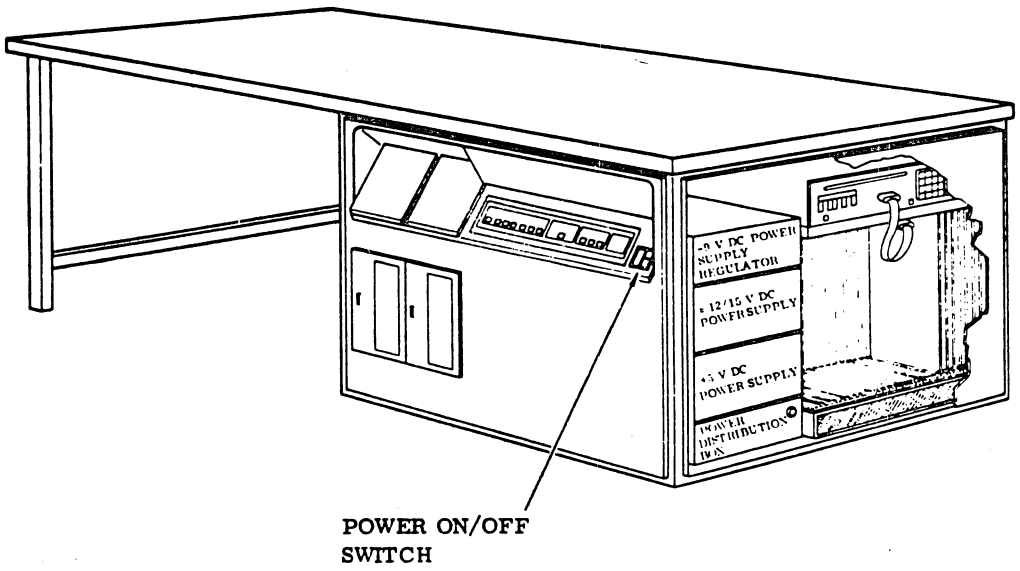

Figure 6A-3. POWER ON/OFF Switch

7. Check that air is being exhausted from both the power supplies. If it is not, replace the power supplies (procedures A8 and A10).

8. Replace and secure the cabinet side panel(s).

A6 COOLING FAN REPLACEMENT

To replace the cooling fan (figure 6A-5), perform the following:

1. Turn the power off (procedure A4).

2. Remove the cabinet right side panel for access to processor 1 or left side panel for access to processor 2.

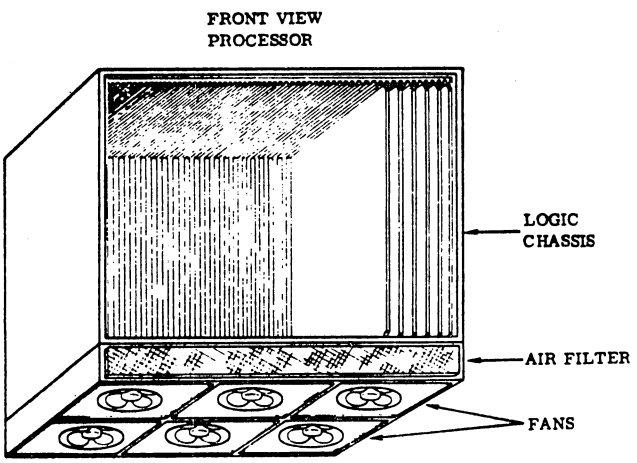

Figure 6A-4. Processor Cooling Fans

3. Remove the cabinet filter (see figure 6A-2 for filter location).

4. Using either a 1/4-inch open-end wrench, a 1/4-inch spin-tight wrench, or a Phillips head screwdriver, remove the two screws holding the cooling fan to be replaced.

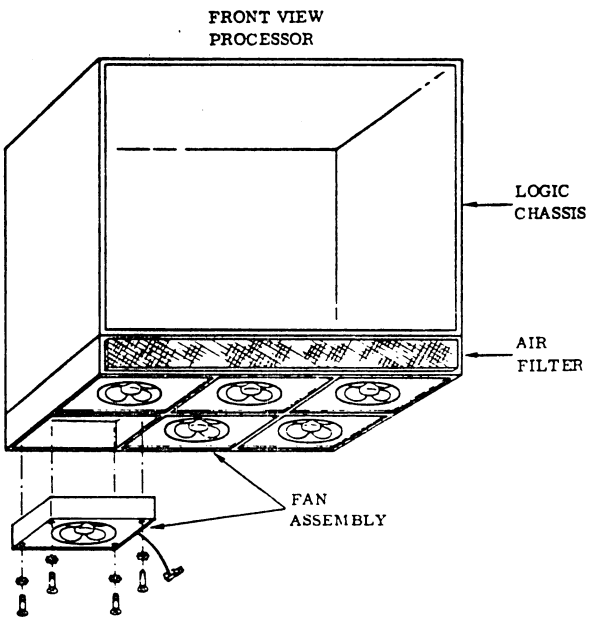

Figure 6A-5. Cooling Fan Assembly

5. Remove the power connect plug to the cooling fan.

6. Remove the screws and the fan grill from the old fan.

7. Before inserting the new fan into the chassis, orient the new fan so that the air flow notation arrows on the fan are pointing upward.

8. Insert the new fan and connect it to the power plug.

9. Install the fan grill and the screws on the fan, and fasten the assembly to the chassis.

10. Turn the power on (procedure A3), and verify proper operation (procedure A5).

11. Replace the cabinet filter and cabinet panel(s).

A7 DC POWER SUPPLY CHECK (L H RESEARCH)

To check the dc power supply (see figure 6A-7), perform the following:

1. Remove the cabinet front snap-on panel(s). Unlatch and swing down the equipment mounting frame (see figure 6A-1).

2. Remove the cabinet side panel(s) and check that the cabinet blowers are running by detecting the air flow through the processor logic chassis. If they are not running, check the power connection to the site outlet.

3. Set a multimeter to a dc voltage range capable of clearly displaying 5 V dc. Connect the negative lead of the multimeter to the -V1 terminal and the positive lead to the +V1 terminal. The meter should read 5 V + 0.25 V. If the voltage is not correct (low), adjust the V1 ADJ potentiometer (a clockwise turn increases the voltage) until the correct level is attained. Connect the negative lead to -V4 and the positive lead to +V4. The meter should read 5 V ± 0.25 V. If the voltage is not correct, adjust the V4 ADJ potentiometer. Set the multimeter to a dc range capable of clearly displaying 12 V dc. Connect the negative lead to -V2 and the positive lead to +V2. The meter should read 12 V + 0.6 V. If the voltage is not correct, adjust the V2 ADJ potentiometer. Connect the negative lead to -V3 and the positive lead to +V3. The meter should read 12 V + 0.6 V. If the voltage is not correct, adjust the V3 ADJ potentiometer. If the power supply cannot be adjusted, replace the power supply (procedure A8).

4. If the system has a dual processor, remove the rear cabinet panel and repeat the test on the second power supply. Replace and secure the equipment mounting frame and cabinet panels.

A7.1 +5 V dc POWER SUPPLY CHECK (SCOTT)

To check the +5 V dc power supply (see figure 6A-6), perform the following:

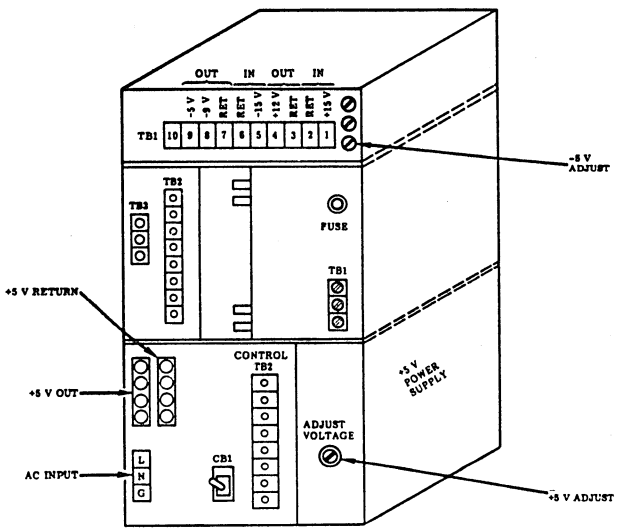

Figure 6A-6. ±5 V dc Test Points

1. Remove the cabinet front panel(s). Unlatch and swing down the equipment mounting frame (see figure 6A-1).

2. Verify that the +5 V dc power supply circuit breaker (CB1) is on.

3. Remove the cabinet side panel(s) and check that the cabinet blowers are running by detecting the air flow through the processor logic chassis. If they are not running, check the power connection to the site outlet.

4. Set a multimeter to a dc voltage range capable to clearly displaying 5 V dc.

5. Connect the negative lead of the multimeter to the +5 V RTN terminal and the positive lead to the +5 V OUT terminal. The meter should read 5 V dc ± 0.25 V dc. If the voltage is not correct (low), adjust the VOLT ADJ potentiometer (a clockwise turn increases the voltage) until the correct level is attained. If the power supply cannot be adjusted, replace the +5 V dc power supply (procedure A8).

6. If the system has a dual processor, remove the rear cabinet panel and repeat the test on the second power supply. Replace and secure the equipment mounting frame and cabinet panels.

A8 DC POWER SUPPLY REPLACEMENT (L H RESEARCH)

To replace the power supply (figure 6A-7), perform the following:

1. Turn the power off (procedure A4) and disconnect the power cord from the primary source.

2. Remove the front and side panels. Unlatch and swing down the equipment mounting frame for processor 1.

3. Remove rear and left side panels for processor 2.

4. Set a multimeter to a range capable of displaying 120 V ac. Connect the negative lead of the multimeter under the cover plate of TB1 on the power supply terminal 9 (figure 6A-7). Connect the positive lead of the multimeter through the cover plate of TB1 to terminal 8.

   NOTE: The multimeter should read zero voltage. If the multimeter does not read zero voltage, recheck the input ac power cord and disconnect it from the site power source.

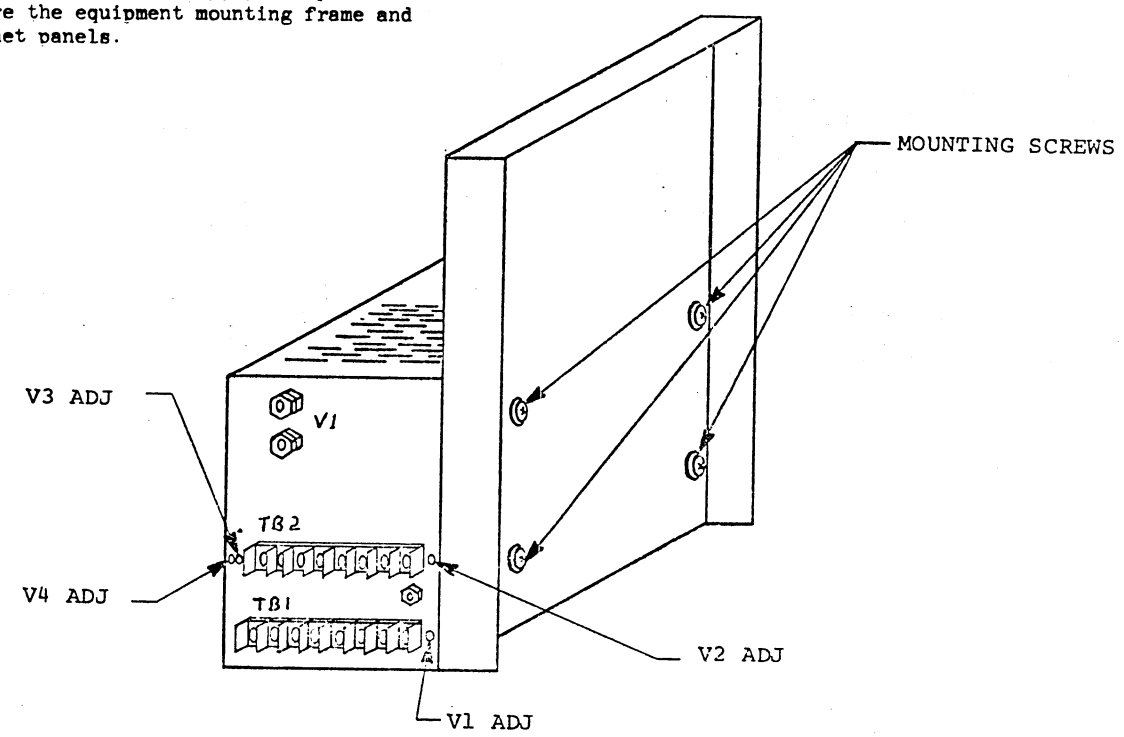

Figure 6A-7. Power Supply and Housing

5. Attach stick-on labels to the lugged wires connected to the +V1 and -V1 terminals. Identify (on the labels) the terminating location of each wire.

6. Remove the lugged wires from the +V1 and -V1 terminals using either a 1/2 inch open-end or spin-tight wrench.

7. Remove each wire of TB1, labeling it with its previous terminal location as it is removed.

8. Remove each wire of TB2, labeling it with its previous location as it is removed.

9 Remove the four mounting screws from the power supply housing assembly.

10. Remove the power supply from its housing.

11. Install the new power supply into the housing in the same orientation as the one that was removed.

12. Reconnect wires removed in Step 7.

13. Turn the power on (procedure A3) and connect the negative lead of the multimeter, set to a range of displaying 10 V dc, to the -V1 terminal. Connect the positive lead of the multimeter to the +V1 terminal. The meter should read no greater than 5.5 V dc. If the meter reads greater than 5.5 V dc, adjust the V1 ADJ potentiometer on the power supply counterclockwise until a level of 5.5 V dc is attained.

14. Turn the power off (procedure A4) and connect the lugged wires (step 6) to the +V1 and -V1 terminals of the power supply. Ensure that the screws are tightened on the terminal.

15. Turn the power on (procedure A3) and again measure the voltage between the +V1 and -V1 terminals. Adjust the V1 ADJ potentiometer on the power supply until a level of 5 $\pm$ 0.25 V dc is attained. If the power supply cannot be adjusted, it may be necessary to get technical assistance.

16. Connect the negative lead to -V2 and the positive lead to +V2. The meter should read no greater than 13.0 V dc. If the meter reads greater than 13.0 V dc, adjust the V2 ADJ potentiometer clockwise until a level of 13.0 V dc is attained. Repeat for V3 (no greater than 13.0 V dc) and V4 (no greater than 5.5 V dc).

17. Turn power off (procedure A4) and reconnect wires removed from TB2 (Step 8).

18. Turn power on (procedure A3) and do power supply check (procedure A7) on V2, V3, and V4.

19. Disconnect the multimeter leads, replace the cover, and replace the cabinet panels

20. Continue the DDLT testing sequence.

A8.1 +5 V dc POWER SUPPLY REPLACEMENT (SCOTT)

To replace the +5 V dc power supply (figure 6A-7.1), perform the following:

1. Turn the power off (procedure A4), and disconnect the power cord from the primary source.

2. Remove the cabinet front and side panels. Unlatch and swing down the equipment mounting frame for processor 1.

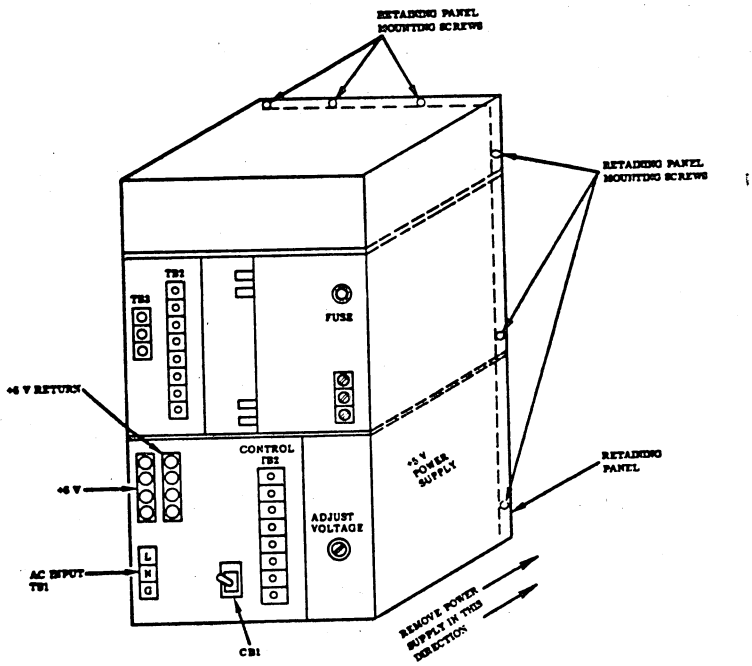

Figure 6A-7.1. +5 V dc Power Supply and Housing

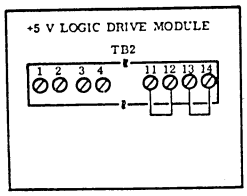

Figure 6A-7.2. Remote Sense Jumpers

3. Remove the rear and left side panels for processor 2.

4. Set a multimeter to a range capable of displaying 120 V ac. Connect the negative lead of the multimeter through the cover plate of TB1 on the +5 V dc power supply to terminal 3 (figure 6A-7.1). Connect the positive lead of the multimeter through the cover plate of TB1 to terminal 1.

NOTE

The multimeter should read zero voltage. If the multimeter does not read zero voltage, recheck the input ac power cord and disconnect it from the site power source.

5. Attach the stick-on labels to the lugged wires connected to the 5 V OUT and 5 V RTN terminals. Identify (on the labels) the terminating location of each wire.

6. Remove the lugged wires from the +5 V OUT and +5 V RTN terminals using either a 7/16-inch open-end or spin-tight wrench.

7. Remove each wire of TB1, labeling it with its previous terminal location as it is removed.

8. Remove each wire of TB2, labeling it with its previous location as it is removed.

9. Remove the nine backplate mounting screws at the rear of the power supply housing. Remove the plate.

10. Remove the three screws in front of the power supply housing (power terminating end).

11. Remove the power supply from its housing by pulling the power supply out from the rear of the housing.

12. Install the new power supply into the housing in the same orientation as the one that was removed.

CAUTION

Severe electrical damage will result to the system if remote sensing terminal jumpers are removed or left open with the power on.

13. Jumper the power supply logic drive module remote sense and return terminals on TB2 as illustrated in figure 6A-7.2.

14. Reconnect the new power supply in reverse order, starting with step 8 and ending with step 5 above. Do not perform step 4.

15. Turn the power on (procedure A3) and connect the negative lead of the multimeter, set to a range of displaying 10 V dc, to the +5 V RTN terminal. Connect

the positive lead of the multimeter to the +5 V OUT terminal. Check that the circuit breaker switch (CB1) on the power supply is in the on position. The meter should read no greater than +5.5 V dc. If the meter reads greater than +5.5 V dc, adjust the VOLT ADJ potentiometer on the power supply counterclockwise until a level of +5.5 V dc is attained.

16. Turn the power off (procedure A4) and connect the lugged wires (step 4) to the +5 V OUT and +5 V RTN terminals of the power supply. Ensure that the screws are tightened on the terminal.

17. Turn the power on (procedure A3) and again measure the voltage between the +5 V OUT and +5 V RET terminals. Adjust the VOLT ADJ potentiometer on the power supply until a level of 5 V dc ± 0.25 V dc is attained. If the power supply cannot be adjusted, it may be necessary to get technical assistance.

18. Check the power fail signal level. To do this, connect the negative probe of the multimeter to terminal TB2-4 and the positive probe to TB2-3. The meter should read a voltage greater than +2.5 V dc but less than +5.5 V dc. If the voltage is not correct, check that the interconnection of the wires between this power supply and the ±15/±12 V dc power supply agree with table 6A-1. If correct, then turn the power off (procedure A4) and remove the wires terminating at TB2-4 and TB2-3 of the +5 V dc power supply. Turn the power on (procedure A3) and again measure the voltage at these terminals as described above. If the voltage is correct, replace the ±15/±12 V dc power supply. If the voltage is not correct, replace the +5 V dc power supply.

19. Disconnect the multimeter leads, replace the cover, and replace the cabinet panels.

20. Continue the DDLT testing sequence.

A9 ±15 V/±12 V dc POWER SUPPLY CHECK

To check the ±15 V dc/±12 V dc power supply (see figure 6A-8). perform the following:

1. Remove the front panel from the processor cabinet. Unlatch and swing out the equipment mounting frame.

2. Remove the cabinet side panel(s) and check that the cabinet blowers are running by detecting air flow through the logic chassis. If they are not running, check the power connection to the site outlet.

3. Set a multimeter to a dc voltage range capable of clearly displaying 15 V dc.

4. Connect the multimeter leads to the TB2 terminals as described in table 6A-2. Adjust the potentiometer as indicated. If the voltage cannot be adjusted, power down the system, as described in procedure A4, and check the fuse (figure 6A-8). If the power supply cannot be adjusted, replace the ±15/±12 V dc power supply (procedure A10).

5. If the system has a dual processor, remove the rear cabinet panel and repeat the tests on the second power supply.

TABLE 6A-1. +5 V dc POWER SUPPLY AND ± 15/± 12 V dc POWER SUPPLY INTERCONNECTING WIRES

From	To
+5 V dc power supply	± 15/12 V dc power supply
TB1-1	TB1-1
TB1-2	TB1-2
TB1-3	TB1-3
TB2-3	TB3-1
TB2-4	TB3-2
TB2-5	TB3-3
TB2-6	TB3-4
+5 V dc power supply	+5 V dc power supply
TB2-11	TB2-12
TB2-13	TB2-14



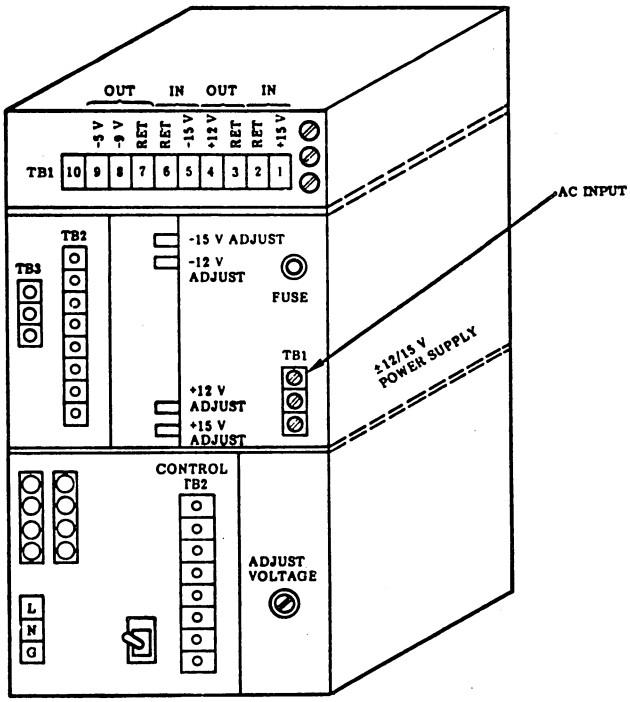

Figure 6A-8. 12 V dc Power Supply Test Points and Adjustments

6. Secure the equipment mounting frame and cabinet panels.

7. Resume the DDLT testing sequence.

A10 ±15 V/±12 V dc POWER SUPPLY REPLACEMENT

To replace the ±15 V dc/±12 V dc power supply (figure 6A-9), perform the following:

1. Turn the power off (procedure A4), and disconnect the power cord from the primary source.

2. Remove the front and right side panels for access to processor 1. Unlatch and swing down the equipment mounting frame.

3. Remove the rear and left side panels for access to processor 2.

4. Set a multimeter to a range capable of displaying 120 V ac. Connect the negative lead of the multimeter through the cover plate of TB1 to terminal 3 on the ±15/±12 V dc power supply (figure 6A-9).

   Connect the positive lead of the nultimeter through the cover plate of TB1 to terminal 1.

   NOTE

   The multimeter should read zero voltage. If the multimeter does not read zero voltage, recheck the input ac power cord, disconnect it from the site power outlet, and repeat step 4.

5. Attach the stick-on labels to the lugged wires connected to the terminals of TB2 and TB3.

6. Remove each wire from TB2 and identify on its label its previous terminal location on TB2. Remove each wire of TB3 and identify on its label its previous terminal location.

7. Remove the nine backplate mounting screws at the rear of the power supply housing and remove the plate.

8. Remove the three screws in front of the power supply housing.

9. Remove the power supply from its housing by pulling it out from the rear of the housing.

10. Install the new power supply into the housing in the same orientation as the one that was removed.

11. Connect the new power supply in reverse order starting with step 9 and ending with step 6 above. Do not reconnect the TB2 wires (step 6).

12. Turn the power on (procedure A3). Connect the negative and positive leads of a multimeter; set it to a range capable of displaying 15 V dc to the terminal locations described in table 6A-3.

TABLE 6A-2. TEST VOLTAGE READINGS

Negative Lead	Positive Load	Reading Should Be No Greater Than	If Reading is Greater, Adjust Potentiometer Counterclockwise to
TB2-8	TB2-7	15 V dc ± 0.7 V dc	+15 V dc
TB2-6	TB2-5	12 V dc ± 0.6 V dc	+12 V dc
TB2-3	TB2-4	12 V dc ± 0.6 V dc	-12 V dc
TB2-1	TB2-2	15 V dc ± 0.7 V dc	-15 V dc

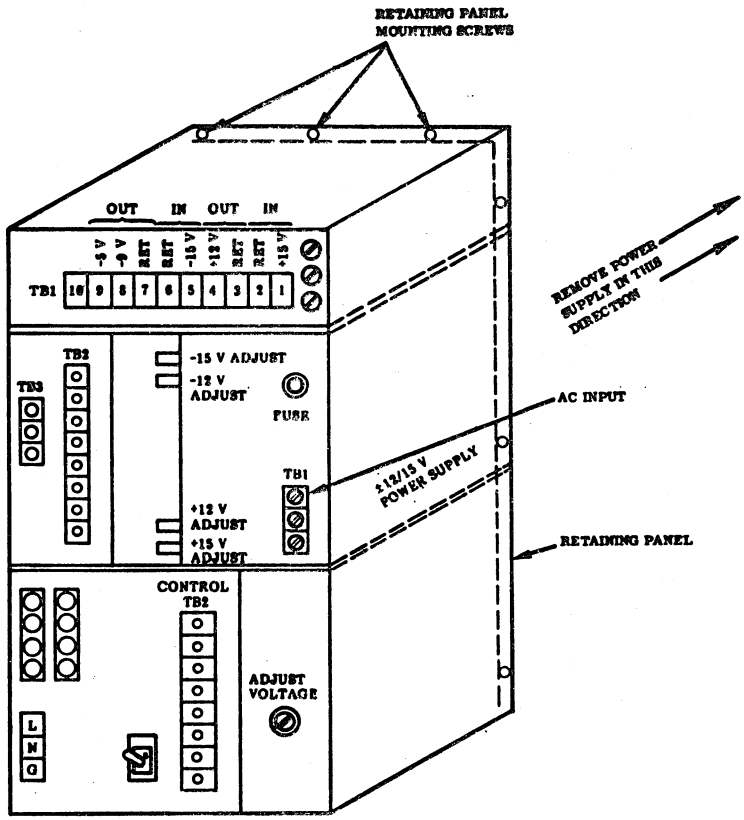

Figure 6A-9. ±15/±12 V dc Power Supply and Housing

13. Turn off the power and connect the lugged wires (step 6) to terminal block TB2

14. Turn the power on and again measure the voltage at terminal block TB2 (table 6A-4). If the voltage cannot be adjusted, it may be necessary to get technical assistance.

15. Check the power fail signal level. To do this, set the multimeter to a range capable of displaying 5 V dc Connect the negative probe of the meter ot TB3-2 and the positive probe to TB3-1. The meter should read a voltage greater than +2.5 V dc but less than +5.5 V dc. If the voltage is not correct, perform step 17 of procedure A8.

16. Disconnect the multimeter leads, and replace the cabinet panels.

17. Continue the DDLT testing sequence.

TABLE 6A-3. TEST VOLTAGE READINGS (NOT LOADED)

Negative Lead	Positive Lead	Reading Should Be No Greater Than	If Reading Is Greater, Adjust Potentiometer Counterclockwise to
TB2-8	TB2-7	16.5 V dc	+15 V dc
TB2-6	TB2-5	13.2 V dc	+12 V dc
TB2-3	TB2-4	13.2 V dc	-12 V dc
TB2-1	TB2-2	16.5 V dc	-15 V dc

TABLE 6A-4. TEST VOLTAGE READINGS (LOADED)

Negative Lead	Positive Lead	Reading Should Be No Greater Than	If Reading Is Not Correct, Adjust Potentiometer Counterclockwise to
TB2-8	TB2-7	15 V dc ± 0.7 V dc	+15 V dc
TB2-6	TB2-5	12 V dc ± 0.6 V dc	+12 V dc
TB2-3	TB2-4	12 V dc ± 0.6 V dc	-12 V dc
TB2-1	TB2-2	15 V dc ± 0.7 V dc	-15 V dc

A11 -9 V dc POWER SUPPLY CHECK

To check the 9 V dc power supply (figure 6A-10), perform the following:

1. Remove the cabinet panel. Unlatch and swing down the equipment mounting frame.
2. Remove the cabinet side panel(s) and check that the power supply blowers are running by detecting air flow through the logic chassis. If the blowers are not running, check the power connection to the site outlet.
3. Set a multimeter to a dc voltage range capable of displaying 9 V dc
4. Connect the meter leads to -9 V dc test points TB1-7 (positive) and TB1-8 (negative). Adjust the potentiometer for -9 V dc ±0.5 V dc.
5. If the power supply cannot be adjusted, turn the power off (procedure A4) and replace the power supply (procedure A12).
6. If the system has a dual processor, remove the rear cabinet panel and repeat the tests on the second power supply.
7. Secure the equipment mounting frame and cabinet panels.
8. Resume the DDLT testing sequence

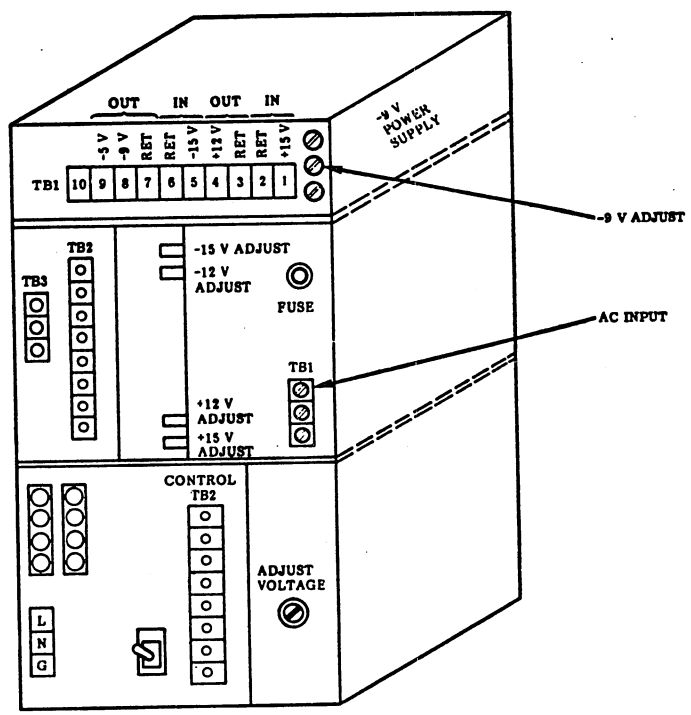

Figure 6A-10. -9 V dc Power Supply Test Points

A12 -9 V dc POWER SUPPLY REPLACEMENT

To replace the -9 V dc power supply (figure 6A-11), perform the following:

1. Turn the power off and disconnect the power cord from the primary source.
2. Remove the front and right side panels for processor 1. Unlatch and swing down the equipment mounting frame.
3. Remove the rear and left side panels for processor 2.
4. Set a multimeter to a range capable of displaying 120 V ac. Connect the negative lead of the meter to TB1-3 and the positive lead to TB1-1 on the +5 V dc power supply (figure 6A-11).

NOTE

The multimeter should read zero. If the meter reading is not zero volts, recheck and disconnect the input ac power from the site source.

5. Attach the stick-on labels to the lugged wires connected to the terminals of TB1 of the -9 V dc power supply.
6. Identify each wire (with the labels) as to its location on the terminal block (figure 6A-11)
7. Remove the identified wires from TB1 of the -9 V dc power supply
8. Remove the nine mounting screws holding the retaining panel at the rear of the power supply housing (figure 6A-11).
9. Remove the two screws at the left front of the power supply housing.
10. Remove the power supply by pulling it out fron the rear of the housing.
11. Install the new power supply into the housing in the same orientation as the one that was removed.
12. Reconnect the wires identified in step 6 as input wires (TB1-1, TB1-2, TB1-5, and TB1-6) to the new power supply.

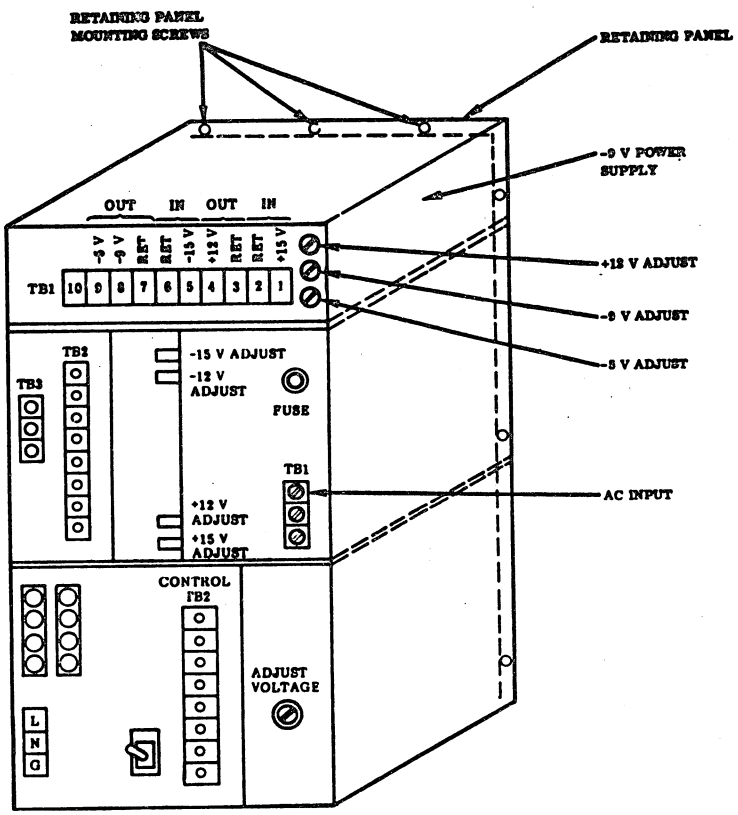

Figure 6A-11. -9 V dc Power Supply

13. With the multimeter set to read 15 V dc, turn the processor power on (procedure A3) and make the voltage tests listed in table 6A-5. (If +15 V dc or -15 V dc cannot be adjusted, perform procedures A7 and A9.)

14. Reconnect the remaining output wires to TB1-3, TB1-4, TB1-7, TB1-8, and TB1-9.

15. Make the voltage tests and readjustments as in step 13

16. Disconnect the meter leads, and replace and secure the cabinet panels.

17. Continue the DDLT testing sequence.

A13 POWER DISTRIBUTION BOX COMPONENTS CHECK

Checking components of the power distribution box requires the use of a vom and the following procedure (figure 6A-12):

1. If the system has a single processor, remove the front panel from the processor cabinet. Release the latches and swing down the equipment mounting frame

2. If the system has a dual processor, remove the rear panel from the cabinet.

3. Take out the six mounting screws, and remove the cover from the power distribution box.

4. With the vom set to read 300 V ac, check the input voltage on terminals 1 and 2 of TB01. The voltage should be 120 V ac ±10%

5. With the vom set to read 300 V ac, check the voltage on the output terminals of the line filter. The voltage should indicate approximately 0.8% less than step 4 when fully loaded.

6. With ac power off, measure the voltage across T1 and T2 of the triac. If the meter reads 120 V ac, the triac and surge current limiter printed circuit board are all right. If the meter reads 0 V, the triac is shorted and must be replaced (procedure A18). If the meter reads 70 V ac to 100 V ac, the surge current limiter printed circuit board is bad and must be replaced (procedure A15).

   With ac power on, measure the voltage across T1 and T2 of the triac. If the meter reads 120 V ac, the triac is open and must be replaced (procedure A18). If the meter reads 0 V ac, the triac and printed circuit are all right. If the meter reads 70 V through 100 V ac, the printed circuit board is bad and must be replaced (procedure A15).

7. Remove the meter leads and replace the cover on the power distribution box.

8. Close the equipment mounting frame, and reinstall the front panel on the cabinet.

9. Continue with the DDLT testing sequence.

A14 AC LINE FILTER REPLACEMENT

To replace an ac line filter (figure 6A-13), perform the following:

1. Turn off the power (procedure A4), and disconnect the power cord from the primary source.

2. Remove the front panel from the processor cabinet for a single-processor system. Then release the latches and swing down the equipment mounting frame

3. Remove the rear panel from the cabinet for a dual-processor system.

TABLE 6A-5. -9 V dc POWER SUPPLY VOLTAGE ADJUSTMENT

Negative Lead	Positive Lead	Reading Should Be	Adjust Potentiometer
TB1-2	TB1-1	+15 V dc	+15 V adjust on ±15 V dc/±12 V dc power supply
TB1-6	TB1-5	-15 V dc	-15 V adjust on +15 V dc/+12 V dc power supply
TB1-3	TB1-4	+12 V dc	+12 V adjust on 9 V dc power supply
TB1-7	TB1-8	-9 V dc	-9 V adjust on 9 V dc power supply
TB1-7	TB1-9	-5 V dc	-5 V adjust on 9 V dc power supply

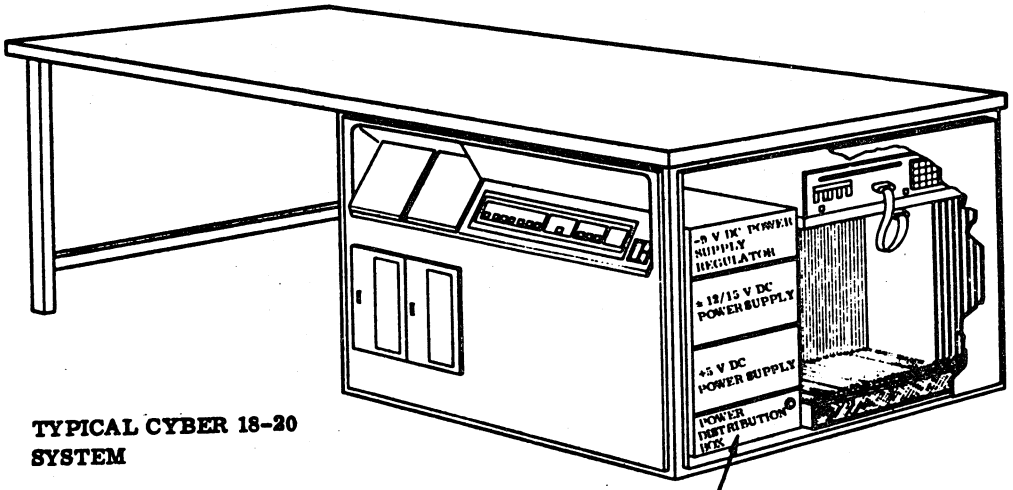

TYPICAL CYBER 18-20 SYSTEM

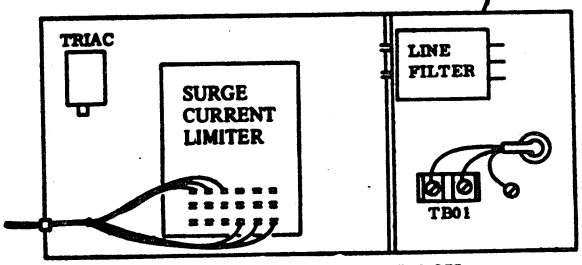

POWER DISTRIBUTION BOX

NOTE: IN A DUAL-CPU TIMESHARE SYSTEM, THE POWER DISTRIBUTION BOX IS LOCATED ON THE OPPOSITE CORNER OF THE CABINET.

Figure 6A-12. Power Distribution Box Assembly

4. Remove the six screws and take off the cover from the power distribution box.
5. Refer to figure 6A-13 and locate the line filter.
6. Identify and remove the wires from the line filter.
7. Take out the four mounting screws and remove the line filter from the power distribution box.
8. Install the new line filter with the same orientation as before. Replace the mounting screws and wires.
9. Reinstall the power distribution box cover and replace the cabinet panels.
10. Reconnect the power cord to the primary power source, and continue the DDLT testing sequence.

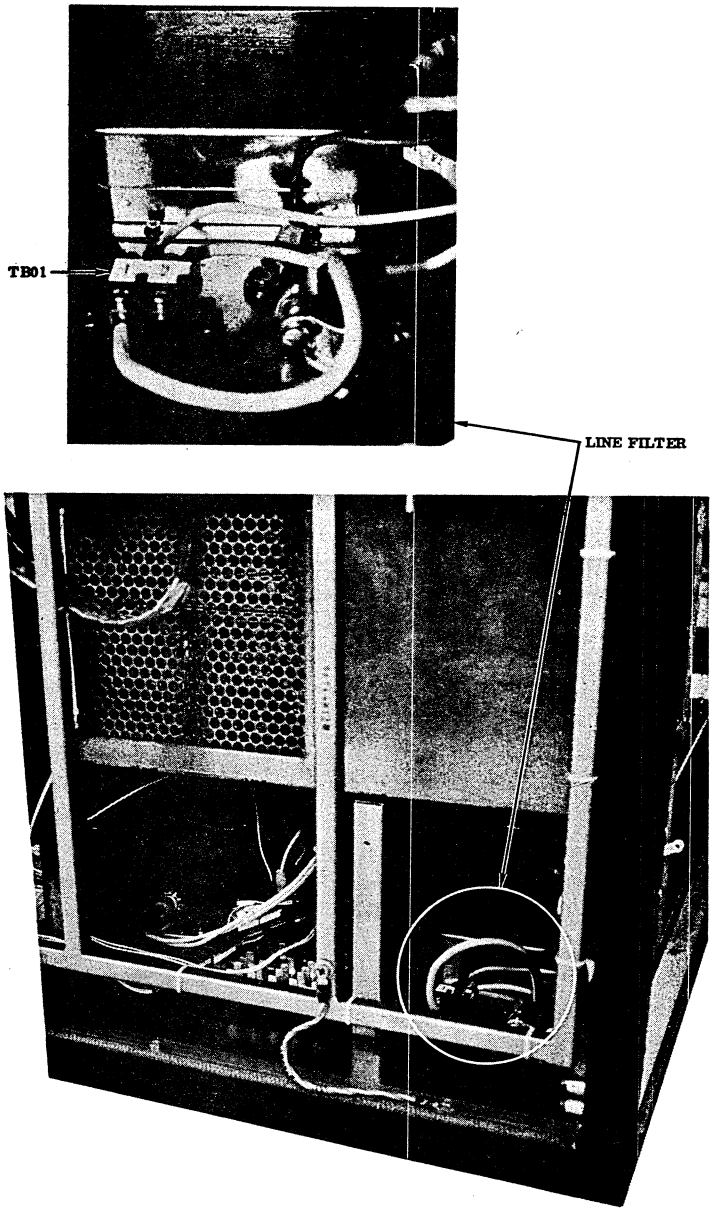

Figure 6A-13. AC Line Filters

A15 SURGE CURRENT LIMITER BOARD REPLACEMENT

To replace the surge current limiter board (figure 6A-14), proceed as follows:

1. Turn off the power (procedure A4) and disconnect the power cord from the primary source.
2. Remove the front panel from the cabinet for a single-processor system. Release the latches and swing down the equipment mounting frame.
3. Remove the rear left panel from the cabinet for a dual-processor system.
4. Refer to figure 6A-14 and locate the printed circuit board.
5. Identify and remove the wires from the printed circuit board.
6. Release the four mounitng screws and remove the printed circuit board (5YFT) and the standoffs.
7. Install the new printed circuit board on the standoffs with the same orientation as before, and replace the four mounting screws.
8. Reconnect the wires to the printed circuit board as they were marked, and replace the power distribution box cover.
9. Replace and secure the cabinet panels.
10. Reconnect the power cord to the primary power source and continue with the DDLT testing sequence.

A16 POWER DISTRIBUTION BOX CIRCUIT BREAKER CHECK/REPLACEMENT

To check and/or replace the circuit breaker in the power distribution box, proceed as follows:

1. Turn off all power to the processor (procedure A4) and disconnect the power cord from the primary source.
2. Refer to figure 6A 15 and locate the circuit breaker.
3. Remove the front and right side panels from the cabinet for a single-processor system. Then release the latches and swing down the equipment mounting frame.
4. Remove the rear and left side panels from cabinet for a dual-processor system.
5. Identify and remove the wires from the circuit breaker.
6. With an ohmmeter, check for continuity across the circuit breaker terminals. If no continuity is present, press the circuit breaker reset button and check again. If there is still no continuity, replace the switch.
7. Remove the circuit breaker by releasing the two mounting screws on the outside of the power distribution box and pulling the circuit breaker out through the inside of the power distribution box
8. Install the new circuit breaker with the same orientation as before. Replace the mounting screws. Reconnect the wires removed in step 5.
9. Reinstall the power distribution box cover and replace the cabinet panels.
10. Reconnect the power cord to the primary source and continue the DDLT testing sequence.

A17 POWER DISTRIBUTION BOX RESISTOR ASSEMBLY REPLACEMENT

To repalce the power distribution box resistor assembly (figure 6A-16), perform the following.

1. Turn off the power (procedure A4) and disconnect the power cord from the primary power source.
2. Remove the front panel from the processor cabinet if the system has a single processor. Release the latches and swing down the equipment mounting frame.
3. If the system has a dual processor, remove the rear panel from the cabinet.
4. Refer to figure 6A-16 and locate the resistor assembly.
5. Open the power distribution box cover by removing the six mounting screws.
6. Identify and remove the two wires from the surge current limiter board.
7. Remove the two resistor mounting screws.
8. Install the new resistor assembly, maintaining the same orientation.
9. Reconnect the wires removed in step 6.
10. Replace the power distribution box cover, and cabinet panels.
11. Reconnect site power to the system.
12. Continue the DDLT testing sequence.

A18 TRIAC POWER SWITCH REPLACEMENT

To replace the triac power switch (figure 6A-17), proceed as follows:

1. Turn off the power (procedure A4), and disconnect the power cord from the primary source.
2. If the system has a single processor, remove the front panel from the processor cabinet. Release the latches and swing down the equipment mounting frame.

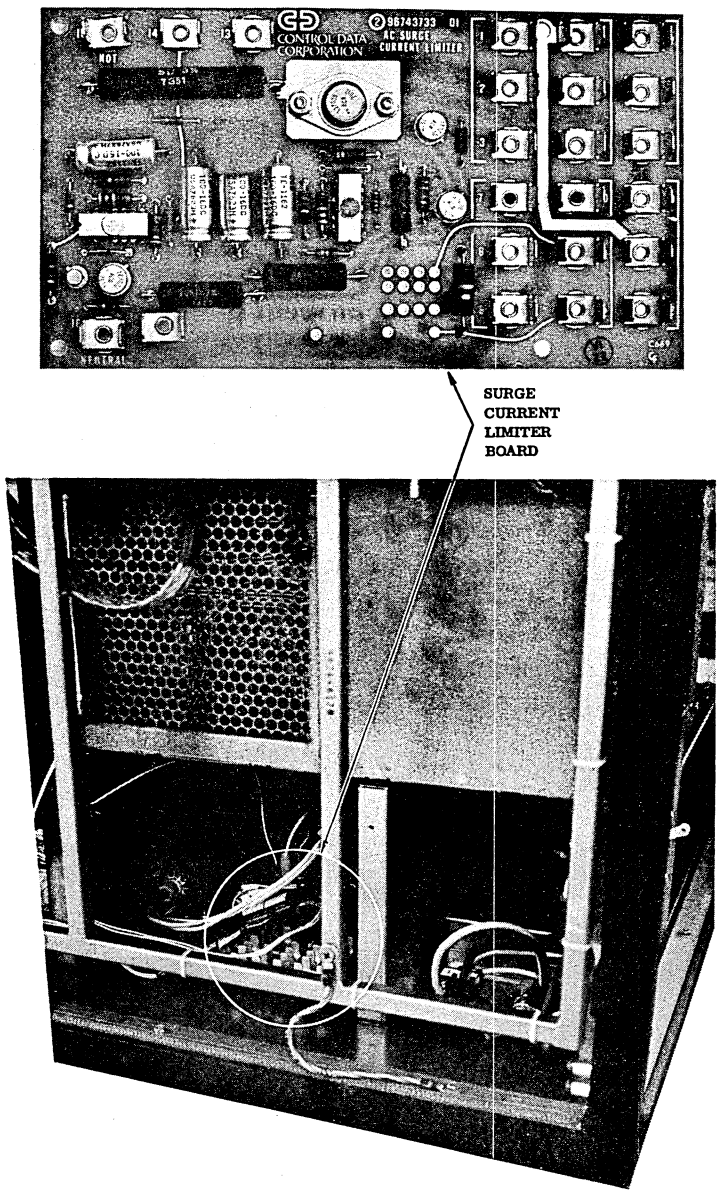

Figure 6A-14. Surge Current Limiter Board

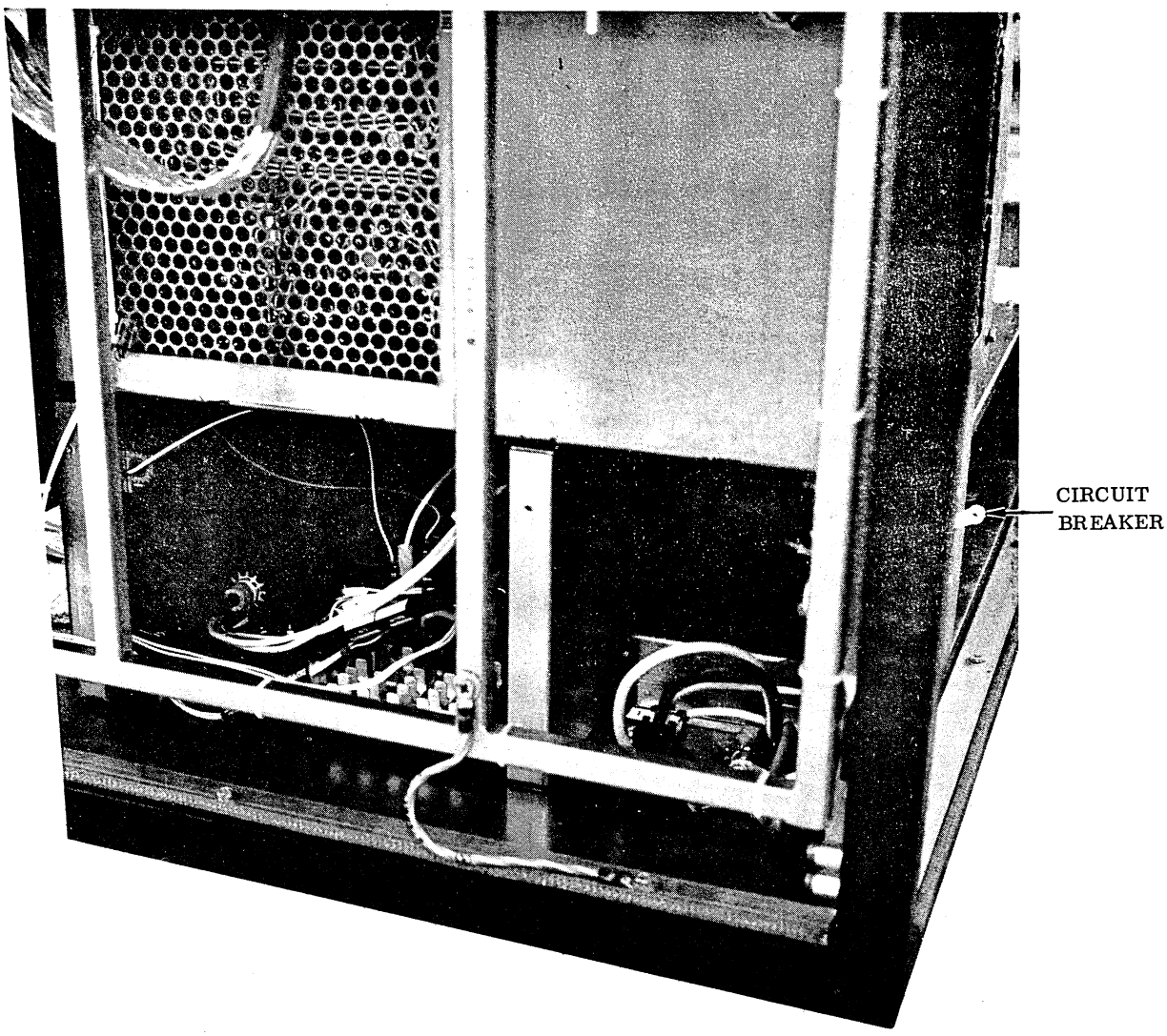

Figure 6A-15. Power Distribution Box Circuit Breaker

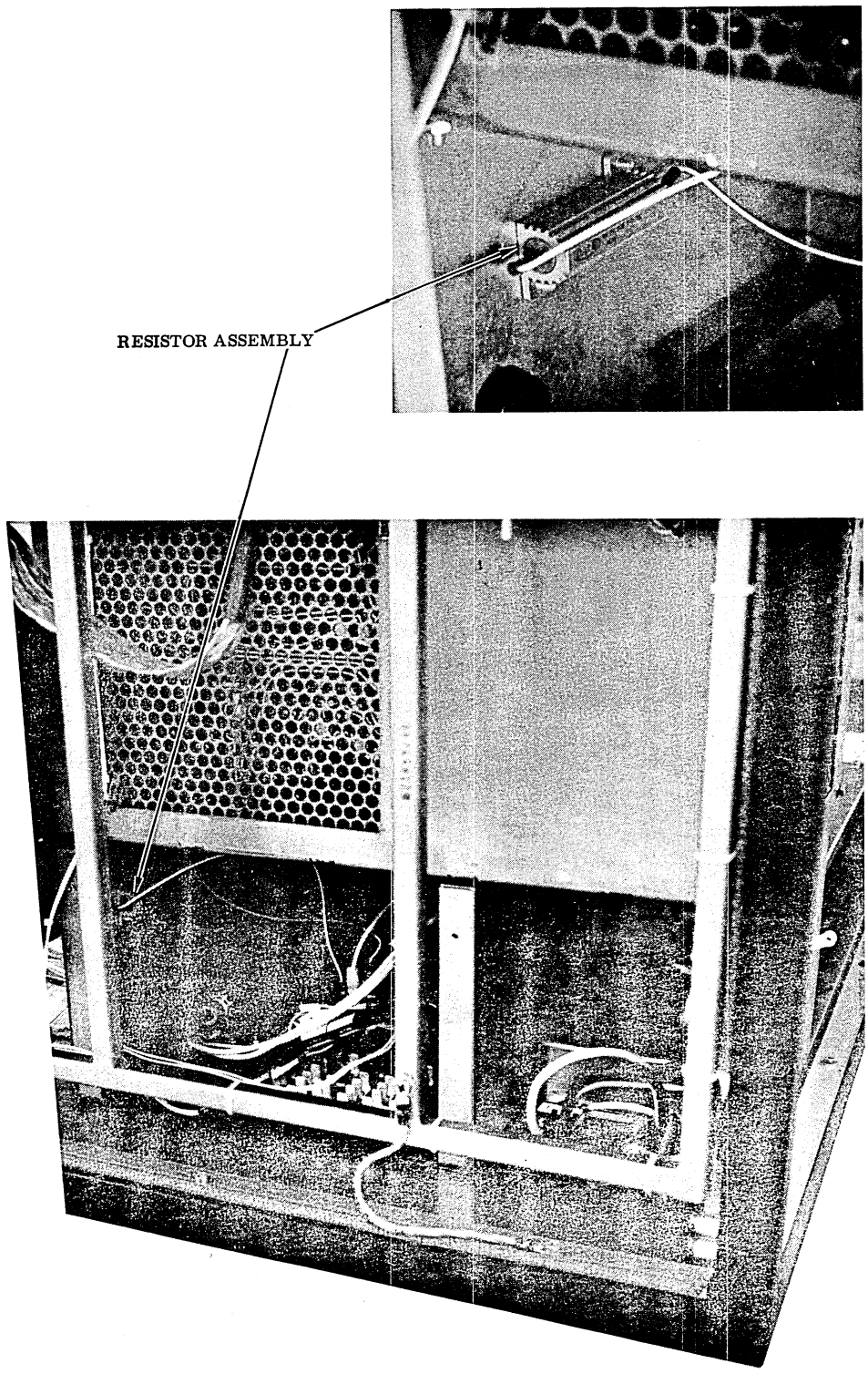

Figure 6A-16. Power Distribution Box Resistor Asembly

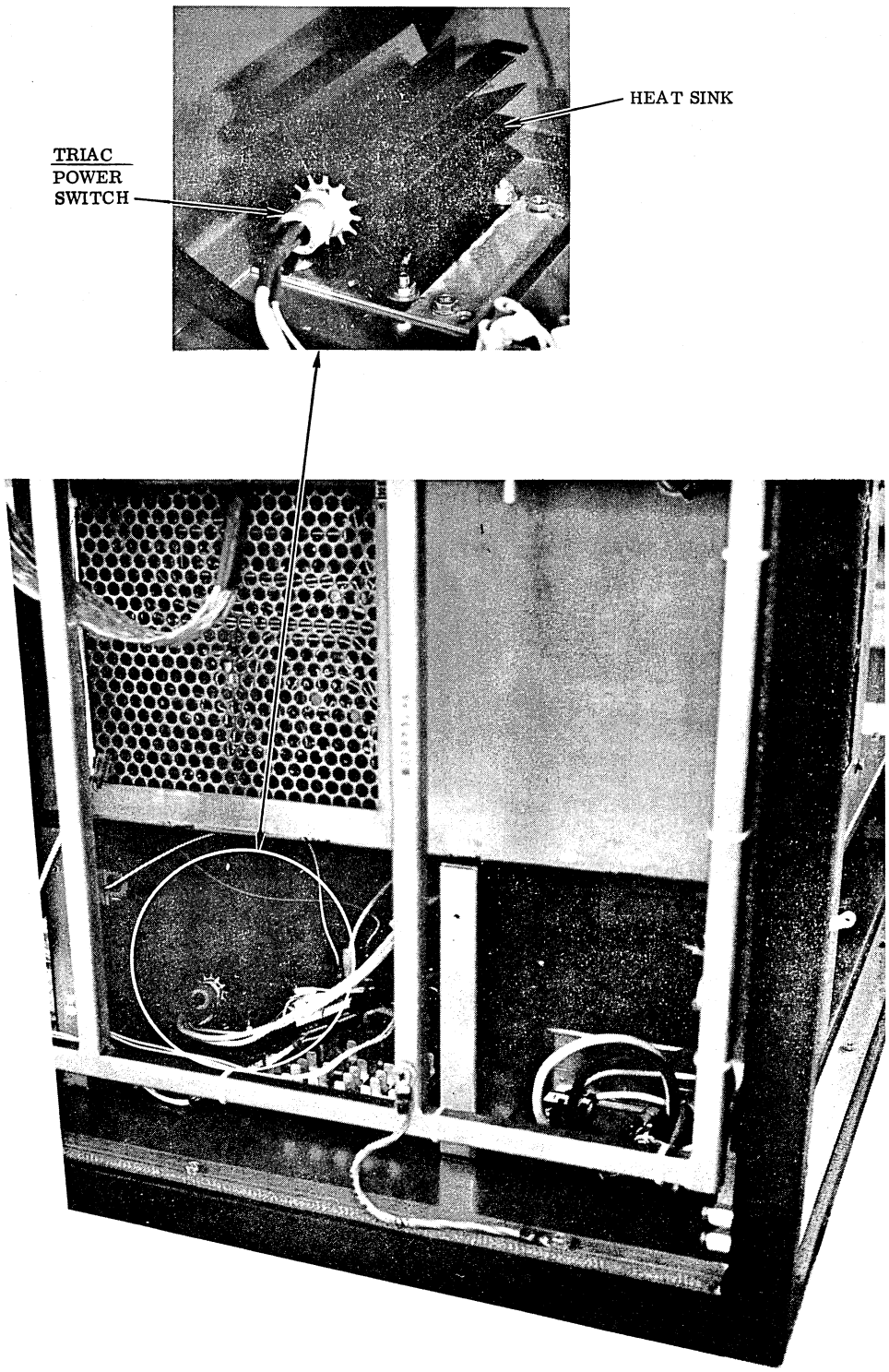

Figure 6A-17. Triac Power Switch

3. If the system has a dual processor, remove the rear panel from the cabinet.

4. Refer to figure 6A-17 and locate the triac.

5. Identify and remove the three triac wires from the surge current limiter printed circuit board.

6. Using a 5/8-inch open end wrench, carefully turn the triac counterclockwise to remove it from the heat sink.

7 Install the new triac in the heat sink and snug it down lightly with the wrench.

8. Reconnect the triac wires to the surge current limiter printed circuit board, and reinstall the power distribution box cover.

9. Replace the cabinet panels and connect the power cord to the primary power source.

10. Continue the DDLT testing sequence.

A19 POWER ON/OFF SWITCH CHECK/REPLACEMENT

To check or replace the processor POWER ON/OFF switch, proceed as follows:

1. Turn off power (procedure A4) and disconnect the power cord from the primary source

2. Remove the front panel from the processor cabinet

3. Release the latches and pull the equipment mounting frame forward.

4. Refer to figure 6A-18 and locate the switch.

5. Identify and remove wires from the switch. With an ohmmeter check for continuity across the switch terminals with the switch on. then off. If no change is noted on the ohmmeter, replace the switch.

6. Remove the switch by releasing the two spring locks at the top and botton of the switch. Pull the switch straight out.

7. Install the new switch so that it is off when the switch is in the down position.

8. Reconnect the wires, close the equipment mounting frame, reinstall the cabinet panel, and connect the power cord to the primary power source

9. Continue testing from the point of entry to this procedure.

A20 OPERATORS PANEL PRINTED CIRCUIT BOARD REPLACEMENT

To replace the operators panel printed circuit board (figure 6A-19), perform the following with the processor power off (procedure A4).

1. Pull out at the bottom of the right front panel and remove the panel from the cabinet.

2. Unlatch and swing down the equipment mounting frame

3. Identify the cables and disconnect them from the printed circuit board assembly.

4. Remove the eight mounting screws and remove the printed circuit board (figure 6A-19).

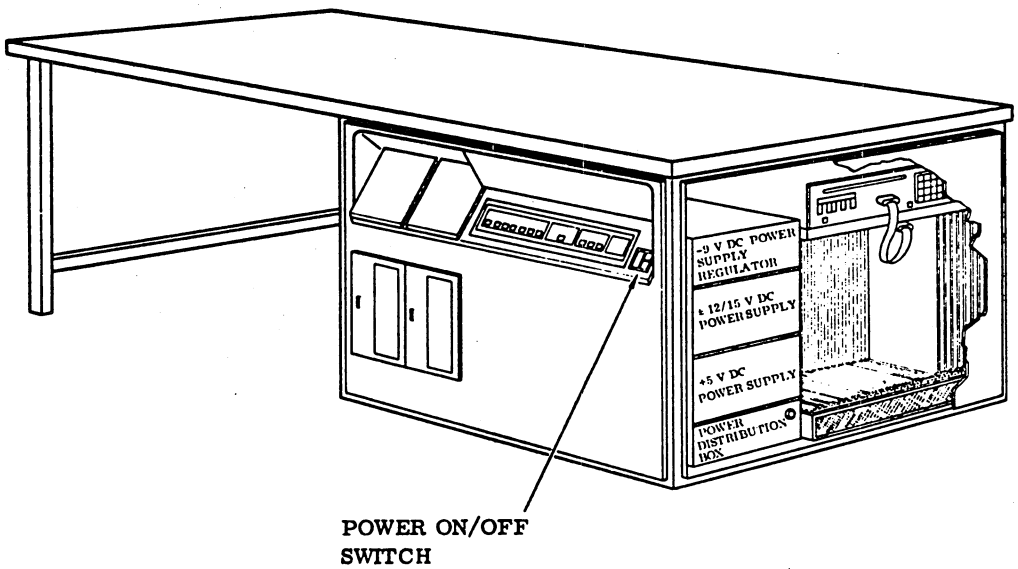

Figure 6A-18. Processor POWER ON/OFF Switch

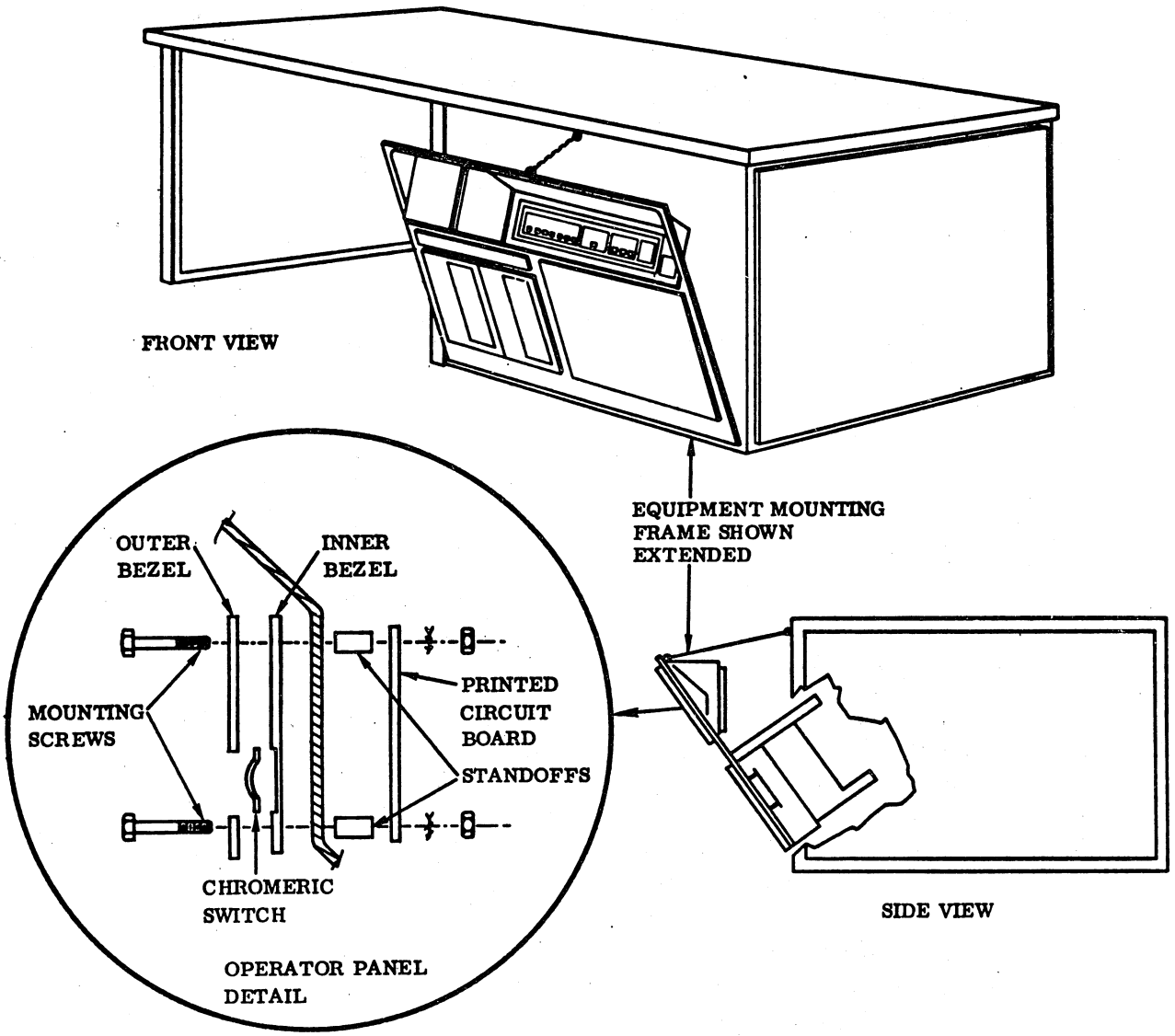

Figure 6A-19. Operators Panel Assembly

5. Position the new printed circuit board in the location vacated by the old board and install the mounting screws.

6. Reconnect the cables to the printed circuit board.

7. Secure the equipment mounting frame and the front panels in their proper positions.

8. Restore power to the processor (procedure A3).

A21 OPERATORS PANEL SWITCH AND BEZEL REPLACEMENT

To replace a switch or bezel in the operators panel (figure 6A-19) proceed as follows:

1. Turn the power off (procedure A4).

2. Remove the front panel from the cabinet.

3. Remove the cable from the back of the switch assembly.

4. Reach your fingers through the mounting frame under the operators panel and while holding the printed circuit board on the inside with the fingers and the bezel with your thumb on the outside, remove the eight mounting screws that hold the bezel plate to the operators panel (figure 6A-19).

5. Continue to hold the printed circuit board in place and remove the bezel and switch assembly.

6. Temporarily reinstall two mounting screws to retain the printed circuit board in place while working on the switch and bezel assembly.

7. Separate the two sections of the bezel to expose the chromeric switch assembly (figure 6A-19).

8. Remove and replace the switch assembly with a new one.

9. Reassemble the switch and two sections of the bezel. Replace the bezel plates if broken or damaged.

10. Reinstall the switch and bezel assembly by reversing steps 1 through 6.

A22 DUAL-PROCESSOR MULTIPLEXER PRINTED WIRING ASSEMBLY REPLACEMENT

To replace the dual-processor multiplexer printed wiring assembly (figure 6A-20), proceed as follows:

1. Turn off the POWER ON/OFF switch on the processor operator panel

2. Pull out at the bottom of the front panel and remove the panel from the cabinet.

3. Unlatch and swing down the equipment mounting frame.

4. Identify the cables and disconnect them from the printed circuit board.

5. Remove the four mounting screws and lift out the printed circuit board (figure 6A-20).

6. Position the new printed circuit board in the location vacated by the old board and install the mounting screws.

7. Reconnect the cables to the printed circuit board.

8. Secure the equipment mounting frame

9. Restore power to the processor.

A23 LOGIC BOARD REPLACEMENT

To replace the logic boards, perform the following.

1. Turn the power off (procedure A4).

2. Remove the right side panel from the cabinet for access to processor 1 or left side panel for access to processor 2.

3. Remove the processor cover plate by rotating the two captive fasteners one quarter turn counterclockwise.

4. Locate the logic board for removal (figure 6A-21).

5. Using the card extractor tool (part number 88911900) attached to the processor cover plate, slide the logic board out of the chassis, and place it on a flat surface.

6. Before installing the new logic board, verify that all jumpers and switches correspond to the normal operating positions as defined in section 4, volume 1.

7. Position the board in the front of the logic chassis with the component side facing left.

8. Slide the board carefully into the chassis. Seat the board into the connector by applying firm thumb pressure at the upper and lower corners of the board.

9. Turn the power on (procedure A3), and execute the DDLTs starting with table 6-3 to verify proper operation

10. Replace the processor cover and secure the side panel on the cabinet.

A24 MOS MEMORY BOARD REPLACEMENT

1. Turn the power off (procedure A4).

2. Remove the right side panel from the cabinet for access to processor 1 and the left side panel for access to processor 2.

3. Remove the processor cover plate by rotating the two captive fasteners counterclockwise.

4. Refer to figure 6A-22 and locate the memory board to be removed

5. Using the extractor tool attached to the inside of the processor cover plate, slide the memory board out.

6. Position the new board in the vacated position with the component side of the board facing left

7. Apply firm pressure at the upper and lower corners of the board and seat the board into the backplane connector.

8. Refer to procedure 25, items 5 through 7, and verify the DMA priority switches on the memory interface board.

9. Replace the cover plate and the side panel, and turn on the processor power (procedure A3).

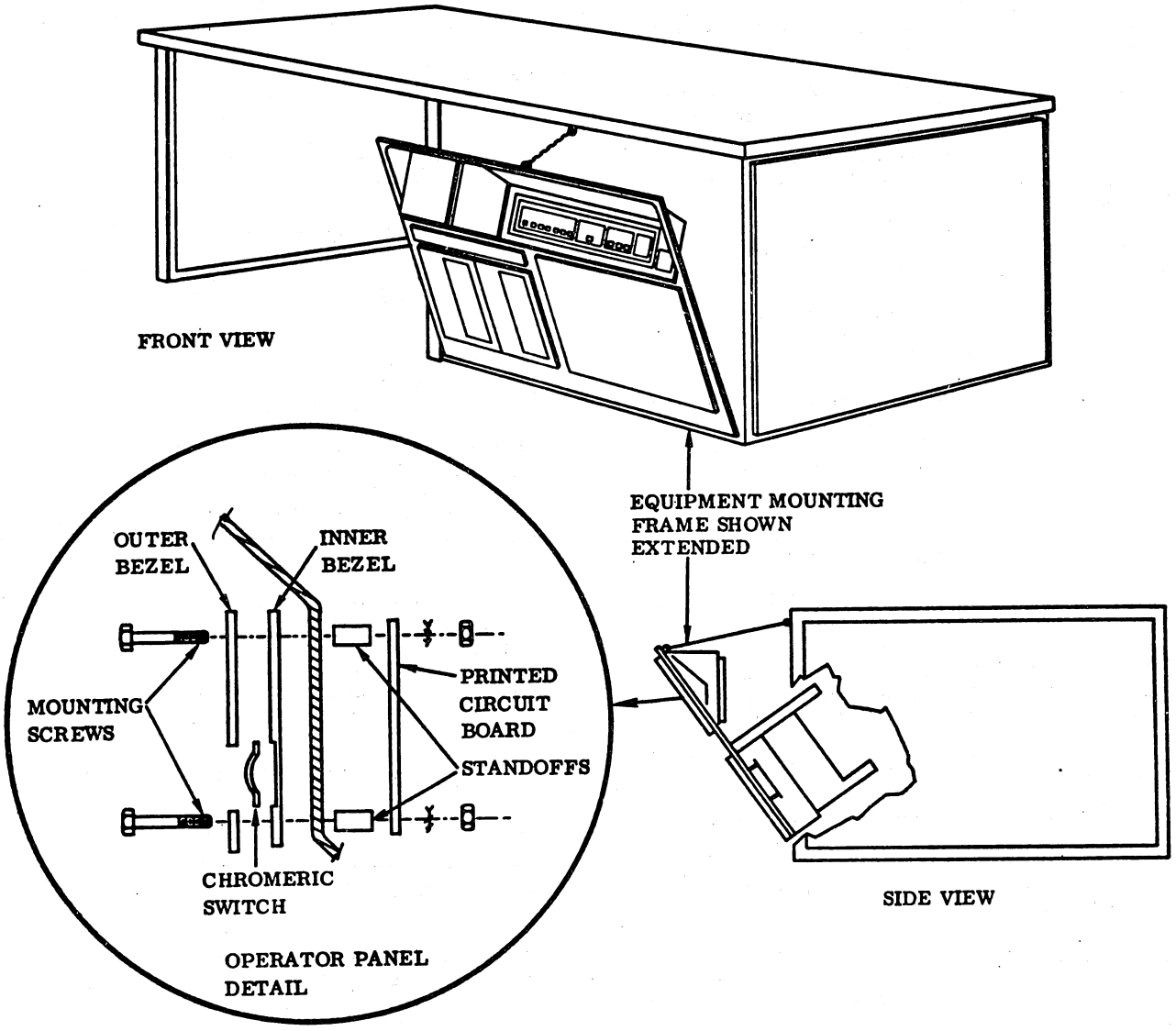

Figure 6A-20. Dual Processor Multiplexer Assembly

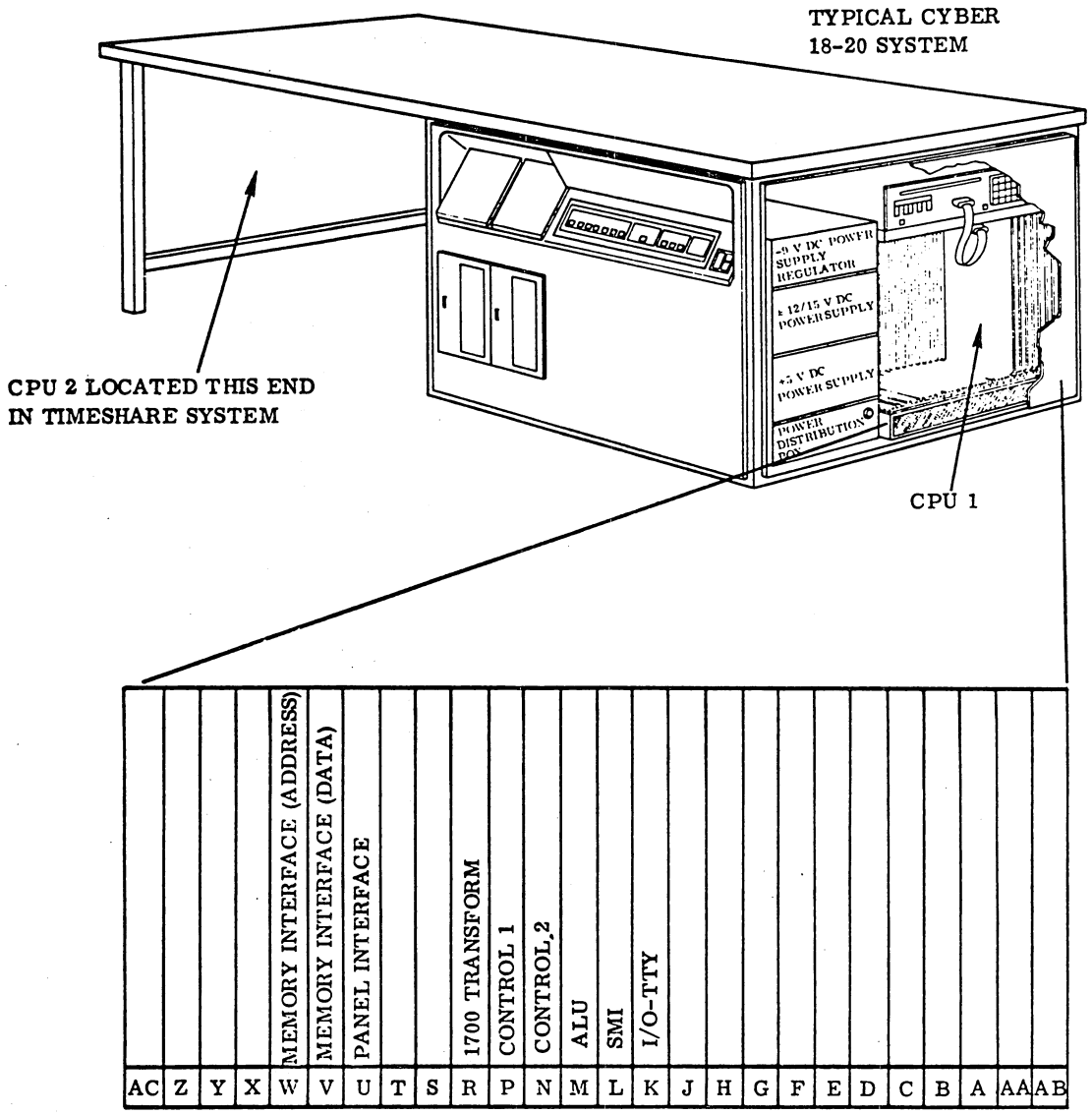

Figure 6A-21. Logic Board Location

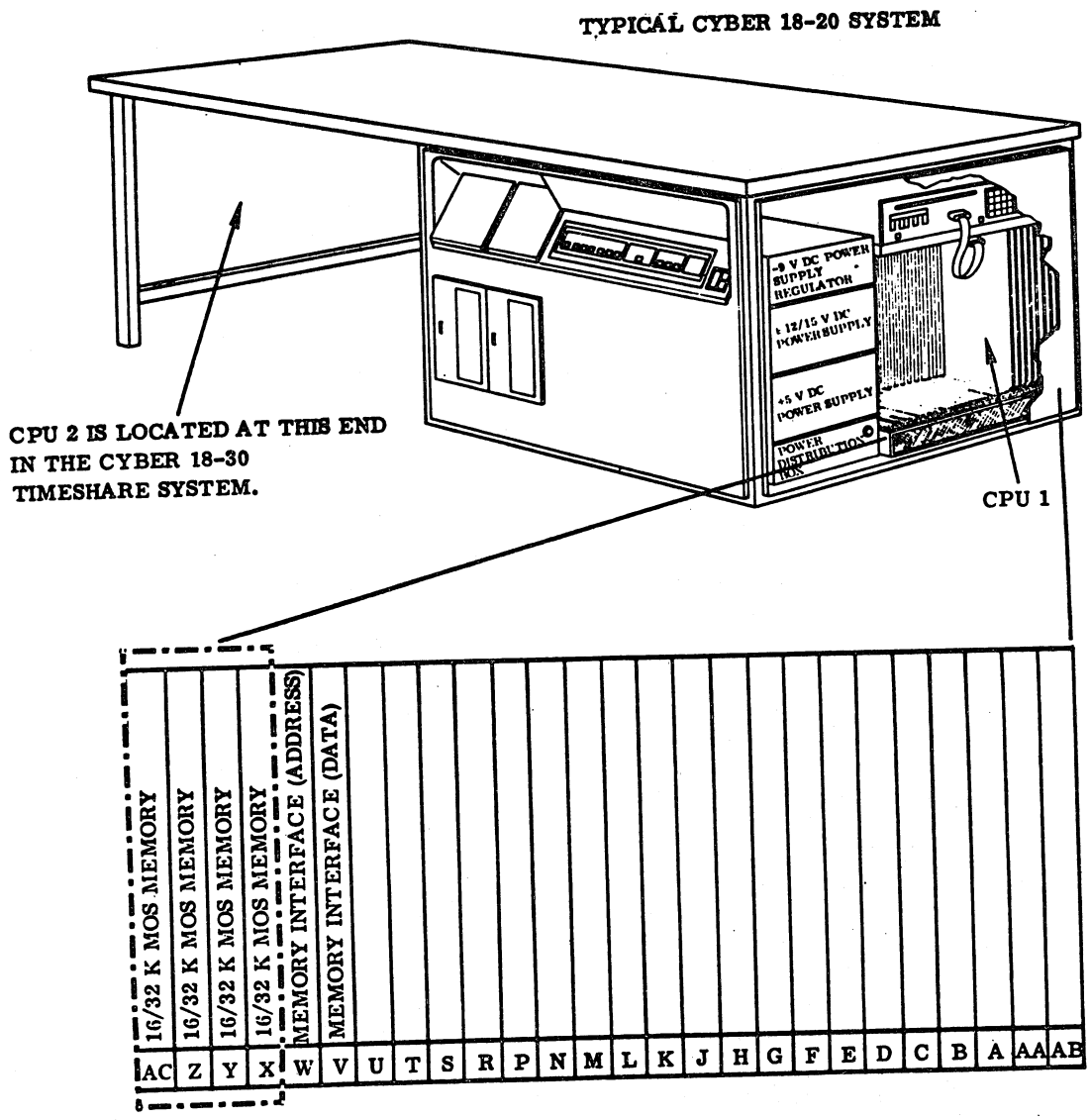

Figure 6A-22. Memory Board Location

A25 MEMORY INTERFACE BOARD REPLACEMENT

1. With the power off, remove the right side panel from the processor cabinet for access to processor 1 or remove the left side panel for access to processor 2.
2. Remove the cover plate from the processor by rotating the two captive fasteners counterclockwise.
3. Refer to figure 6A-23 and locate the memory interface boards (data and address).
4. Using the extractor tool attached to the front panel, slide the desired board(s) out.
5. Before installing new boards, DMA priority switches must be set. (Refer to figure 4A-4, volume 1, for normal settings.)
6. Position the new board or boards with new switch settings in the designated positions iwth the component side facing left.

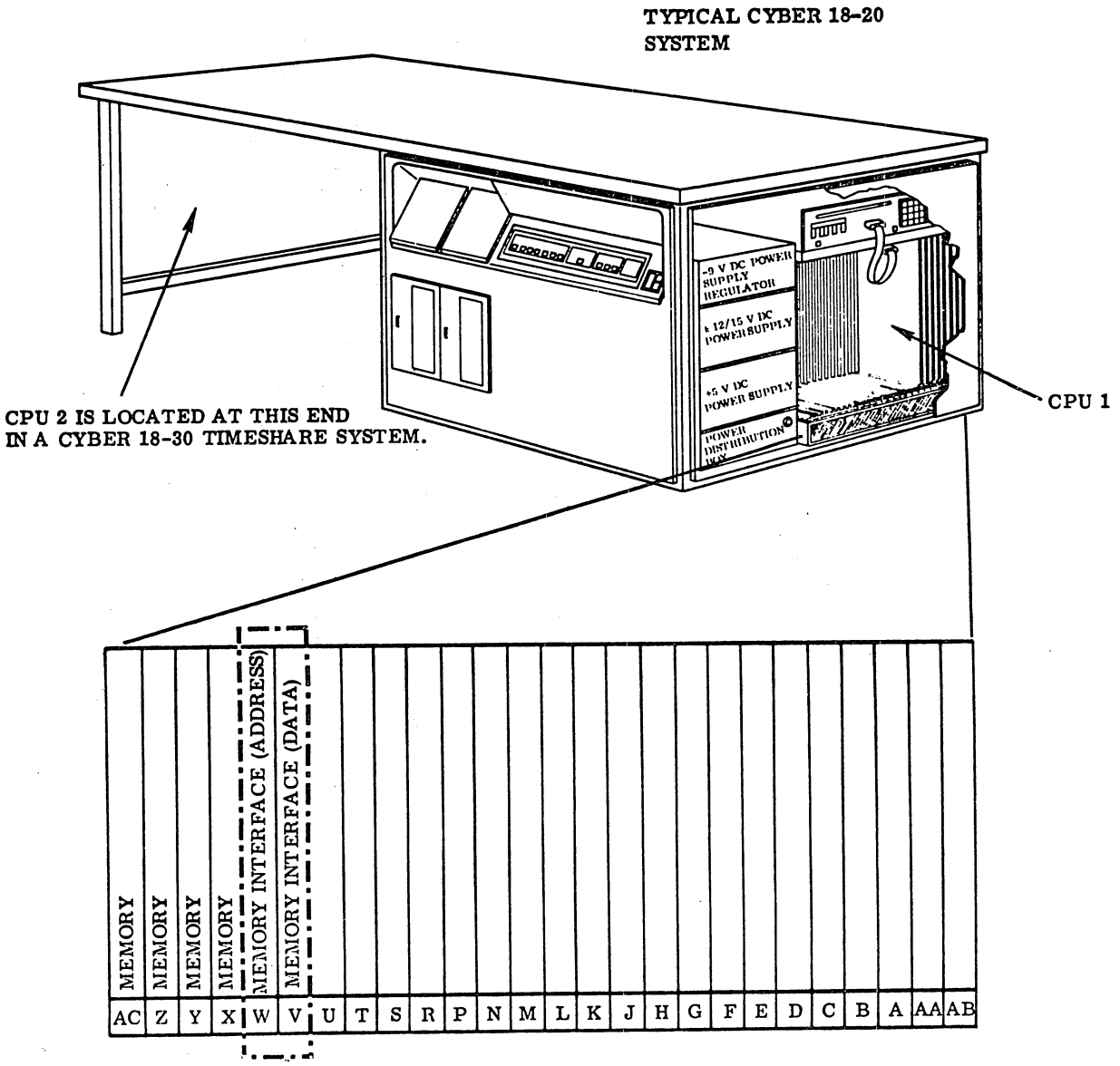

Figure 6A-23. Memory Interface Location

7. Apply firm pressure at the upper and lower corners of the boards and seat them into their respective backplane connectors.

8. Replace the processor cover plate and side panels. Restore power to the processor.

A26 MOS MAIN MEMORY RUN PARAMETERS

NOTES

1. Read the entire procedure before entering parameters in tables 6-6 and 6-9.

2. In a dual-processor system, processor 1 is the AB113 and processor 2 is the AA109. The local processor is the one in which the diagnostic resides and can be either processor 1 or processor 2.

1. Examine the FCO tags on both sides of the front covers of processor 1 and processor 2 to determine the MOS memory configuration (slots X through AC). Fill in the equipment number columns of table 6A-6.

2. Fill in the 16K blocks per board column of table 6A-6 using the following information:

Equipment Number	Board Type	16K Blocks per Board
AT241	32K array	2
AT275	16K array	1
DT223	Error correction code array	0

Calculate the total number of 16K blocks per processor for each processor by adding up the 16K blocks per board in each processor.

3. Use the total number of 16K blocks for each processor (derived from table 6A-6) and select the correct V, W, X, Y, Z parameters from table 6A-7.

For example, if processor 1 is the local processor and has a total of six 16K blocks, follow the horizontal numbers at the top of table 6A-8 to 6; and if processor 2 has a total of two 16K blocks, follow the vertical numbers at the left of the table to 2. At the point where they intersect on table 6A-8, read the parameters:

V = 206
W = 2
X = 0
Y = 7FFF Z=7FFF

From table 6A-8, determine the values for parameters T and U.

TABLE 6A-6. SYSTEM MOS MEMORY CONFIGURATION

	Processor 1		Processor 2	
Slot	Equipment Number	16K Blocks per Board	Equipment Number	16K Blocks per Board
X				
Y				
Z				
AC				
Total Number of 16K Blocks per Processor				

TABLE 6A-7. MOS MEMORY RUN PARAMETERS

16K Blocks per Remote Processor	16K Blocks per Local Processor								Parameters
	1	2	3	4	5	6	7	8	
0	001	002	003	004	005	006	007	008	V
	0	0	0	0	1	1	1	1	W
	0	0	0	0	1	1	1	1	X
	3FFF	7FFF	BFFF	FFFF	3FFF	7FFF	BFFF	FFFF	Y
	3FFF	7FFF	BFFF	FFFF	3FFF	7FFF	BFFF	FFFF	Z
1	101	102	103	104	105	106	107	108	V
	2	2	2	2	2	2	2	2	W
	0	0	0	0	0	0	0	0	X
	3FFF	7FFF	BFFF	FFFF	3FFF	7FFF	BFFF	FFFF	Y
	3FFF	3FFF	3FFF	3FFF	3FFF	3FFF	3FFF	3FFF	Z
2	201	202	203	204	205	206	207	208	V
	2	2	2	2	2	2	2	2	W
	0	0	0	0	0	0	0	0	X
	3FFF	7FFF	BFFF	FFFF	3FFF	7FFF	BFFF	FFFF	Y
	7FFF	7FFF	7FFF	7FFF	7FFF	7FFF	7FFF	7FFF	Z
3	301	302	303	304	305	306	307	308	V
	2	2	2	2	2	2	2	2	W
	0	0	0	0	1	1	1	1	X
	3FFF	7FFF	BFFF	FFFF	3FFF	7FFF	BFFF	FFFF	Y
	BFFF	BFFF	BFFF	BFFF	BFFF	BFFF	BFFF	BFFF	Z
4	401	402	403	404	405	406	407	408	V
	2	2	2	2	2	2	2	2	W
	0	0	0	0	1	1	1	1	X
	3FFF	7FFF	BFFF	FFFF	3FFF	7FFF	BFFF	FFFF	Y
	FFFF	FFFF	FFFF	FFFF	FFFF	FFFF	FFFF	FFFF	Z
5	501	502	503	504	505	506	507	508	V
	3	3	3	3	3	3	3	3	W
	0	0	0	0	1	1	1	1	X
	3FFF	7FFF	BFFF	FFFF	3FFF	7FFF	BFFF	FFFF	Y
	3FFF	3FFF	3FFF	3FFF	3FFF	3FFF	3FFF	3FFF	Z
6	601	602	603	604	605	606	607	608	V
	3	3	3	3	3	3	3	3	W
	0	0	0	0	1	1	1	1	X
	3FFF	7FFF	BFFF	FFFF	3FFF	7FFF	BFFF	FFFF	Y
	7FFF	7FFF	7FFF	7FFF	7FFF	7FFF	7FFF	7FFF	Z
7	701	702	703	704	705	706	707	708	V
	3	3	3	3	3	3	3	3	W
	0	0	0	0	1	1	1	1	X
	3FFF	7FFF	BFFF	FFFF	3FFF	7FFF	BFFF	FFFF	Y
	BFFF	BFFF	BFFF	BFFF	BFFF	BFFF	BFFF	BFFF	Z
8	801	802	803	804	805	806	807	808	V
	3	3	3	3	3	3	3	3	W
	0	0	0	0	1	1	1	1	X
	3FFF	7FFF	BFFF	FFFF	3FFF	7FFF	BFFF	FFFF	Y
	FFFF	FFFF	FFFF	FFFF	FFFF	FFFF	FFFF	FFFF	Z

TABLE 6A-8. ERROR CORRECTION CODE RUN PARAMETER

Local Processor, Slot AC	Parameter T	Parameter U
With Error Correction Code Array	3	789A
Without Error Correction Code Aray	2	78A0

4. Utilizing the parameters derived from tables 6A-7 and 6A-8, enter the required test parameters as called for in the DDLTs:

DDLT/Test	Parameter Word and Input Values
Table 6-6, sheet 1/ MPM0S test	A, --- → Parameter V D, -, --- → Parameter Z → Parameter W
Table 6-6, sheet 8/ M0SMA test	A, --- → Parameter V D, -, -, - → Parameter T → Parameter Y → Parameter X 3, --- → Parameter U
Table 6-9, sheet 1 PAGE1 test	A, --- → Parameter V

A27 Procedure A-27 is not used.

A28 INTERRUPT/EQUIPMENT NUMBER ASSIGNMENT AND MULTIPLE SUBSYSTEMS TESTING

This procedure provides information on the standard assignments of Interrupts and Equipment numbers. A copy of table 6A-10 filled out will normally be installed on the CPU plenim cover. This will identify the Interrupt and Equipment Numbers assigned on that system. If one does not exist, you will have to fill out Table 6-10 in order to run the system diagnostics if any non-standard Interrupts and Equipment Codes are used. {See steps outlined below under Diagnostic Parameter Changes for non-standard Interrupt/ Equipment number assignments.}

Table 6A-12 identifies the normal/ standard Interrupt and Equipment number assignments. These are the assignments used by most systems. A general description of Interrupt/ Equipment number assignments is outlined below under System Interrupt/Equipment Tables.

If a system has multiple controllers installed, the 2nd controller would be required to use a non-standard Interrupt/ Equipment number assignment. The actual Interrupt/Equipment number used will have to be determined in order to be able to

run the diagnostic on that subsystem (see steps outlined below under Determining Interrupt/Equipment Number Assignments).

DETERMINING INTERRUPT/EQUIPMENT NUMBER ASSIGNMENTS

Perform the following:

1. Remove the cabinet side panel and processor cover plate.
2. Locate and remove the controller board from the logic chassis using the tool provided on the inside of the front cover. Refer to table 4A-3, volume 1, for controller board location.
3. Inspect the controller board jumpers and determine the equipment code of the subsystem using the applicable reference listed below:

Subsystem	Reference
Dual channel communications line adapter	Figure 4C-3/ Figure 4S-2 Figure 4S-3
Card reader	Figure 4D-8/ Figure 4S-2 and 4S-3
Line printer	Figure 4F-6/ Figure 4S-2 and 4S-3
Storage module drive	Figure 4J-6
1X8CLA	Figure 4N-2

4. Inspect the backplane wiring to determine which macro and micro interrupt lines are wired to those cards in question. Refer to tables 6A-10, 6A-11, 6A-12 and 6A-13 to determine which interrupt lines are used.

DIAGNOSTIC PARAMETER CHANGES FOR NON STANDARD INTERRUPT/EQUIPMENT NUMBER ASSIGNMENTS

This procedure is used to change the diagnostic parameters for operation on a controller which has non-standard assignments, which includes testing a second controller of a particular type.

Perform the following:

1. Determine the assigned Interrupt/Equipment number used as described above.
2. Reload the test diagnostic and change the equipment code parameters of the diagnostic from the applicable procedure listed below:

Subsystem	Diagnostic	Procedure
Dual channel communications line adapter	CLA1A/2A	A29
Card reader/ line printer controller	CREC0	A29
Card reader	CR104	A30
Line printer	LP408	A30
Storage module drive	SMDDA SMDC4 SMD01	A29 A29 A29
8 channel communications line adapter	CLAxx	A30

3. Change the interrupt parameters of the diagnostic from the applicable procedure listed below:

Subsystem	Diagnostic	Procedure
Dual channel communications line adapter	CLA1A/2A	A31
Card reader	CR104 CREC0	A32
Line printer	LP408 CREC0	A32
Storage module drive	SMDDA SMDCU SMD01	A31 A31 A31
8 channel communications line adapter	CLAxx	A32

4. Restore the processor cover plate and cabinet panels to their original positions.
5. Return to the DDLT and resume testing.

SYSTEM INTERRUPT/EQUIPMENT TABLES

The following tables provide interrupt/equipment number assignment information and interrupt type/origin/destination information necessary to perform tests on multiple subsystems.

Table Definition:

Table 6A-10: System Equipment/Interrupt Assignments.

Previously defined.

Table 6A-11: Standard Controller Slot Assignment Table.

This table lists the CPU card slots and their types. For each card slot position there is a list of equipments that have been assigned. These assignments are for convenience purposes and may be interchanged to fit specific configurations. The only restriction is that AQ/DMA controllers must be installed in AQ/DMA slots. However, the Flexible Disk Drive Controller and the Cassette Controller may be operated from either AQ or AQ/DMA card slots.

Table 6A-12: Recommended Equipment and Interrupt Assignments.

This table shows the standard interrupt and equipment numbers that have been assigned to the various CYBER 18 peripheral products. When multiple equipments, specific equipment configurations, or software requirements create interrupt/equipment number conflicts it will be necessary for the installing/maintaining personnel to change and log them accordingly.

All equipment numbers are selected on the individual controller/interface cards. Refer to the appropriate installation manual section for specific details for selecting equipment numbers on the various peripherals.

This table also shows the micro/macro interrupt output pin assignment for each of the controller/interfaces.

Table 6A-13: Standard Interrupt Wiring

This table shows the standard pre-wired interrupt configuration for AB113A and AA134A backplanes. These may be changed to meet system requirements.

Table 6A-14: Example of filled-out System Equipment/Interrupt Assignment Table - This table is an example of Table 6A-10 after it has been filled in to reflect a specific system.

A29 EQUIPMENT CODE CHANGE, LEVEL I

To change equipment codes needed by the diagnostic software, perform the following:

1. Identify the equipment number for the subsystem to be tested from Table 6A-10. This equipment number corresponds to an equipment code as shown below.

EQUIPMENT NUMBER	EQUIPMENT CODE	PARAMETER INPUT
0	0	0000
1	1	0080
2	2	0100
3	3	0180
4	4	0200
5	5	0280
6	6	0300
7	7	0380
8	8	0400
9	9	0480
10	A	0500
11	B	0580
12	C	0600
13	D	0680
14	E	0700
15	F	0780

2. To the right of the desired equipment code, identify the corresponding parameter input value.
3. Insert this parameter value in the blanks below (step 4).
4. Enter the following at the keyboard: †

   a. Type in 7,____Parameter input to be inserted (see table in step 1)

b. Press CARRIAGE RETURN

c. Return to Procedure A28 and modify interrupt parameters as required.

+ For the CRECO test, enter the following at the keyboard:

a. Type in 7, ____Parameter input from table in Step 1 corresponding to card reader equipment code.

b. Press CARRIAGE RETURN

c. Type in A, ____Parameter input from table in step 1 corresponding to line printer equipment code

d. Press CARRIAGE RETURN

e. Return to Procedure A28 and modify interrupt parameters as required.

A30 EQUIPMENT CODE CHANGE, LEVEL II

To change equipment codes needed by the diagnostic software, perform the following:

1. Identify the equipment number for the subsystem to be tested from table 6A-10. This equipment number corresponds to an equipment code as shown below.

EQUIPMENT NUMBER	EQUIPMENT CODE	PARAMETER INPUT
0	0	0000
1	1	0080
2	2	0100
3	3	0180
4	4	0200
5	5	0280
6	6	0300
7	7	0380
8	8	0400
9	9	0480
10	A	0500
11	B	0580
12	C	0600
13	D	0680
14	E	0700
15	F	0780

2. To the right of the desired equipment code, identify the corresponding parameter input value.

3. Insert this parameter input value in the blanks below (step 4).

4. Enter the following at the keyboard and return to normal DDLT execution:

a. Press CONTROL and BEL simultaneously

b. Type in:
0DS,CPAR,____,7,____
- ____ → Parameter input from table in step 1.
- 7 → Five digit test mnemonic (see test executing message at display)

c. Press CARRIAGE RETURN

d. Return to Procedure A28 and modify interrupt parameters as required.

A31 MICRO AND MACRO INTERRUPT ASSIGNMENT CHANGE, LEVEL I

To change the micro and/or macro interrupt assignments, (table 6A-12) perform the following:

1. Press the CARRIAGE RETURN key to display the parameter control word.

2. Observe parameter word 8.

Caution must be used due to the

fact that micro and macro interrupts are assigned in the same word. If only one word is to be changed, then the unchanged assignment must be reentered. The word is broken down into four hexadecimal fields as follows:

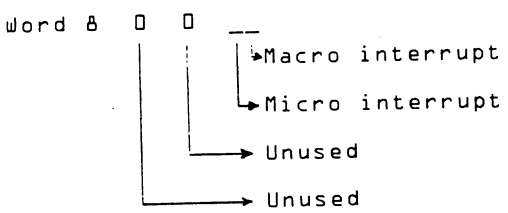

3. Enter the following at the keyboard:†

   a. Type in 8,00__

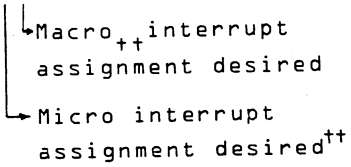

   b. Press CARRIAGE RETURN
   c. Type in GO
   d. Press CARRIAGE RETURN

4. Return to the normal DDLT testing sequence.

A32 MICRO AND MACRO INTERRUPT ASSIGNMENT CHANGE, LEVEL II

To change the micro and/or macro interrupt assignments (table 6A-13) perform the following:

1. Enter the following at the keyboard:
   a. Press CONTROL and BEL simultaneously.
   b. Type in ODS,DPAR,_____

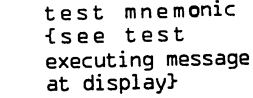

   c. Press CARRIAGE RETURN

2. Observe parameter word 8. Caution must be used due to the fact that micro and macro interrupts are assigned in the same word. If only one word is to be changed, then the unchanged assignment must be reentered. The word is broken down as follows:

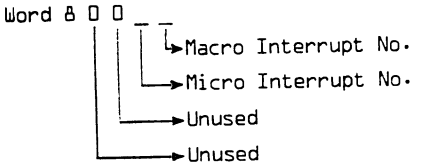

3. Enter the following at the keyboard:

   a. Press CONTROL and BEL simultaneously

   b. Type in:

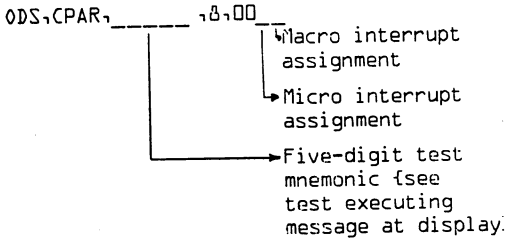

   c. Press CARRIAGE RETURN

   d. Press CONTROL and BEL simultaneously

   e. Type in ODS,GO_____

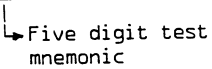

   f. Press CARRIAGE RETURN

4. Return to normal DDLT testing sequence.

A33 LOADING DIAGNOSTIC CARDS WITH CARD READER

To load the diagnostic card decks, perform the following:

1. Turn the power on (procedure A3).
2. Remove the card weight from the card reader hopper.
3. Fan both ends of the diagnostic card deck to break the bond between the cards. Align the cards by jogging the card deck on a smooth flat surface.
4. Place the diagnostic card deck in the card hopper, placing the cards face down with the 9-edge towards the back of the hopper.

---

†For the CRECO test, enter the following at the keyboard:

a. Type in 8,00__

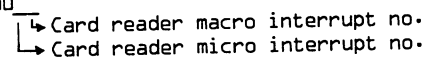

b. Press CARRIAGE RETURN

c. Type in B,00__

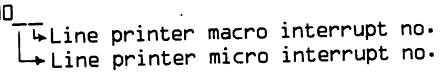

d. Press CARRIAGE RETURN

†† Each interrupt is a single hexadecimal number.

5. Place the card weight on top of the cards.
6. Press the RESET button on the card reader.
7. Return to table 6-3 and continue.

A34 MEMORY PARITY ERROR CLEARING

To clear a memory parity error, perform the following:

1. Master clear the system by pressing the MASTER CLEAR button on the operators panel.
2. Press the ESC key on the console display keyboard.
3. Enter the following on the keyboard:
   K71602800:
4. Enter the following on the keyboard:
   K0000:
5. Enter the following on the keyboard:
   L6A03: 0D01: 18FD:
6. Press the MASTER CLEAR button on the operators panel.
7. Press the ESC key on the keyboard.
8. Enter the following on the keyboard:
   K71602800:
9. Enter the following on the keyboard:
   K0000:
10. Enter the following on the keyboard to start the program:
    I:
11. After approximately three seconds, press MASTER CLEAR on the operators panel.
12. Restart with table 6-3.

PROJECT: _____ PROCESSOR TYPE: _____ S/N _____

1. This form provides specific equipment and interrupt number assignment information for the above system.
2. The backplane interrupt wiring for the above equipment is shown in the Backplane Interrupt Pin Assignment column.
3. Equipment numbers as shown have been selected on respective peripheral controllers/interfaces.
4. Keep this form updated for any/all equipment and/or interrupt number changes that may occur on the above system processor.

PRODUCT NUMBER	EQUIPMENT NUMBER	DESCRIPTION	SLOT ASSIGNMENT	SLOT TYPE	EQUIPMENT NUMBER	INTERRUPT NUMBER	INTERRUPT TYPE	BACKPLANE INTERRUPT PIN ASSIGNMENT	
								CARD SLOT PIN	BACKPLANE PIN
		CP	J	AQ			MACRO		
							MICRO		
		LP					MACRO		
							MICRO		
							MACRO		
							MICRO		
			H	AQ/DMA			MACRO		
							MICRO		
			G	AQ/DMA			MACRO		
							MICRO		
			F	AQ			MACRO		
							MICRO		
			E	AQ			MACRO		
							MICRO		
			D	AQ/DMA			MACRO		
							MICRO		
			C	AQ			MACRO		
							MICRO		
			B	OPEN†			MACRO		
							MICRO		
			A	AQ/DMA			MACRO		
							MICRO		
			MA	AQ			MACRO		
							MICRO		
							MACRO		
							MICRO		
			AB	DMA/ AQ			MACRO		
							MICRO		

TABLE 6A-10: SYSTEM EQUIPMENT/INTERRUPT NUMBER ASSIGNMENTS

† Slot B is normally unwired and not used; it is reserved for future system expansion.

TABLE 6A-11: STANDARD CONTROLLER SLOT ASSIGNMENT TABLE

CYBER 18 MOS BASIC PROCESSOR

SLOT	TYPE	CONTROLLER TYPE †
J	A/Q	CR/LP, CR/LP/CLA
H	A/Q-DMA	SMD, CDD
G	A/Q-DMA	LCTT (DUAL MODE)
F	A/Q	8CCLA, DCCLA
E	A/Q	FDD, CASSETTE
D	A/Q-DMA	SDLC CLA, B-CLA, FDD
C	A/Q	RESTART LOADER, B-CLA EXP.
B	OPEN ++	B-CLA EXPANSION
A	A/Q-DMA	B-CLA, SDLC CLA DMA EXP
AA	A/Q	IOM, PTR/PTP, A/Q EXP, DCCLA
AB	SET/SAM	LCTT (NRZI)

† FIRST DEVICE SHOWN REPRESENTS THE PRIMARY SLOT ASSIGNMENT. SECOND AND THIRD DEVICES REPRESENT ALTERNATE ASSIGNMENTS. IN SYSTEM CONFIGURATIONS WITH MULTIPLE DEVICES OR WHERE CONFIGURATION CONFLICTS EXIST, IT WILL BE NECESSARY TO REARRANGE SLOT ASSIGNMENTS ACCORDINGLY.

++ SLOT B IS NORMALLY UNWIRED AND NOT USED; IT IS RESERVED FOR FUTURE SYSTEM EXPANSION. THE PRIMARY FUTURE ASSIGNMENT IS TO B-CLA EXPANSION.

TABLE 6A-12: RECOMMENDED EQUIPMENT AND INTERRUPT ASSIGNMENTS FOR CYBER 18 BASIC MOS PROCESSOR

NOTE: When interrupt and equipment number assignments conflict, reselect these numbers as required.

PERIPHERAL CONTROLLER/INTERFACE	EQUIP. NUMBER	STANDARD INTERRUPT ASSIGNMENTS		CONTROLLER BACKPLANE INTERRUPT PIN ASSIGNMENT	
		MACRO	MICRO	MACRO	MICRO
CR/LP/CLA (CR)	11	11*	11*	49	50
(LP)	4	4*	4*	249	250
(CLA)	10	10	10	77	277
CR/LP (CR)	11	11*	11*	49	50
(LP)	4	4*	4*	249	250
CASSETTE	7	7*	7*	249	250
FDD AQ	7	7*	n/u	249	n/u
AQ/DMA	13	13*	n/u	249	n/u
SMD	14	14*	n/u	249	n/u
DCCLA	10	10*	10	249	250
BCCLA	10	10*	10	249	250
SDLC CLA	13	13*	n/u	249	n/u
LCTT (NRZI)	9	9*	9*0*	249	250
LCTT (DUAL MODE)	12	12	n/u	249	n/u
CDD	14	14*	n/u	249	n/u
1X8CLA	10	10*	n/u	249	250
RESTART LOADER	6	6	n/u	249	n/u
PTR/PTP	2	2*	2*	249	250
IOM ① ②	2	2*	n/u	49	n/u
	3	3	n/u	249	n/u
AQ EXP.	n/u	not assigned		249	250
DMA EXP.	n/u	not assigned		249	250

* These interrupts are prewired on AA133A, AB113A, and AA132Aand AA134A processor backplanes.

① The 1850-1 is capable of providing up to eight interrupts that may be routed to the SMI board. Refer to manual 96768320 (18/1500 Series Adapter) for additional pin out assignments.

② The 1850-1 cannot be installed in Card Slots that have Deadstart capability.

TABLE 6A-13: STANDARD INTERRUPT WIRING ON CYBER 18 MOS PROCESSOR

INTER-RUPT NUMBER	BACKPLANE PIN ASSIGNMENT FOR MACRO INTERRUPT			BACKPLANE PIN ASSIGNMENT FOR MICRO INTERRUPT		
	TERM NAME	SMI PIN ASSIGNMENT	CONT/I'F PIN ASSIGNMENT	TERM NAME	SMI PIN ASSIGNMENT	CONT/I'F PIN ASSIGNMENT
0	RPINT16/	L-69 *	R-277 *	n/u	L227 *	L230 *
1	RPINT17/	L-269 *	K-58 *	RDINT01/	L-27 *	K-242 *
2	RPINT18/	L-270	AA-49	RDINT02/	L-32	AA-50
3	RPINT19/	L-70		RDINT03/	L-232	
4	RPINT20/	L-72	J-249	RDINT04/	L-28	J-250
5	RPINT21/	L-272 *	K-75 *	RDINT05/	L-31	
6	RPINT22/	L-271		RDINT06/	L-231	
7	RPINT23/	L-71	E-249	RDINT07/	L-228	E-250
8	RPINT24/	L-73 *	K-285 *	RDINT08/	L-30 *	K-86 *
9	RPINT25/	L-274	AB-249	RDINT09/	L-230	AB-250
10	RPINT26/	L-74	F-249	RDINT10/	L-229	F-250
11	RPINT27/	L-273	J-49	RDINT11/	L-29	J-50
12	RPINT28/	L-277	AB-49	RDINT12/	L-33 *	K-85 *
13	RPINT29/	L-276	D-249	RDINT13/	L-226*	K-272 *
14	RPINT30/	L-77	H-249	RDINT14/	L-233 *	U-99 *
15	RPINT31/	L-275	A-49	RDINT15/	L-234 *	L-283; K-279; U-54 *

* THESE PIN ASSIGNMENTS CANNOT BE USED FOR INTERRUPTS ON 18-xx MOS PROCESSOR WHEN IT IS USED IN THE 1700 EMULATION MODE. THEY ARE UTILIZED FOR INTERNAL CPU FUNCTIONS.

PROJECT: SAMPLE SYSTEM PROCESSOR TYPE: AA/32A S/N: XXX

1. This form provides specific equipment and interrupt number assignment information for the above system.
2. The backplane interrupt wiring for the above equipment is shown in the Backplane Interrupt Pin Assignment column.
3. Equipment numbers as shown have been selected on respective peripheral controllers/interfaces.
4. Keep this form updated! Log any/all equipment and/or interrupt number changes that may occur on the above system processor.

PRODUCT NUMBER	EQUIPMENT NUMBER	DESCRIPTION	SLOT ASSIGNMENT	SLOT TYPE	EQUIPMENT NUMBER	INTERRUPT NUMBER	INTERRUPT TYPE	BACKPLANE INTERRUPT PIN ASSIGNMENT: CARD SLOT CONN.	BACKPLANE INTERRUPT PIN ASSIGNMENT: CONNECTOR PINS
1828-1	FH30A	CR/LP CONT'L — CR	J	AQ	11	11	MACRO	J-49	L-273
							MICRO	J-50	L-29
		LP			4	4	MACRO	J-249	L-72
							MICRO	J-250	L-28
		N.U.			—	—	MACRO	—	—
							MICRO	—	—
1833-4	FA11A	CDD CONT'L	H	AQ/DMA	14	14	MACRO	H-249	L-77
							MICRO	N.U.	N.U.
1860-5	FA464	D.M. LCTT CONT'L	G	AQ/DMA	12	12	MACRO	G-249	L-277
							MICRO	N.U.	N.U.
			F	AQ			MACRO		
							MICRO		
		FLEX DISK DRIVE CONT'L (FDD)	E	AQ	7	7	MACRO	E-249	L-71
							MICRO	N.U.	N.U.
			D	AQ/DMA			MACRO		
							MICRO		
1843-1	FJ44A	2 CHN CLA	~~A~~ AA	AQ	2	2	MACRO	AA-249	L-270
							MICRO	AA-250	L-32
			B	OPEN			MACRO		
							MICRO		
			A	AQ/DMA			MACRO		
							MICRO		
1828-1	FH30A	CR/LP CONT'L — CR	~~B~~ C	AQ	6	6	MACRO	C-49	L-271
							MICRO	C-50	L-231
		LP			3	3	MACRO	C-249	L-70
							MICRO	C-250	L-232
			AB	SDT/SAM			MACRO		
							MICRO		

TABLE 6A-14: SYSTEM EQUIPMENT/INTERRUPT NUMBER ASSIGNMENTS

A35 RUN PARAMETERS FOR MICRO MEMORY TEST - MIMEM -

NOTES:

1. Read the entire procedure before entering parameters into the computer as required by the DDLT's.

2. Some systems have only a single processor (CPU 1) and some have dual processors (CPU 1 and CPU 2). In a dual processor system micro memory tests will be performed on both CPU 1 and CPU 2. The local processor is the one in which the diagnostic resides and can be either CPU 1 or CPU 2. When entering the test parameters into the computer as required by the DDLT's, be sure that the parameter is from the table for the CPU being tested.

3. The parameter changes that follow are valid only if the micro memories are switch selected per Table 4A-5.

1) Remove the side panel from the cabinet of the CPU being tested.

2) Examine the FCO tags for slots T and S on the front cover of the processor to determine what micro memory features are installed. The following conditions may be observed:

A. Slots T and S may both be empty. If Slots T and S are empty, this CPU does not contain micro-memory, and the MIMEN test can not be run. Proceed to the next table.

B. Slots T and S may have only 1 slot filled.

In the CYBER 18-30, CPU 2 micro-memory is always installed in Slot T only.

Determine from the FCO tag which of the following boards are installed in Slots T or S. Place a check mark in the appropriate row of the table for the CPU being tested.

CPU 1 TEST PARAMETERS TABLE

Slot S or T Equipment No.	Description	Parameter D	Parameter 11	Check
BA209	512 Instr. Micro-Memory	4	4	
BA210	2048 Instr. Micro-Memory	7	7	

CPU 2 TEST PARAMETERS TABLE

Slot T (only) Equipment No.	Description	Parameter D	Parameter 11	Check
BA209	512 Instr. Micro-Memory	4	4	
BA210	2048 Instr. Micro-Memory	7	7	

C. Slots T and S may both be filled. (CPU 1 only) Examine the FCO tags for slots T and S and determine which of the following boards are installed. Place a check in the appropriate row of the table for the CPU being tested.

CPU 1 TEST PARAMETER TABLE

Slot T Equipment No.	Slot S Equipment No.	Parameter D	Parameter 11	Check
BA209	BA209	5	5	
BA210	BA210	B	B	
BA209	BA210	8	8	
BA210	BA209	8	8	

3) Using the parameters D and 11 derived in the appropriate section above, enter these test parameters as called for in the DDLT's:

D, ___ (Parameter D from appropriate table above)

11, ___ (Parameter 11 from appropriate table above)

Procedure A36: Run Parameters for cassettes and diskettes in non-standard system configurations

Standard CYBER systems support either diskettes or cassettes, but not both. In systems which have both diskettes and cassettes, the standard ODS load device is the diskette. If the CASEC or CASET tests are being run with the diskette as the load device, or if the FDSKA test is being run with the cassette as the load device, run parameters must be modified as shown herein.

A. CASEC test is being run with diskette as the ODS load device

1- Remove the side panel from the cabinet of the CPU being tested.

2- Examine the FCO tags for the A/Q slots and determine the location of the FA104-A cassette controller.

3- Remove the cassette controller and determine the equipment code by comparing the equipment code switch setting with the equipment code select settings of Figure 4H-2.

4- Type 8, TT where T corresponds to the equipment code. Press CARRIAGE RETURN

5- Type 7, parameter V where V is the parameter in Table 6A-16 corresponding to the equipment code.

Press CARRIAGE RETURN

6- Return to Table 6-12 and continue the normal DDLT testing sequence.

B. CASET test is being run with diskette as the ODS load device

1- Remove the side panel from the cabinet of the CPU being tested.

2- Examine the FCO tags for the A/Q slots and determine the location of the FA104-A cassette controller.

3- Remove the cassette controller and determine the equipment code by comparing the equipment code switch setting with the equipment code select settings of figure 4H-2.

4- Press CONTROL and BEL simultaneously. Type ODS, CPAR, CASET, 8, TT Where T corresponds to the equipment code.

Press CARRIAGE RETURN

5- Press CONTROL and BEL simultaneously. Type ODS, CPAR, CASET, 7, parameter V where V is the parameter in table 6A-16 corresponding to the equipment code.

Press CARRIAGE RETURN

6-Return to table 6-52 and continue the normal DDLT testing sequence.

C. FDSKA test is being run with cassette as the ODS load device

1- Remove the side panel from the cabinet of the CPU being tested.

2- Examine the FCO tags for the A/Q-DMA slots and determine the location of the FA730-A flexible disk drive controller.

3- Remove the flexible disk drive controller and determine the equipment code by comparing the equipment code switch setting with the adaptor switch setting of figure 4K-2.

4- Press CONTROL and BEL simultaneously. Type ODS, CPAR, FDSKA, 8, T Where T corresponds to the equipment code in hex. This parameter changes the macro interrupt assignment.
Press CARRIAGE RETURN

5- Press CONTROL and BEL simultaneously. Type ODS, CPAR, FDSKA, 7, parameter V where V is the parameter in Table 6A-16 corresponding to the equipment code.

Press CARRIAGE RETURN

6- Return to Table 6-53 and continue the normal DDLT testing sequence.

EQUIPMENT CODE (IN HEX)	PARAMETER V
0	0000
1	0080
2	0100
3	0180
4	0200
5	0280
6	0300
7	0380
8	0400
9	0480
A	0500
B	0580
C	0600
D	0680
E	0700
F	0780

TABLE 6A-16

A37 Determining Diskette Contents

To determine the contents of a diskette, perform the following:

1. Load the Level II monitor in accordance with Table 6-50.

2. After ODS X.X is displayed (X.X is the release level), the following is entered at the keyboard:

   CONTROL and BEL keys are pressed simultaneously.

   ODS, LIST is typed in.

   CARRIAGE RETURN is pressed.

3. The response will be a list of all tests contained on that diskette. After the Level II monitor is loaded, the contents of any other diskette (including Level I diskettes) can be determined by loading the diskette in question and performing the actions of item 2 above.

BREAKPOINT PANEL PROCEDURES 6B

CONTENTS

Procedure		Page
B1	Breakpoint Panel Replacement	6B-1
B2	Breakpoint Controller Replacement	6B-1
B3	Interface Cable Installation	6B-1

Figure		Page
6B-1	Breakpoint Panel Mounting	6B-1
6B-2	Interface Cable Connections	6B-2

B1 BREAKPOINT PANEL REPLACEMENT

To replace the breakpoint panel (figure 6B-1), perform the following:

1. Turn off power to the processor and open the right side panel of the cabinet for access to processor 1 or the left side for access to processor 2.
2. Remove the interface cable from the breakpoint panel at connector J1.
3. Remove the mounting screws at the bottom of the panel. See figure 6B-1.
4. Replace the breakpoint panel with the new one by reversing the above steps.

B2 BREAKPOINT CONTROLLER REPLACEMENT

To replace the breakpoint controller, perform the following:

1. Open the right side panel of processor cabinet for access to processor 1 or the left side panel for access to processor 2.
2. Remove the processor cover plate by rotating the two captive fasteners.
3. Disconnect the interface cable from the controller.
4. Use the extractor tool attached to the cover plate and remove the controller. (Refer to table 4A-3, volume 1, for location of the controller.)
5. Position the new controller in front of the processor chassis so that the components are facing left. Reconnect the interface cable.
6. Insert the controller in its assigned position in the logic chassis and set the controller by applying firm pressure at the top and bottom of the controller. The controller is properly installed only when fully seated.
7. Replace the extractor tool and the cover plate and close the side panel.

B3 INTERFACE CABLE INSTALLATION

To install the interface cable (figure 6B-2), perform the following:

1. Open the processor right side panel of the cabinet for access to processor 1 and the left side panel for access to processor 2.
2. Remove the processor cover plate by releasing the two captive fasteners.
3. Use the extractor tool attached to the cover plate and pull the controller out far enough to gain access to the interface cable connector. (Refer to table 4A-3, volume 1, for the location of the controller.)
4. Remove the interface cable from the controller.
5. Remove the interface cable from the breakpoint panel at connector J1 (figure 6B-2).
6. Replace the interface cable by reversing the above procedure.

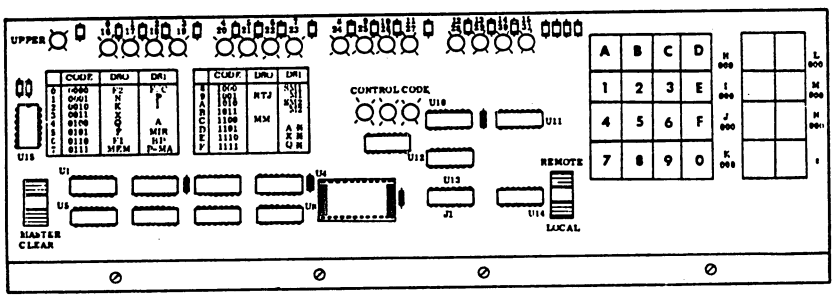

Figure 6B-1. Breakpoint Panel Mounting

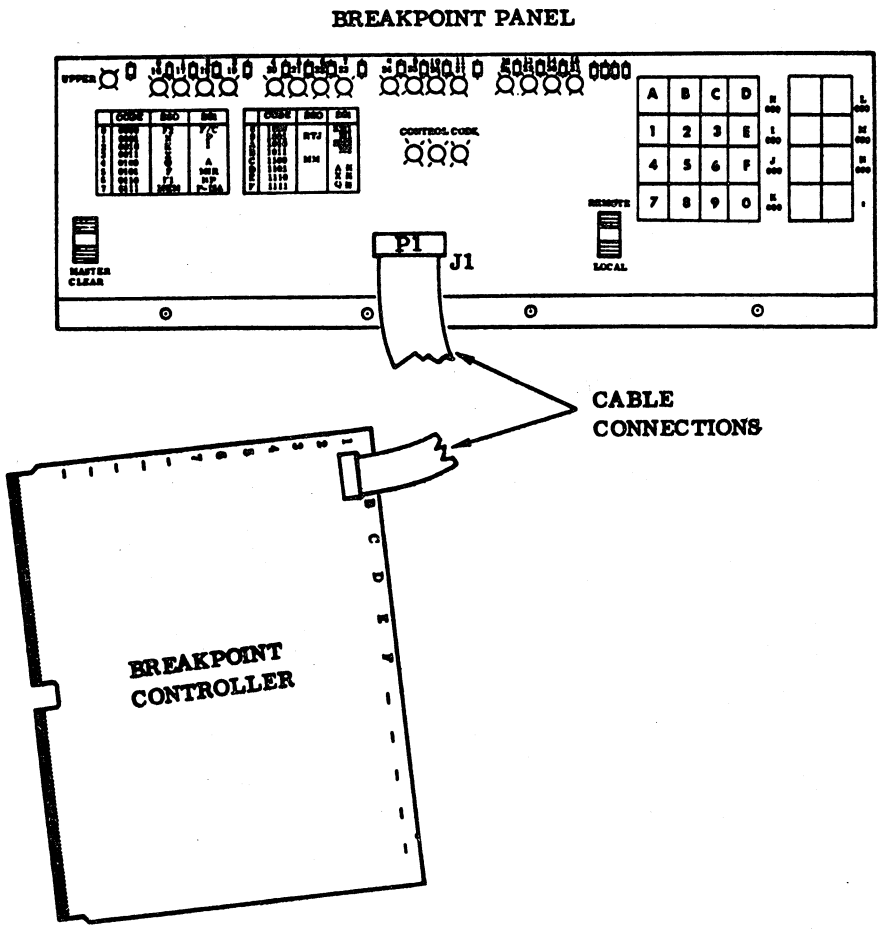

Figure 6B-2. Interface Cable Connections

COMMUNICATIONS LINE ADAPTER

CONTENTS

Procedure		Page
C1	Communications Line Adapter Installation/Replacement	6C-1

Figure		Page
6C-1	Communications Line Adapter Printed Circuit Board	6C-1

C1 COMMUNICATIONS LINE ADAPTER INSTALLATION/REPLACEMENT

To install or replace the communications line adapter (figure 6C-1), perform the following:

1. This printed circuit board may be installed while the system power is still on; however, it is generally a good practice to turn the processor power off (procedure A4) while inserting the board.
2. Open the right side panel of the processor cabinet.
3. Remove the processor cover plate by rotating the two captive fasteners counterclockwise.
4. Locate the printed circuit board position. (See table 4A-3 in volume 1.)
5. Using the extractor tool attached to the cover plate, remove the printed circuit board from the chassis.
6. Before isntalling the new printed circuit board, verify that the switches are set up to correspond to the normal operating positions shown in figures 4C-2, 4C-3, 4C-4, and 4C-5 in volume 1.
7. Position the board in its assigned location with the component side facing left.
8. Seat the board into the back panel connector by applying firm thumb pressure at the upper and lower corners of the board.
9. Replace the panels, turn on the power (procedure A3), and execute the diagnostic tests specified in table 6-3.

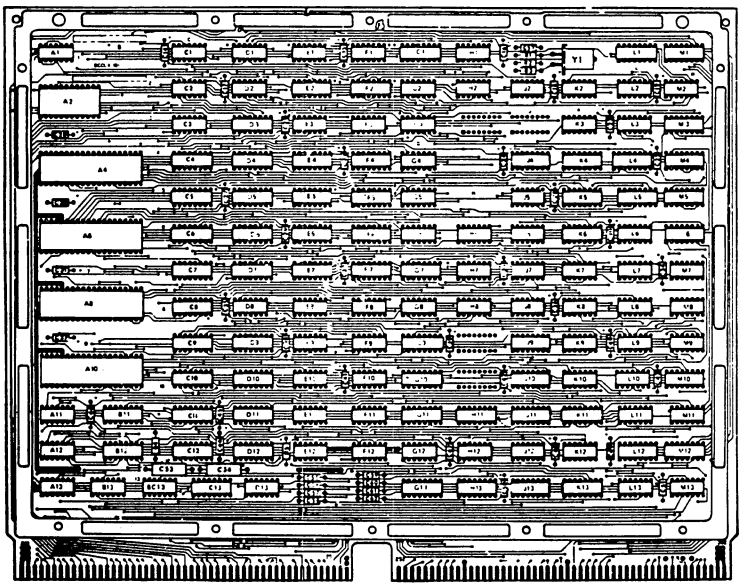

Figure 6C-1. Communications Line Adapter Printed Circuit Board

CARD READER PROCEDURES 6D

Procedure		Page
D1	Power Turn-On	6D-1
D2	Power Turn-Off	6D-1
D3	Loading Diagnostics	6D-1
D4	Off-Line Operation	6D-2
D5	+5 V dc Power Supply Check	6D-4
D6	+17 V dc Power Supply Check	6D-4
D7	Hopper Empty Switch Check	6D-4
D8	Stacker Full Switch Check	6D-6
D9	Control Panel Indicator and/or Switch Check	6D-9
D10	Switch Board and Cable Replacement	6D-10
D11	Amplifier Board Replacement and Timing/Read Lamp Adjustment	6D-11
D12	Data Board Replacement	6D-16
D13	Control Board Replacement	6D-17
D14	Read Head Assembly Replacement	6D-18
D15	Drive Motor Replacement	6D-22
D16	Stacker Drive Assembly Replacement	6D-22
D17	Clearing A Card Jam	6D-24
D18	Head Skew Adjustment	6D-25
D19	Clearing the Card Reader	6D-28
D20	Feed Solenoid Replacement	6D-29
D21	Read Head Lamp Replacement	6D-32
D22	Timing Lamp Replacement	6D-33
D23	Throat Gap Adjustment	6D-33
D24	Power Supply Replacement	6D-36
D25	Card Reader/Line Printer Controller Replacement	6D-37
D26	Hopper Empty Switch Replacement	6D-37
D27	Feed Plate Adjustment/Check	6D-39
D28	Timing Mask/Phototransistor Replacement	6D-41
D29	Timing Disk Replacement	6D-41
D30	Drive Belt Replacement	6D-41
D31	Data and Sync Error Correction	6D-43
D32	CRUT2 Informative Timing Routine Execution	6D-46

Figure		Page
6D-1	Card Reader Main Power Switch	6D-1
6D-2	Read Adjust Card	6D-2
6D-3	Skew Adjust Card	6D-3
6D-4	Amplifier Setting Card	6D-3
6D-5	Card Reader/Line Printer Controller	6D-4
6D-6	+5 V dc and +17 V dc Test Points	6D-5
6D-7	Hopper Empty Switch	6D-6
6D-8	Stacker Full Switch	6D-7
6D-9	Bypass Interlock Switch	6D-8
6D-10	Stacker Full Switch	6D-9
6D-11	Switch Board and Cable	6D-10
6D-12	Deck Locking Screw	6D-12
6D-13	Deck Assembly	6D-13
6D-14	Read Head Lamp Test Points	6D-14
6D-15	Interlock Switch Location	6D-15
6D-16	Data Board Connections	6D-16
6D-17	Control Board Location	6D-17
6D-18	Mechanical Deck Assembly Identifying the Read Head Assembly	6D-19
6D-19	Hopper/Stacker Assemlby	6D-20
6D-20	Amplifier Board and Drive Motor Assemblies	6D-21
6D-21	Stacker Belt Drive	6D-23
6D-22	Stacker Spring and Disk	6D-23
9D-23	Power Switch Location	6D-24
6D-24	Card Feed Assembly	6D-25
6D-25	Card Reader Test Deck (Skew Adjust)	6D-26
6D-27	Bypass Interlock Switch Location	6D-27
6D-28	Read Adjust Screws	6D-28
6D-29	Trim Panel Mounting	6D-30
6D-30	Feed Solenoid	6D-31
6D-31	Deck Locking Screw	6D-32
6D-32	Read Head Assembly	6D-32
6D-33	Timing Lamp	6D-34
6D-34	Removing the Input Hopper	6D-35
6D-35	Feed Mechanism Components	6D-36
6D-36	Power Supply	6D-37
6D-37	Card Reader/Line Printer Controller	6D-38
6D-38	Replacing the Hopper Empty Switch	6D-38
6D-39	Deck Cover (Trim Panel) Mounting/Removal	6D-39
6D-40	Feed Plate-to-Drum Mechanical Check	6D-40
6D-41	Feed Plate Stroke Adjust	6D-40
6D-42	Timing Mask/Phototransistor, Timing Deck, and Drive Belt Replacement	6D-42
6D-43	Sync Adjust Card	6D-43
6D-44	Read Adjust Card	6D-43

Table		Page
6D-1	Data Errors and Fault Isolation	6D-45



D1 POWER TURN-ON

To turn the power on, perform the following:

1. Check that the card reader ac power cord is connected to the site power distribution box in the equipment cabinet (figure 6D-1).

2. Place rear-panel toggle switch S1 up. The POWER ON indicator illuminates.

D2 POWER TURN-OFF

To turn the power off, place rear-panel toggle switch S1 down (see figure 6D-1). The POWER ON indicator extinguishes.

D3 LOADING DIAGNOSTICS

To load the card reader diagnostic, perform the following:

1. Remove the card weight from the card reader.

2. Fan both ends of the diagnostic portion of the card deck to break the bond between the cards.

3. Align the cards in the deck by jogging the card deck on a smooth flat surface prior to placing it in the hopper.

4. Place the diagnostic portion of the card deck in the card reader hopper, placing the cards face down with the 9-edge toward the back of the hopper.

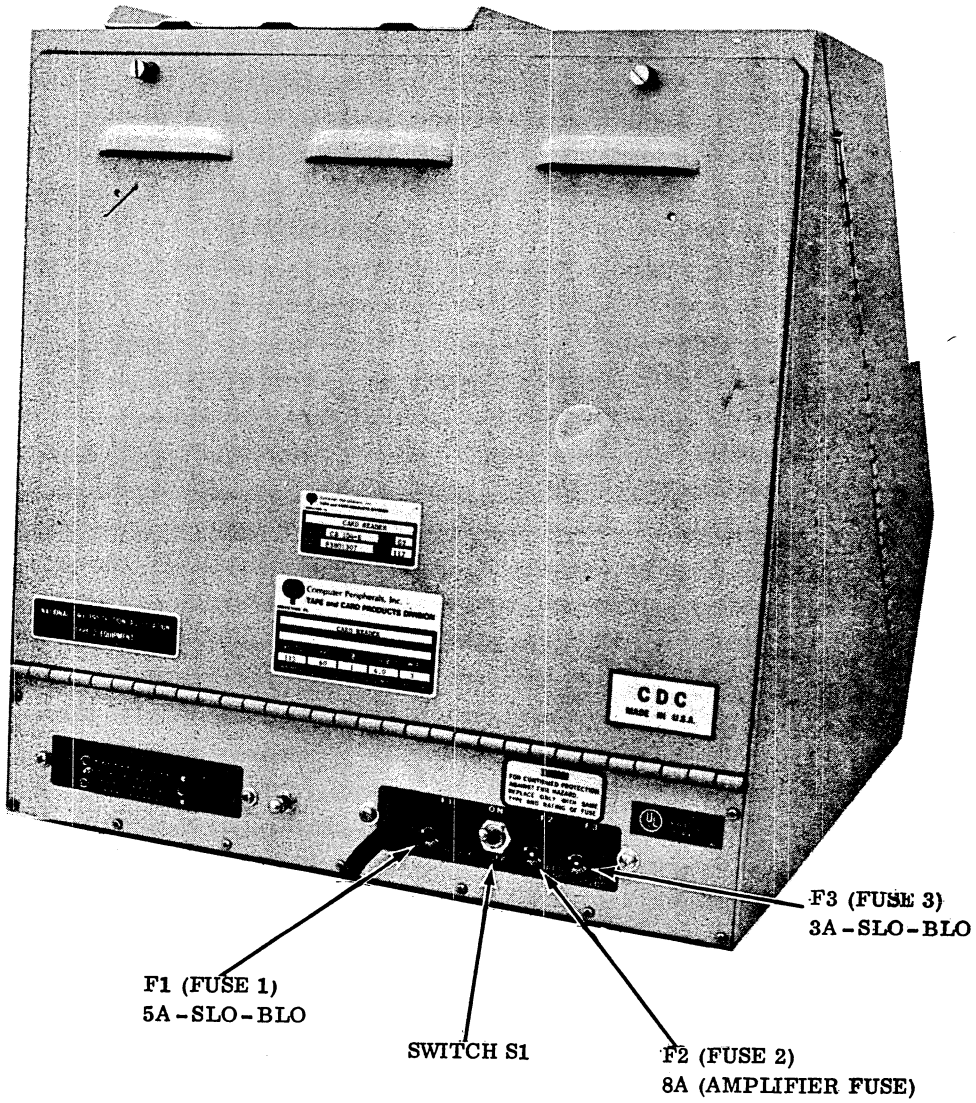

Figure 6D-1. Card Reader Main Power Switch

5. Place the card weight on top of the cards.

6. Press the RESET indicator/switch. The drum turns, the RESET indicator illuminates and then extinguishes after 14 ±5 seconds, and the drum stops turning.

D4 OFF-LINE OPERATION

The card reader off-line operation test may be performed in either of the two following configurations:

- Internal continuous feed operation (not connected to card reader/line printer controller)
- External continuous feed operation (connected to the card reader line printer controller)

Internal Continuous Feed Operation

Disconnect the interface cable from the card reader:

1. Rotate the fasteners at the upper edge of the rear panel counterclockwise, and swing down the rear panel.
2. Loosen the two screws at the right edge of the data board (the smaller of the two boards mounted on the rear panel), and swing it up.
3. Note and record the positions of the switches on both the data and control boards. (Refer to figure 4D-7 and tables 4D-2 and 4D-3 in volume 1 for normal switch settings.)
4. Set the EFP switch on the data board to the off position.
5. Set the FDST switch on the control board to the on position.
6. Place the cards in the hopper with the 9-edge face down at the back edge of the hopper. When RESET is pressed, the cards will process. The off-line test deck is comprised of:

   Read adjust, buff (figure 6D-2)

   Skew adjust, buff (figure 6D-3)

   Amplifier settling, blue (figure 6D-4)

7. When feeding is finished, return the switches to their original positions.
8. Lower the data board, and secure the two screws at the board's right edge. Reconnect the interface cable to the card reader.
9. Close the rear panel.

External Continuous Feed Operation

1. Place the cards in the hopper, with the 9-edge face down at the back edge of the hopper.
2. Remove the card chassis panel. Place the feed switch on the front edge of the card reader/line printer controller toward the rear of the chassis (figure 6D-5 or figure 6S-11). The cards will process.
3. When feeding is finished, return the switch to its original position. Return the card chassis panel.

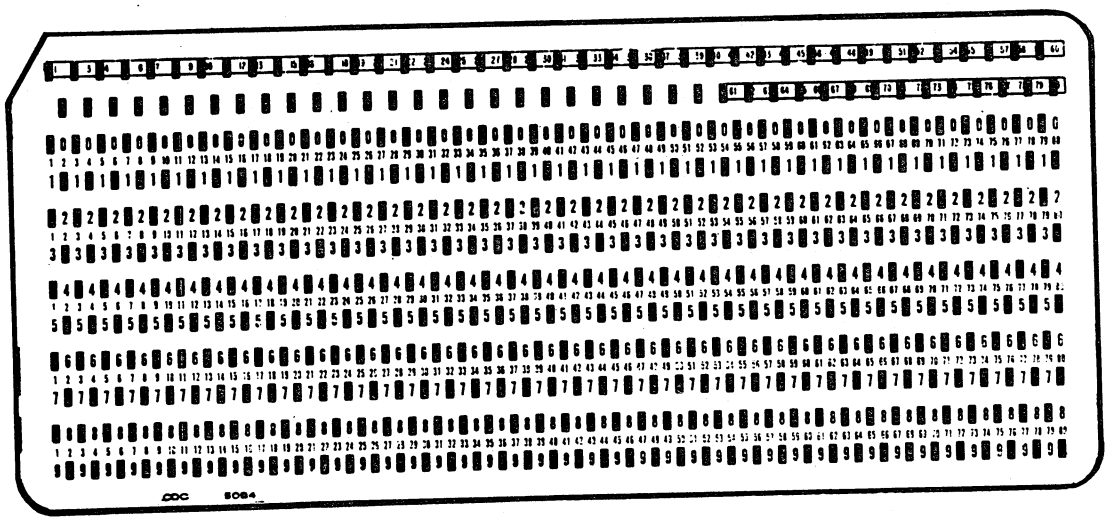

Figure 6D-2. Read Adjust Card

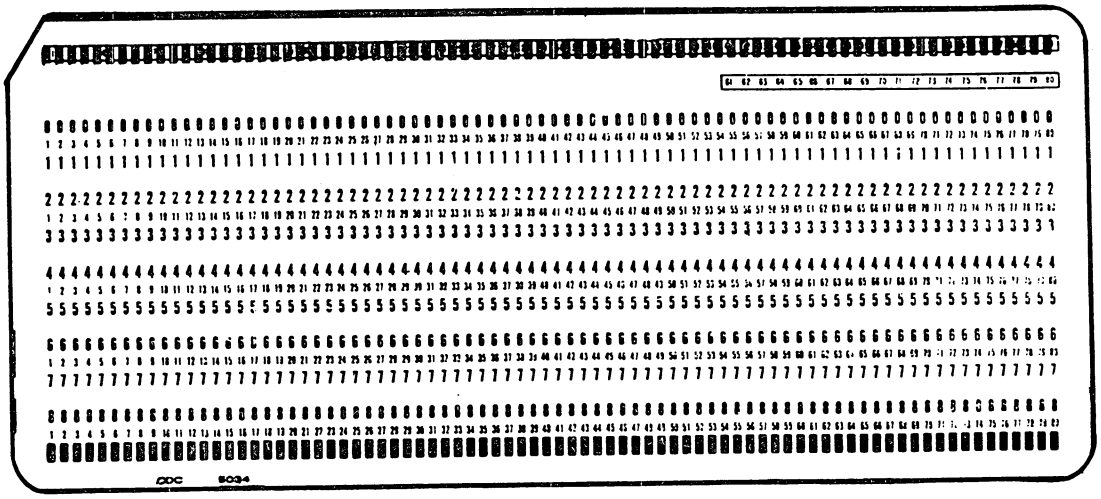

Figure 6D-3. Skew Adjust Card

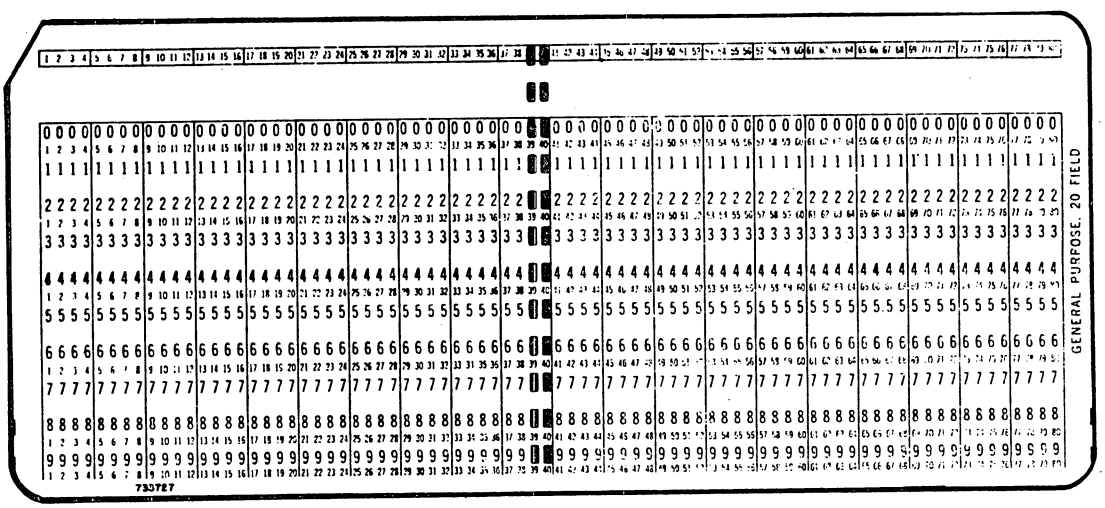

Figure 6D-4. Amplifier Settling Card

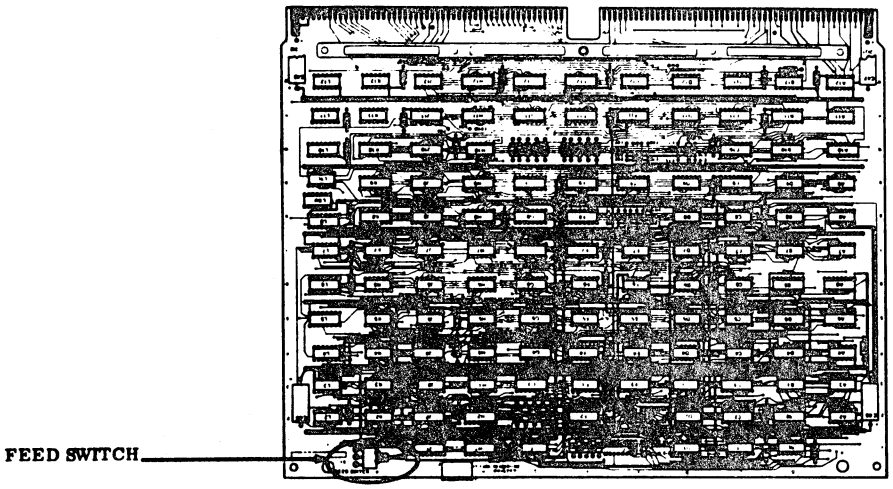

Figure 6D-5. Card Reader/Line Printer Controller

D5 +5 V dc POWER SUPPLY CHECK

To check the +5 V dc power supply of the card reader, perform the following (check the fuses at the back of the card reader):

1. Rotate the fasteners at the upper edge of the rear panel counterclockwise, and swing down the rear panel.
2. Set the multimeter to read greater than +5 V dc.
3. Connect the negative test lead of the multimeter to the GND terminal (E3) of the terminal strip at the top center of the control board (the control board is the larger of the two boards mounted on the rear panel, figure 6D-6).
4. Connect the positive test lead of the multimeter to the +5 V dc terminal (E4) of the terminal strip. Check that the multimeter reads +5 ±0.25 V dc.
5. If the multimeter indicates that the power supply is out of specification, replace it according to procedure D24.

D6 +17 V dc POWER SUPPLY CHECK

To check the card reader +17 V dc power supply, perform the following (check the fuse at the back of the card reader):

1. Rotate the fasteners at the upper edge of the rear panel counterclockwise, and swing down the panel.
2. Set the multimeter to read greater than +17 V dc.
3. Connect the negative test lead of the multimeter to the GND terminal (E3) of the terminal strip at the top center of the control board (the control board is the larger of the two boards mounted on the rear panel, figure 6D-6).
4. Connect the positive test lead of the multimeter to the 17 V dc terminal (E5) of the terminal strip. Check that the multimeter reads +17 ±2 V dc.
5. If the multimeter indicates that the power supply is out of specification, replace it according to procedure D24.

D7 HOPPER EMPTY SWITCH CHECK

To check the card reader hopper empty switch (figure 6D-7), perform the following.

1. Place the switches on the control and data cards for on-line operation and proceed as follows (refer to section 4D of volume 1):
   a. Remove the card weight and any cards from the card hopper.
   b. Insert one card in the hopper. Replace the card weight.
   c. Press the RESET indicator/switch. Check that the RESET indicator illuminates, that motor power comes up, and that the motors run for approximately 15 seconds. If the motors stop immediately and the hopper light illuminates, go to step 2 and perform fault isolation of the hopper empty switch.
   d. Remove the weight and card while the RESET indicator is illuminated and motor power is up. If the RESET indicator extinguishes and motor power drops before releasing the hopper empty switch, press the RESET indicator/switch again.

      Check that the RESET indicator extinguishes and motor power drops immediately when the hopper empty switch is released. Check that the hopper empty indicator illuminates. If the RESET indicator extinguishes and motor power drops when the

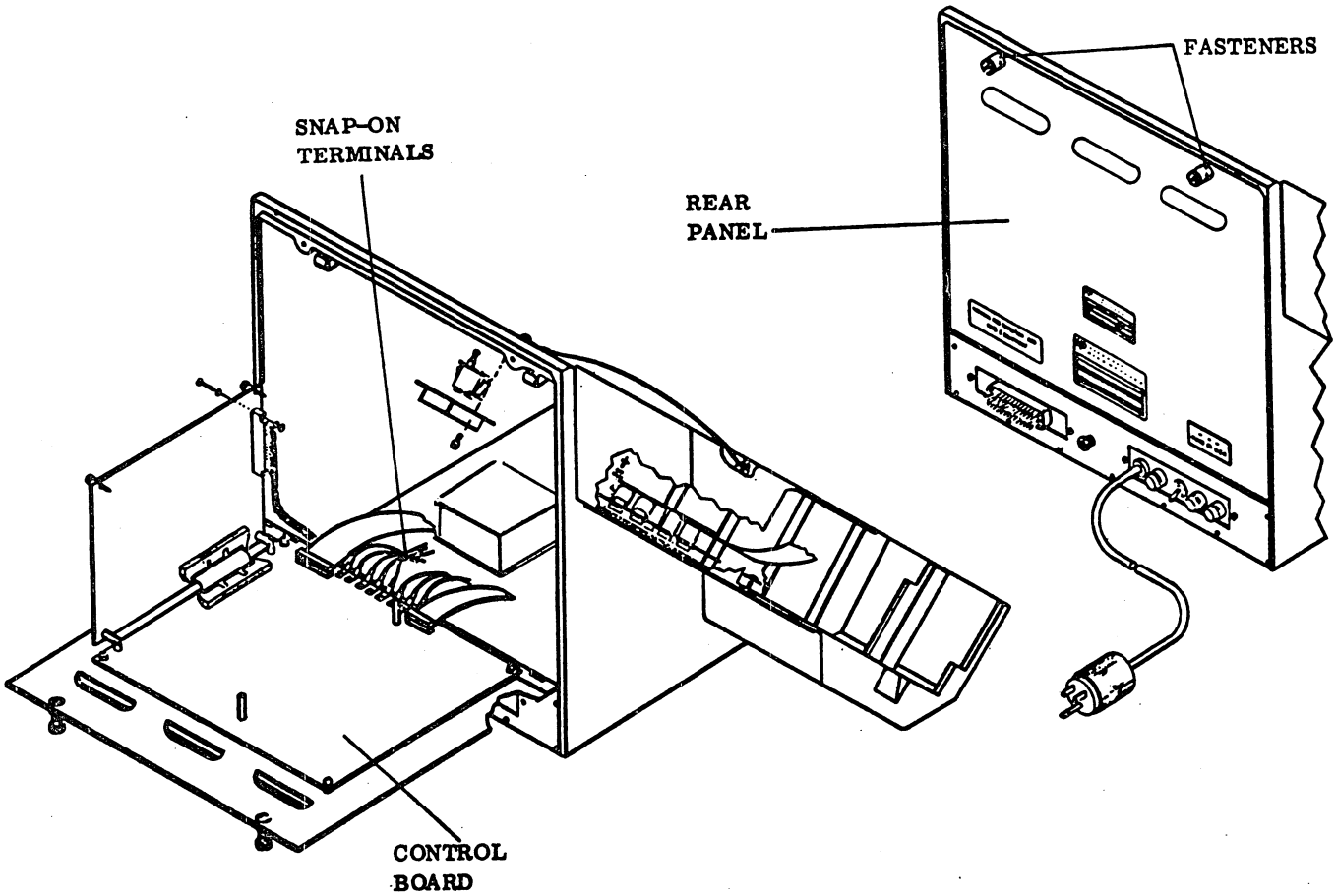

Figure 6D-6. +5 V dc and +17 V dc Test Points

hopper empty switch is released, the hopper empty switch is all right and the procedure is complete. If this does not occur, go to step 2 and perform fault isolation of the hopper empty switch.

2. Perform fault isolation of the hopper empty switch:

   a. Remove the front cover from the deck assembly by removing the screws on the left hand side of the cover and pushing the cover sideways to the right (figure 6D-6).

   b. Disconnect the switch leads at the quick disconnect receptacle on the hopper empty switch (figure 6D-7).

   c. Press the RESET indicator/switch. Check that the RESET indicator illuminates and the motor turns for 14 ±5 seconds. If the motor drops immediately and the HOPPER light illuminates, there is no problem with the switch.

   d. If step 2c fails, replace the hopper empty switch according to procedure D26.

   e. If the fault is not with the hopper empty switch, connect the switch leads to the quick disconnect receptacle on the hopper empty switch.

   f. Replace the front cover.

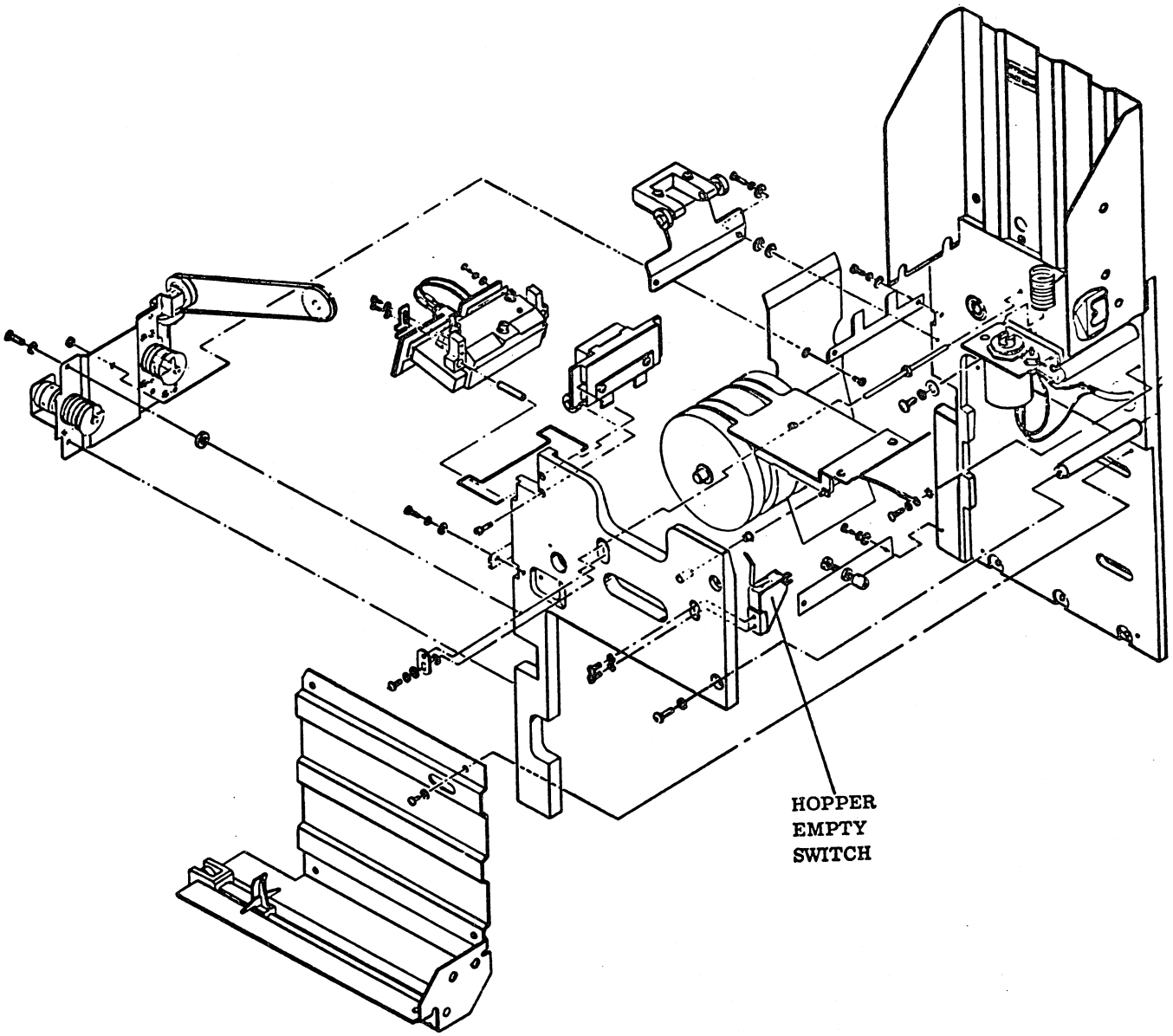

Figure 6D-7. Hopper Empty Switch

D8 STACKER FULL SWITCH CHECK

To check the stacker full switch of the card reader (figure 6D-8), perform the following:

1. Place the switches on the control and data boards for on-line operation (refer to figure 4D-7 and tables 4D-2 and 4D-3 in volume 1).

   a. Press and hold the hopper empty switch in the lower right corner of the hopper.

   b. Press the RESET indicator/switch. The RESET indicator illuminates and the motor power comes up.

   c. Press the stacker full switch in the upper right corner of stacker before the RESET indicator extinguishes and motor power drops. If the RESET indicator extinguishes and the motor power drops before the stacker full switch is pressed, press the RESET indicator/switch again.

      Check that the RESET indicator extinguishes and that motor power drops immediately when the stacker full switch is pressed. Check that the STACK indicator illuminates. If the RESET indicator extinguishes and motor power drops, the stacker full switch is all right. If this does not occur, go to step 2 and perform fault isolation of the stacker full switch.

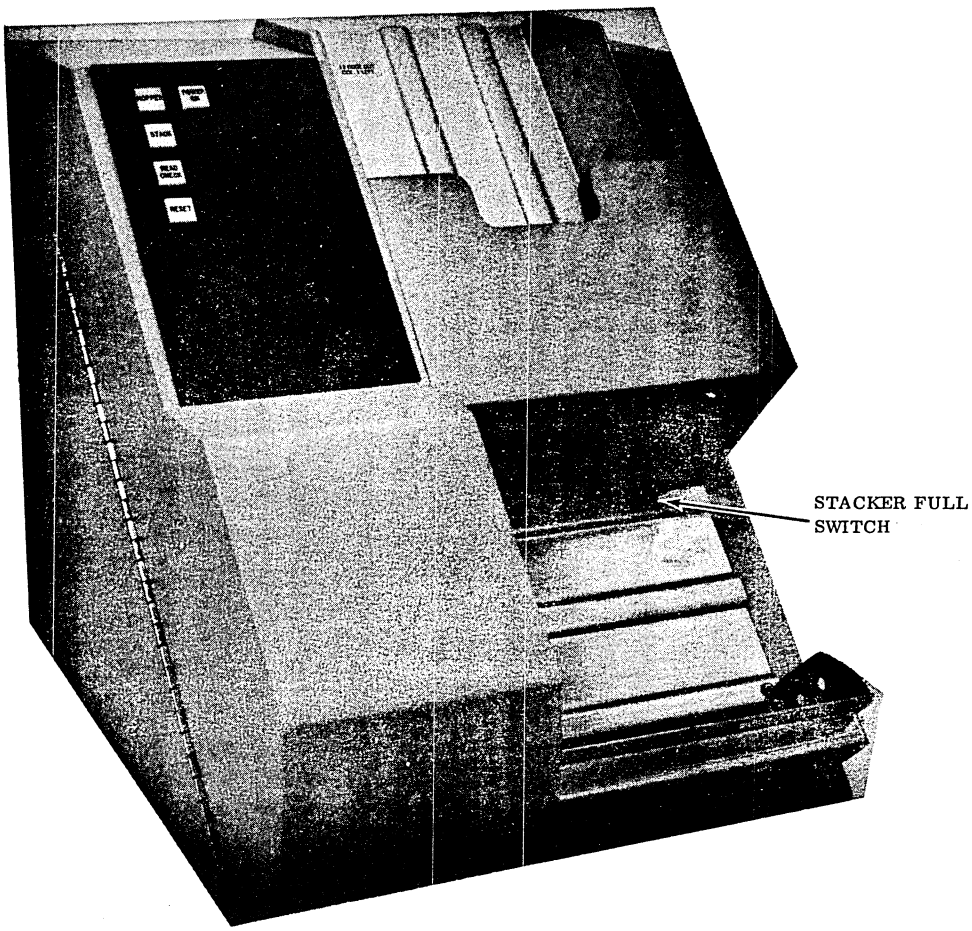

Figure 6D-8. Stacker Full Switch

2. Perform fault isolation of the stacker-full switch:

   a. Grasp the indicator/switch control panel housing, and swing the control panel up and to the left of the card reader.

   b. Rotate the slotted screw at the back of the card input hopper counterclockwsie until the deck assembly releases.

   c. Grasp the front edge of the card hopper, and pull it forward to raise the hopper/stacker assembly to a vertical position. Lock the assembly in the vertical position by pushing down on and engaging the slot in the slider bar at the bottom right of the assembly.

   d. With needlenose pliers, pull up the bottom on the interlock switch on the upper left hand corner of the card reader to bypass the interlock (figure 6D-9).

   e. Disconnect the leads at the quick release receptacle of the switch (figure 6D-10).

   f. Connect one end of a jumper wire to one connector lead contact of the stacker full switch.

   g. Place the cards in the card hopper.

   h. Press the RESET indicator/switch.

   i. Connect the free end of the jumper wire to the other wire contact connector. Check that the RESET indicator extinguishes and motor power drops immediately when the jumper connects to the other contact in the connector. If this occurs, replace the stacker full switch. If this does not occur, replace the control card according to procedure D13.

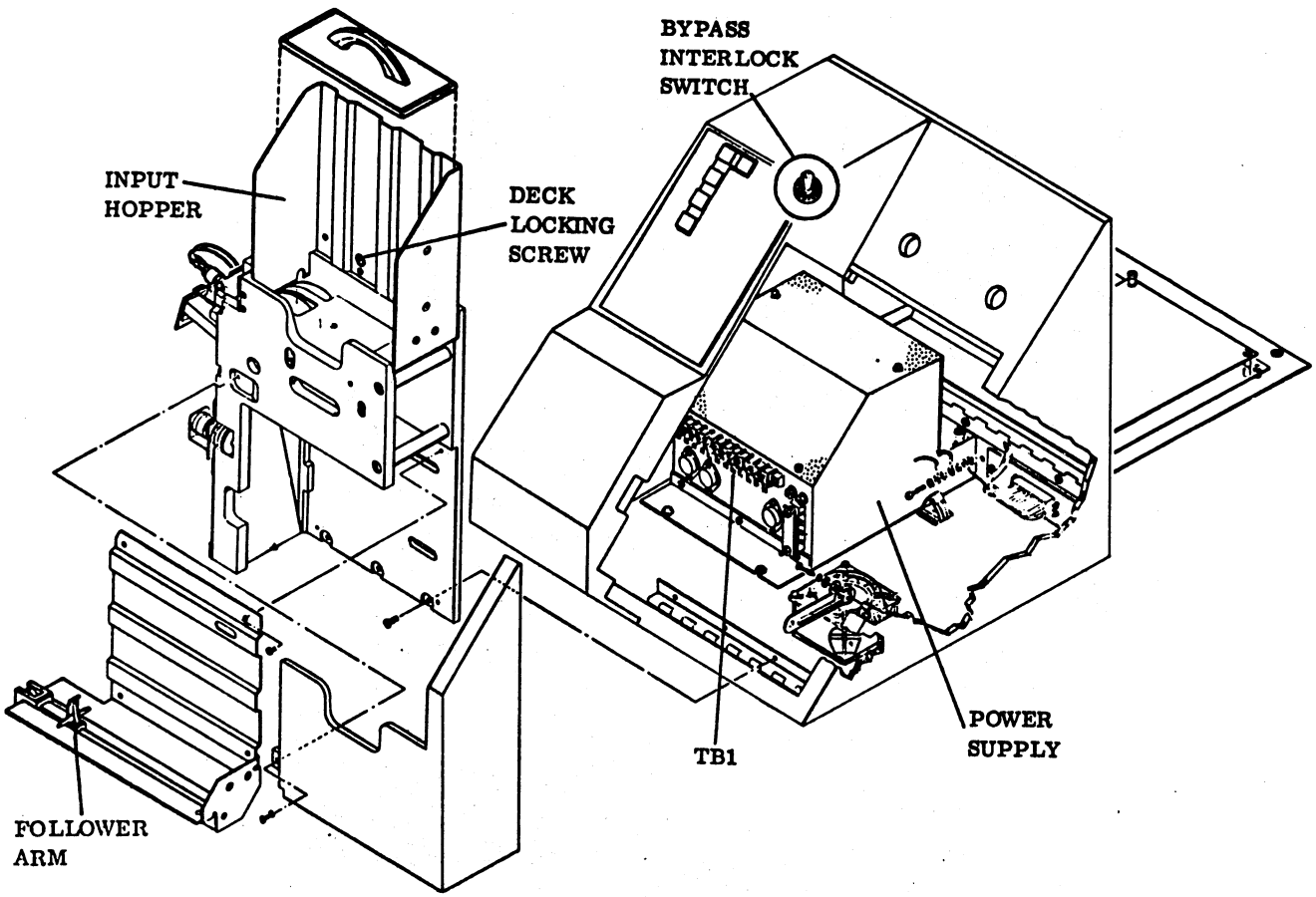

Figure 6D-9. Bypass Interlock Switch

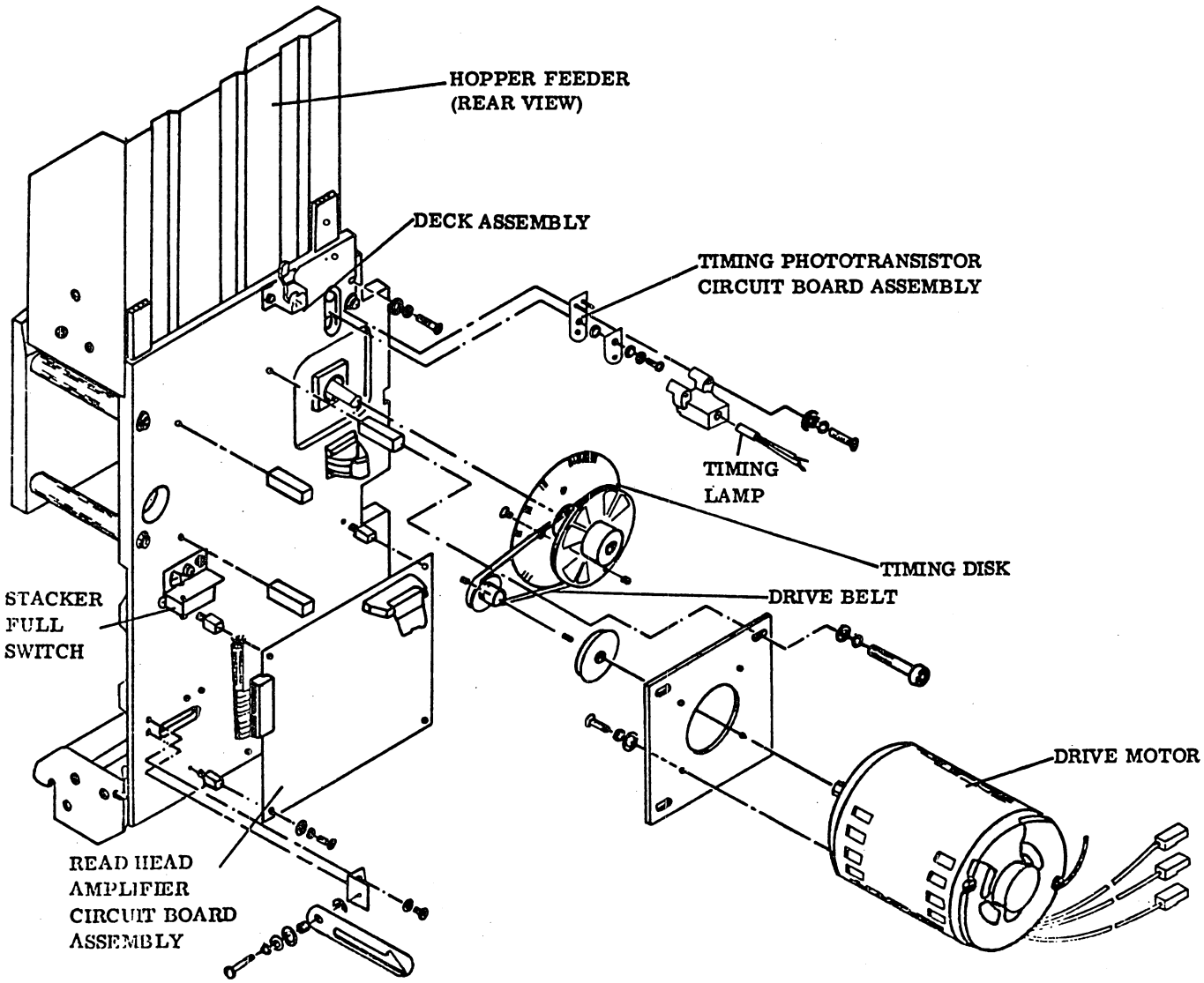

Figure 6D-10. Stacker Full Switch

D9 CONTROL PANEL INDICATOR AND/OR SWITCH CHECK

To check an indicator and/or switch on the card reader control panel, perform the following:

1. Turn off the power according to procedure D2.
2. Rotate the screws at the upper edge of the rear panel counterclockwise, and swing down the rear panel.
3. Disconnect the cable from the connector at P2 (figure 6D-11) of the control board (the control board is the larger of two boards mounted on the rear panel).

NOTE

This type of connector is easily removed by inserting a small common-tip screwdriver in the slot at the midpoint of the connector and then rotating the screwdriver in either direction to pop up the connector.

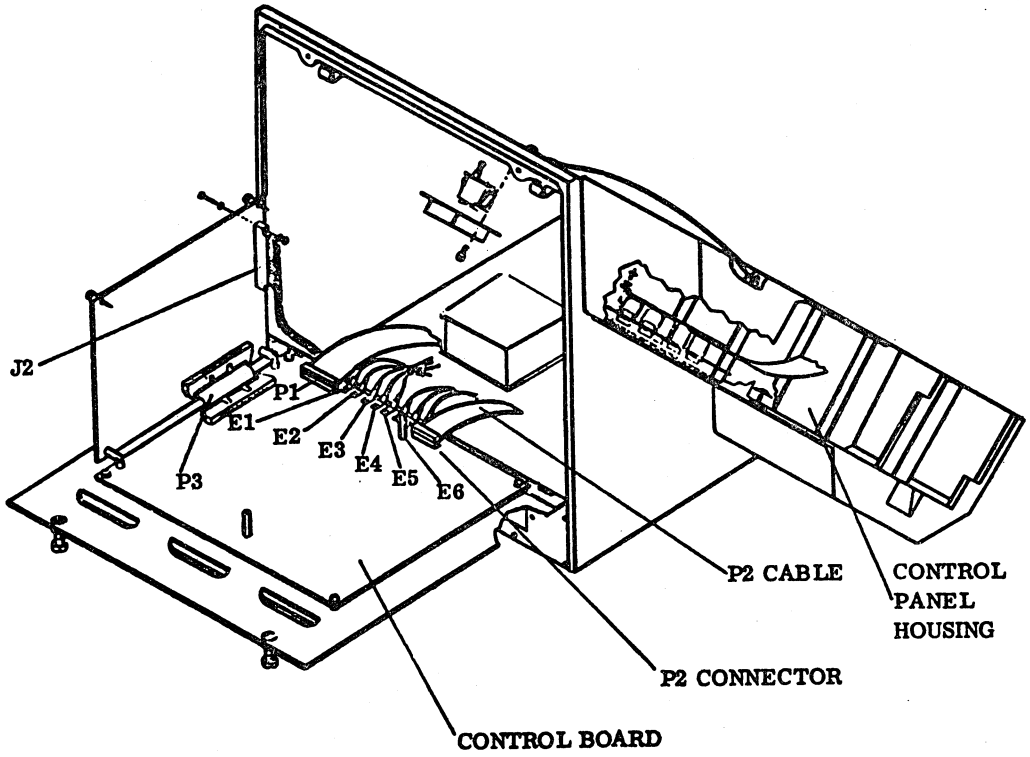

Figure 6D-11. Switch Board and Cable

4. Grasp the indicator/switch control panel housing, and swing the control panel up and to the left of the card reader.

5. Check the indicators by performing step 6. Check the switches by performing step 7.

6. Check each indicator by connecting the ohmmeter to the indicator contacts on the switch board. Check that the ohmmeter shows continuity. If the ohmmeter does not show continuity, replace the indicator according to procedure D10.

7. Check each switch:

   a. Identify the indicator contacts of the switch by connecting the ohmmeter to the switch contacts on the switch board and checking for continuity.

   b. Connect the ohmmeter to the remaining set of switch contacts on the switch board, and press the switch. Check that the ohmmeter shows continuity. If the ohmmeter does not show continuity, replace the switch according to procedure D10.

8. Replace the cable at P2, and close the rear panel.

D10 SWITCH BOARD AND CABLE REPLACEMENT

To replace the switch board and its associated cable, perform the following:

1. Remove power from the card reader:

   a. Place rear panel toggle switch S1 down.

   b. Disconnect the card reader ac power cord form the site power outlet.

2. Rotate the screws at the upper edge of the rear panel counterclockwise, and swing down the rear panel.

3. Disconnect the cable from the connector at P2 (figure 6D-11) on the control board (the control board is the larger of two boards mounted on the rear panel). Remove the cable from any cable clamps.

NOTE

This type of connector is easily removed by inserting a small common-tip screwdriver in the slot at the midpoint of the connector and then rotating the screwdriver in either direction to pop up the connector.

4. Grasp the indicator/switch control panel housing, and swing the control panel up and to the left of the card reader.

5. Remove the three screws that hold the switch board to the back side of the control panel. Remove the switch board and its associated cable from the card reader.

6. Install the switch board on the back side of the control panel using three screws.

7. Connect the switch board cable to the connector at P2 on the control board. Replace the cable in any cable clamps if used.

8. Close the rear panel.

9. Close the indicator/switch control panel.

10. Apply power to the card reader:

    a. Connect the card reader ac power cord to the power distribution box in the equipment cabinet.

    b. Place rear panel toggle switch S1 up.

D11 AMPLIFIER BOARD REPLACEMENT AND TIMING/READ LAMP ADJUSTMENT

1. Remove power from the card reader:

    a. Place rear panel toggle switch S1 down.

    b. Disconnect the card reader ac power cord from the power distribution box.

2. Grasp the indicator/switch control panel housing, and swing the control panel up and to the left of the card reader.

3. Rotate the deck housing screw at the back of the card hopper counterclockwise until the deck assembly is released (figure 6D-12).

4. Grasp the front edge of the card hopper and pull forward to raise the hopper/stacker assembly to vertical position. Lock the assembly in the vertical position by pushing down on the slider bar at the bottom right of the assembly to engage the slot in the bar (figure 6D-13).

5. Disconnect the three cables from the edge of the amplifier board directly beneath the single card feed motor.

NOTE

This type of connector is easily removed by inserting a small common-tip screwdriver in the slot at the midpoint of the connector and then rotating the screwdriver in either direction to pop up the connector.

6. Remove the four screws at the corners of the amplifier board, and remove the board from the card reader.

7. Check that the amplifier board standoffs on the card reader are secure.

8. Install a new amplifier board using four mounting screws. Position the board so that two potentiometers are in the lower left corner of the board.

9. Connect the three cables to the amplifier board.

The following steps are used for adjustment:

10. Prepare the card reader for off-line operation according to procedure D4.

11. With the multimeter set to read greater than 4 V dc, connect the test leads under the sleeving of the read head lamp (ensure proper polarity of the meter). See figures 6D-14, 6D-15, and 6D-16.

12. Apply power to the card reader. With needlenose pliers, lift the interlock button on the bottom left side of the card reader (front) to bypass the interlock (figure 6D-15).

13. With power applied, adjust potentiometer R10 on the amplifier card for a reading of 3 V dc (figure 6D-13).

14. Remove the leads from the read lamp assembly.

15. Trace the wires from the timing lamp to the amplifier board connector, and insert the meter test leads in the slots.

16. Turn potentiometer R9 to each extreme, and record the voltage (see figure 6D-13).

17. Add the two voltages together and divide by 2; then adjust potentiometer R9 to that reading.

18. Load the input hopper with any buff-colored deck, and press the RESET button to begin card processing.

19. Again adjust potentiometer R9 to the highest voltage before the card reader indicator exhibits READ CHECK, and record the high voltage. Repeat this procedure again; except decrease the voltage until the card reader indicator exhibits READ CHECK or the end of the potentiometer is reached, and then record the information.

20. Add the voltages and divide by 2 to obtain the optimum voltage; then adjust potentiometer R9 to that reading.

21. Remove the test leads and place them under the sleeving of the read lamp leads (ensure proper polarity).

22. Load the input hopper with a buff-colored checkerboard deck, and press the RESET button to process the cards.

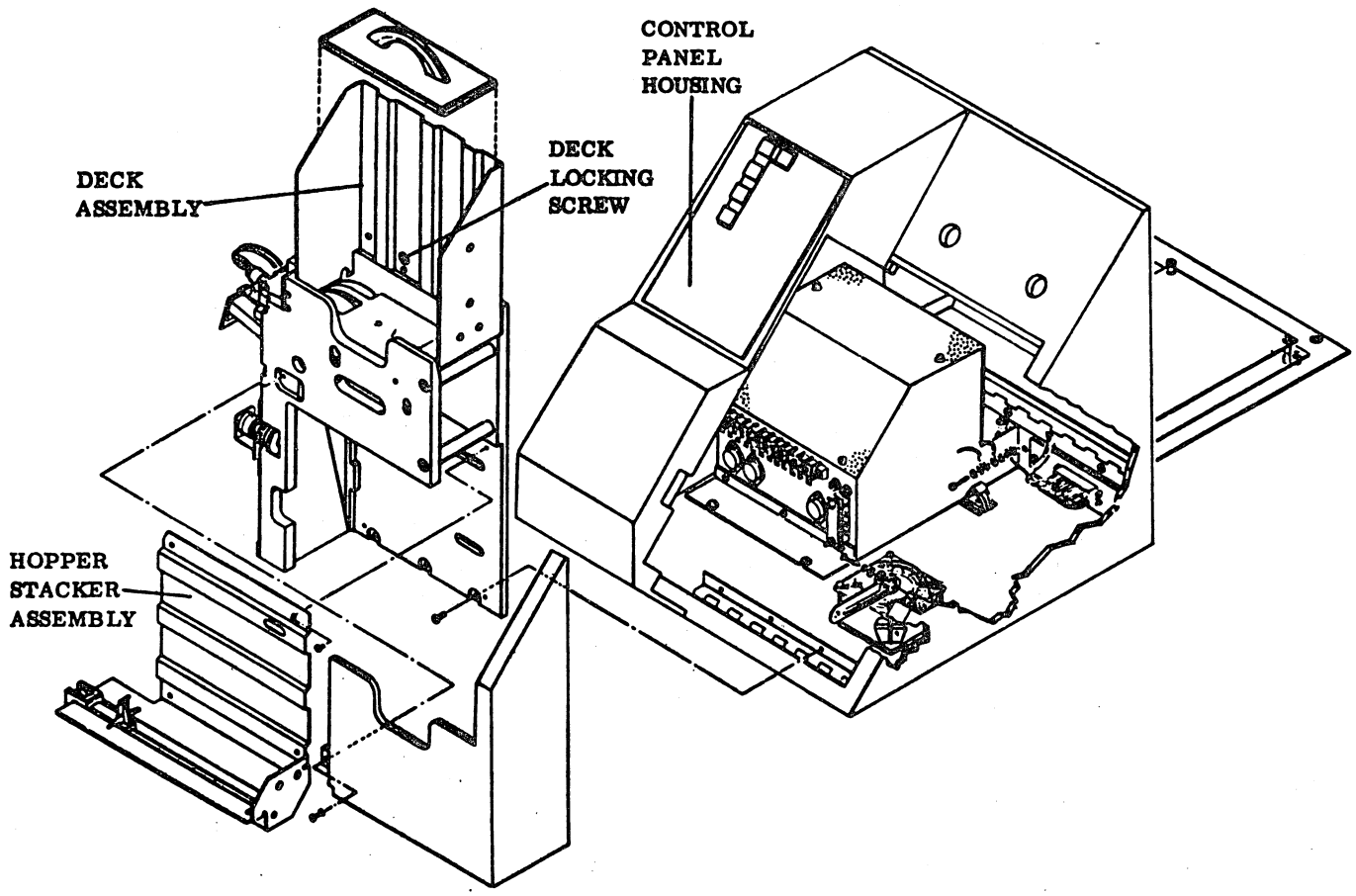

Figure 6D-12. Deck Locking Screw

23. Adjust potentiometer R10 on the amplifier card for the highest voltage reading or until the READ CHECK indicator is illuminated. Record the high reading (see figure 6D-13).

24. Remove the buff cards and load the hopper with blue cards; then press the RESET button to process.

25. Adjust potentiometer R10 for the lowest reading or until the READ CHECK indicator is illuminated; then record the reading.

26. Add the high reading and the low reading, and divide by 2 to obtain the optimum voltage. Adjust potentiometer R10 to that voltage.

27. Remove the meter and place the control and data board switches to run diagnostics (procedure D3).

28. Lock down the data board and close the back panel; lower the deck assembly and secure. Close the front control panel door.

29. Go to procedure D31.

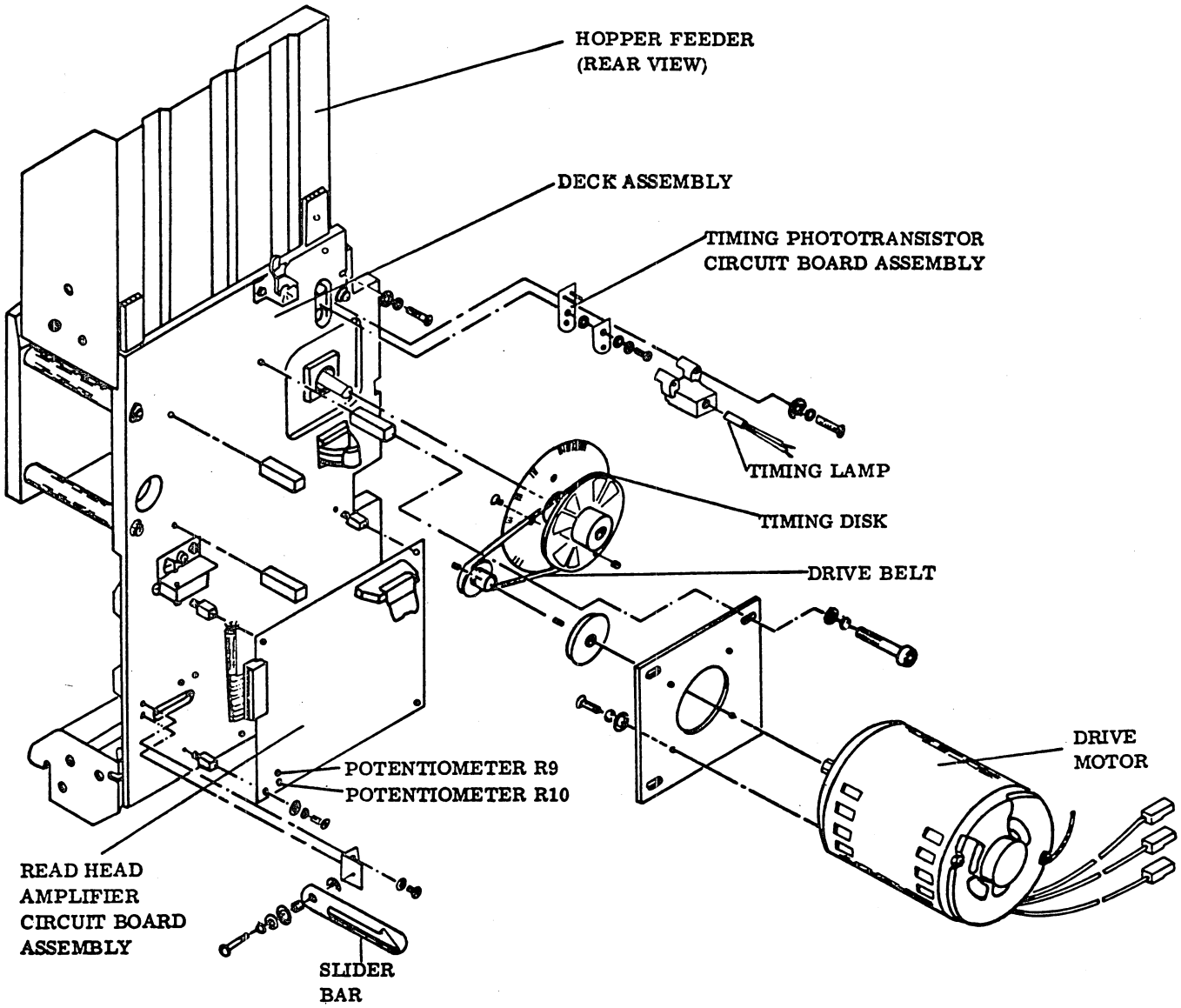

Figure 6D-13. Deck Assembly

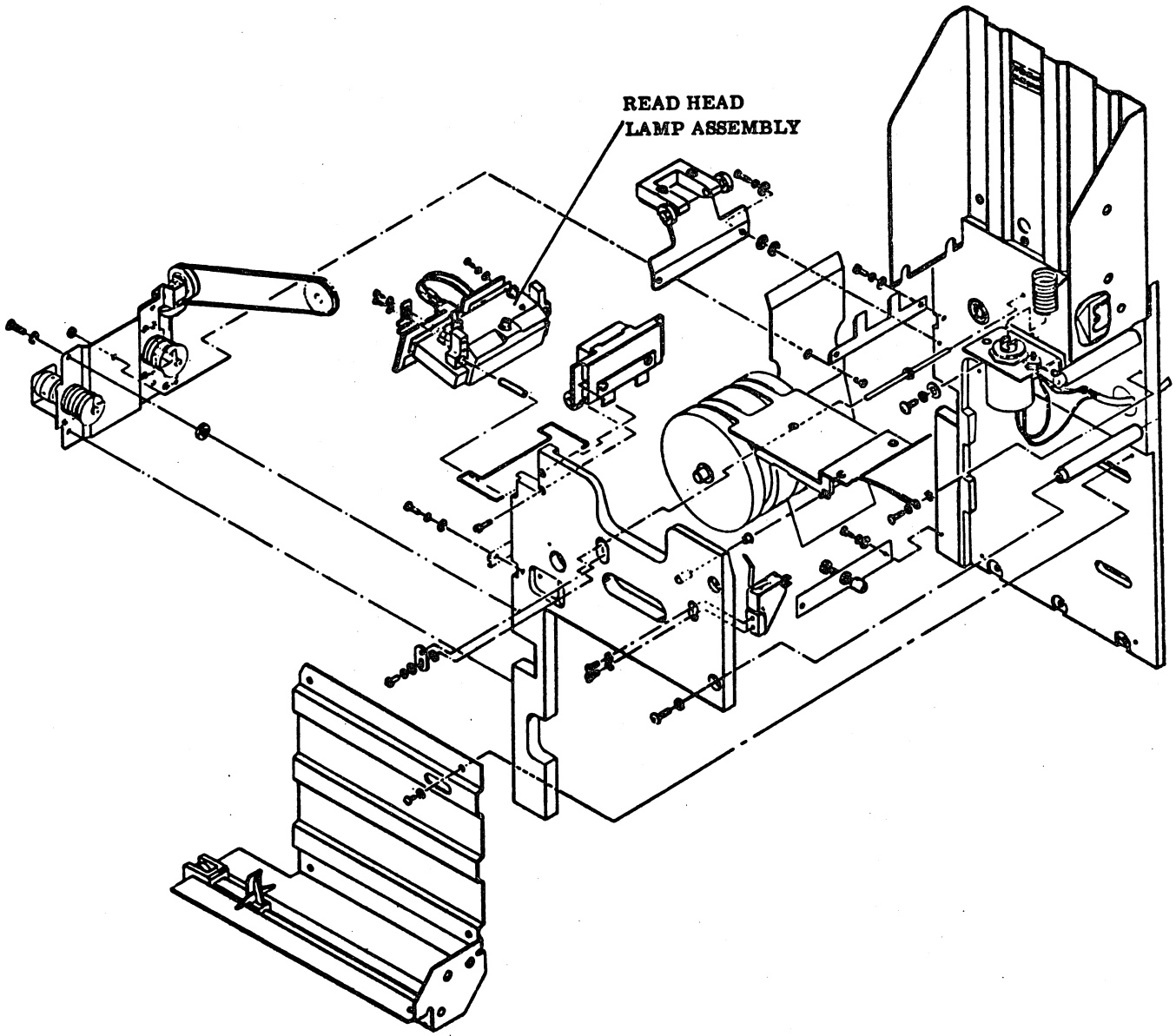

Figure 6D-14. Read Head Lamp Test Points

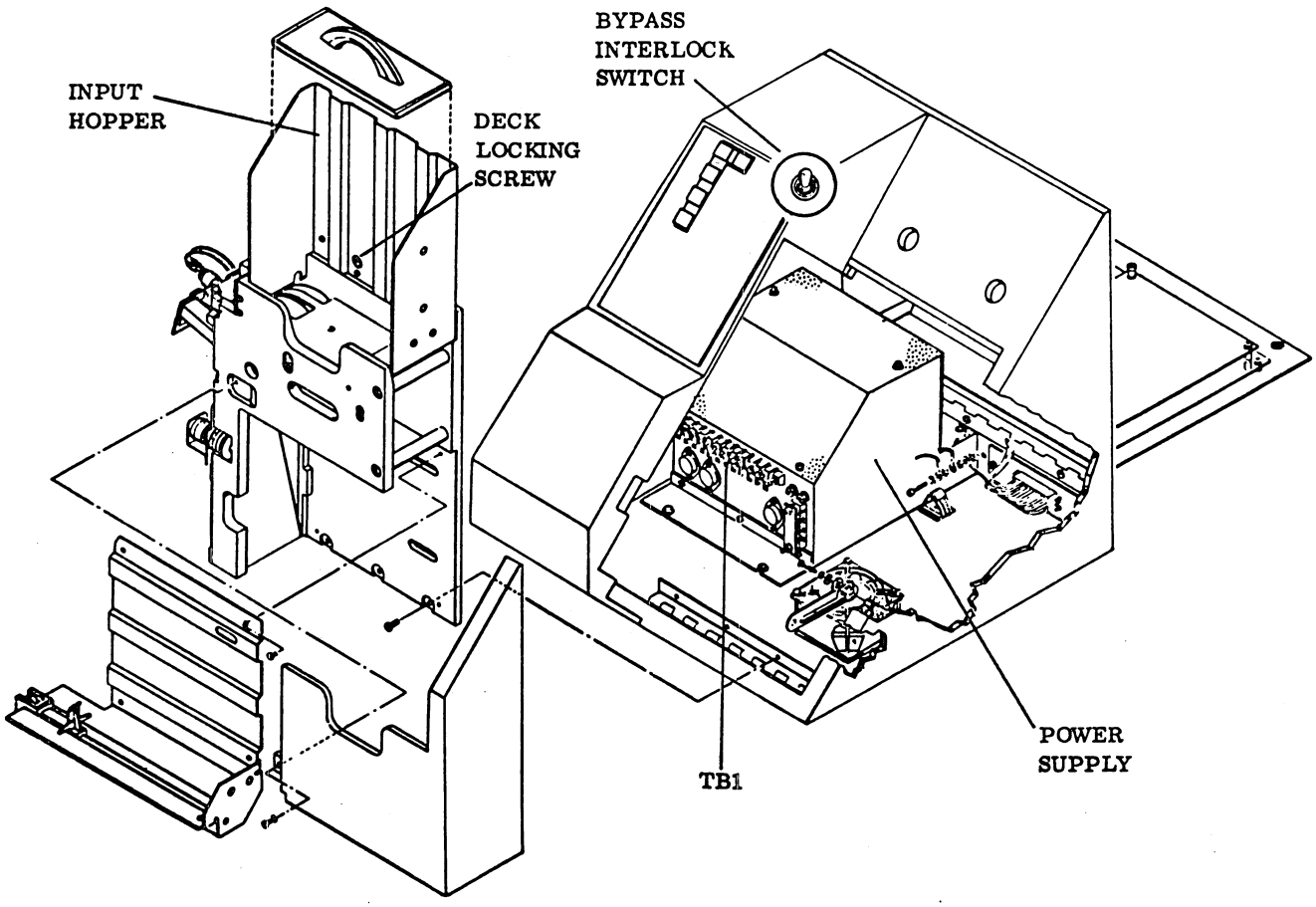

Figure 6D-15. Interlock Switch Location

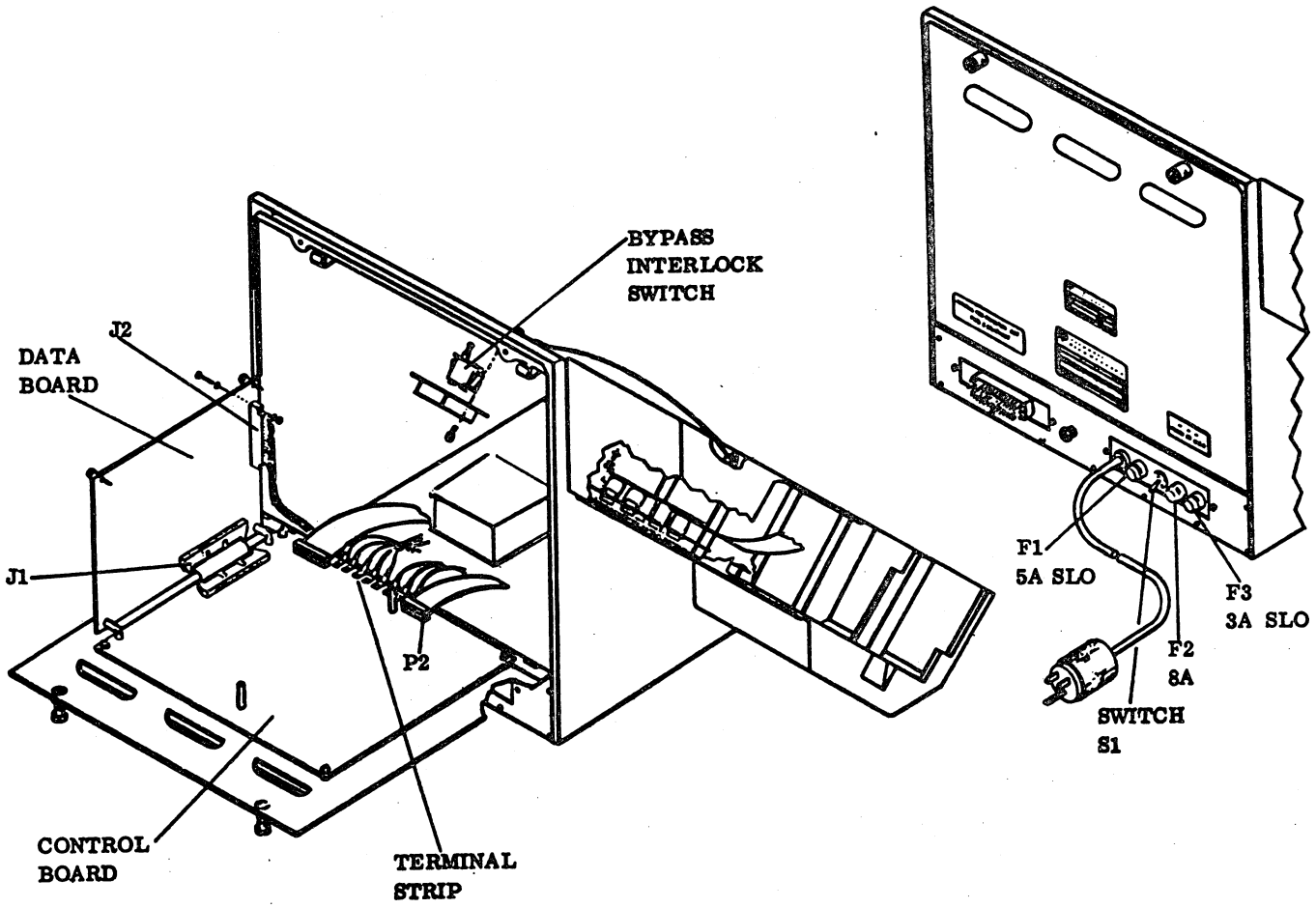

Figure 6D-16. Data Board Connections

D12 DATA BOARD REPLACEMENT

To replace the data board of the card reader, perform the following:

1. Turn off the power according to procedure D2.
2. Disconnect the card reader ac power cord from the site power outlet.
3. Rotate the screws at the upper edge of the rear panel counterclockwise, and swing down the rear panel.
4. Loosen the two screws at the right edge of the data board (the smaller of the two boards mounted on the rear panel), and swing the data board up (see figure 6D-16).
5. Remove connector J2 (figure 6D-16).
6. Remove the two screws at the left edge of the data board that fasten the data board to the control board.
7. Disconnect interconnecting cable J1 (between the data and control boards) from the data board. Remove the data board from the card reader (see figure 6D-16).

NOTE

This type of connector is easily removed by inserting a small common-tip screwdriver in the slot at the midpoint of the connector and then rotating the screwdriver in either direction to pop up the connector.

8. Place the new data board over the control board, and connect the interconnecting cable between the data and control boards to the data board.
9. Install the two screws at the left edge of the data board that fasten the data board to the control board. Attach the cable tie with the top screw.

10. Connect the cable to the connector on the data board at the edge nearest the card reader.

11. Set the switches at the center of the data board to the normal positions shown in figure 4D-7 in volume 1 (see table 4D-2).

12. Verify that the settings of the switches at the lower edge of the control board correspond to those shown in table 4D-3).

13. Lower the data board and secure the two screws at the right edge of the board.

14. Check the seating of the interconnecting cable between the data and control boards by pressing firmly against the connectors at the left edge of the boards using a blunt tool, such as the eraser end of a pencil or the large blade of a common-tip screwdriver.

15. Connect the card reader ac power cord to the site power outlet.

16. Turn on the power according to procedure D1.

17. Close the rear panel.

D13 CONTROL BOARD REPLACEMENT

To replace the control board of the card reader (figure 6D-17), perform the following:

1. Turn off the power according to procedure D2.

2. Disconnect the card reader ac power cord from the site power outlet.

3. Rotate the screws at the upper edge of the rear panel counterclockwise, and swing down the rear panel.

4. Disconnect the cable from the connector at P2 on the control board; the control board is the larger of the two boards mounted on the rear panel.

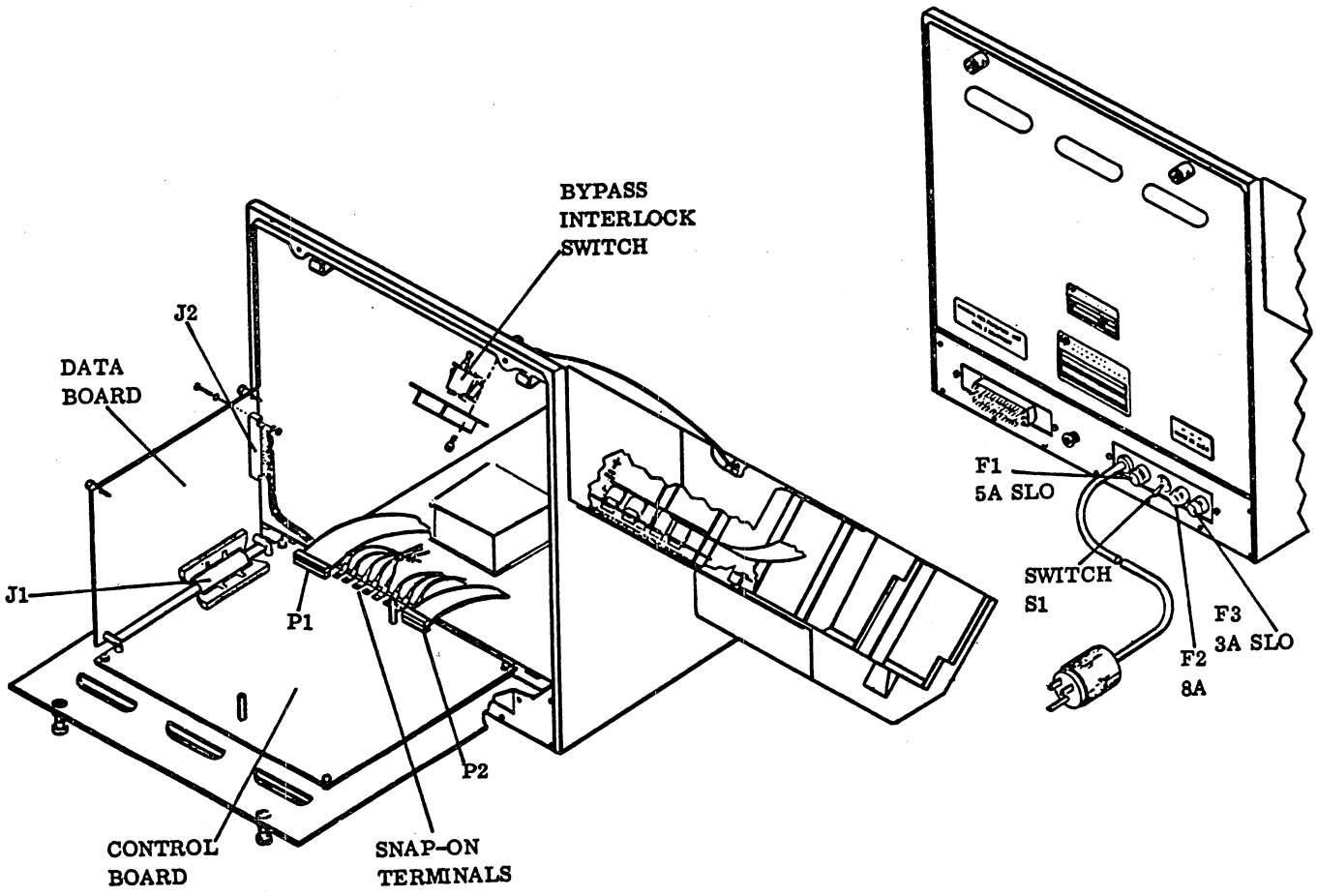

Figure 6D-17. Control Board Location

NOTE

This type of connector is easily removed by inserting a small common-tip screwdriver in the slot at the midpoint of the connector and then rotating the screwdriver in either direction to pop up the connector.

5. Disconnect all wires from the terminal strip at the top center edge of the control board. Tag the wires for correct reconnection later.

6. Remove the screws at the four corners of the control board.

7. Remove the data board from the control board:

   a. Stand the control board on its left edge and remove the four screws from the bottom side that attach the data board to the control board.

   b. Lay the control board down and swing the data board up to a vertical position. Disconnect the interconnecting cable between the data control boards from the control board.

   c. Swing the data board and its cabling to the left side of the card reader.

8. Disconnect the cable from the connector at P1 on the control board. Remove the control board from the card reader.

9. Place a new control board on the rear panel of the card reader. Position the board so that the terminal strip is at the top edge of the board and the component side of the board faces up.

10. Connect the cable to the connector at P1 on the control board.

11. Attach the data board to the control board:

   a. Pick up the data board and connect the interconnecting cable between the data and control boards to the control board.

   b. Position the data board and its standoffs over the mounting holes on the control board.

   c. Swing the data and control boards up and stand them on their left edges. Install two data board mounting screws at the center of the control board.

   d. Install two data board mounting screws at the edge of the control board. Use your fingers to position the hinged standoffs of the data board over the holes in the control board.

12. Lower both boards into position over the control board mounting holes on the card reader rear panel. Install four control board mounting screws.

13. Reconnect the wires to the terminal strip at the top center edge of the control board.

14. Connect the cable to connector P2.

15. Loosen the two screws at the right edge of the data board and swing the data board up to a vertical position.

16. Verify that the settings of the switches at the center of the data board correspond to those shown in table 4D-2 (see figure 4D-7).

17. Set the switches at the lower edge of the control board to the settings shown in table 4D-3 in volume 1.

18. Lower the data board and secure the two screws at the right edge of the board.

19. Check the seating of the interconnecting cable between the data and control boards by pressing firmly against the connectors at the left edge of the boards using a blunt tool, such as the eraser end of a pencil or the large blade of a common-tip screwdriver.

20. Connect the card reader ac power cord to the site power outlet.

21. Turn on the power according to procedure D1.

22. Close the rear panel.

D14 READ HEAD ASSEMBLY REPLACEMENT

To replace the read head, perform the following (see figure 6D-18):

1. Remove power from the card reader:

   a. Place rear panel toggle switch S1 down.

   b. Disconnect the card reader ac power cord from the site power outlet.

2. Grasp the indicator/switch control panel housing and swing it up and to the left of the card reader.

3. Rotate the deck housing screw at the back of the card hopper counterclockwise until the deck assembly releases (see figure 6D-19).

4. Grasp the front edge of the card hopper and pull forward to raise the hopper/stacker assembly to a vertical position. Lock the assembly in the vertical position by pushing down and engaging the slot in the slider bar at the bottom right of the assembly.

5. Disconnect the read head cable from the top connector of the amplifier board (figure 6D-20). Remove the cable from the cable clamp.

NOTE

This type of connector is easily removed by inserting a small common-tip screwdriver in the slot at the midpoint of the connector and then rotating the screwdriver in either direction to pop up the connector.

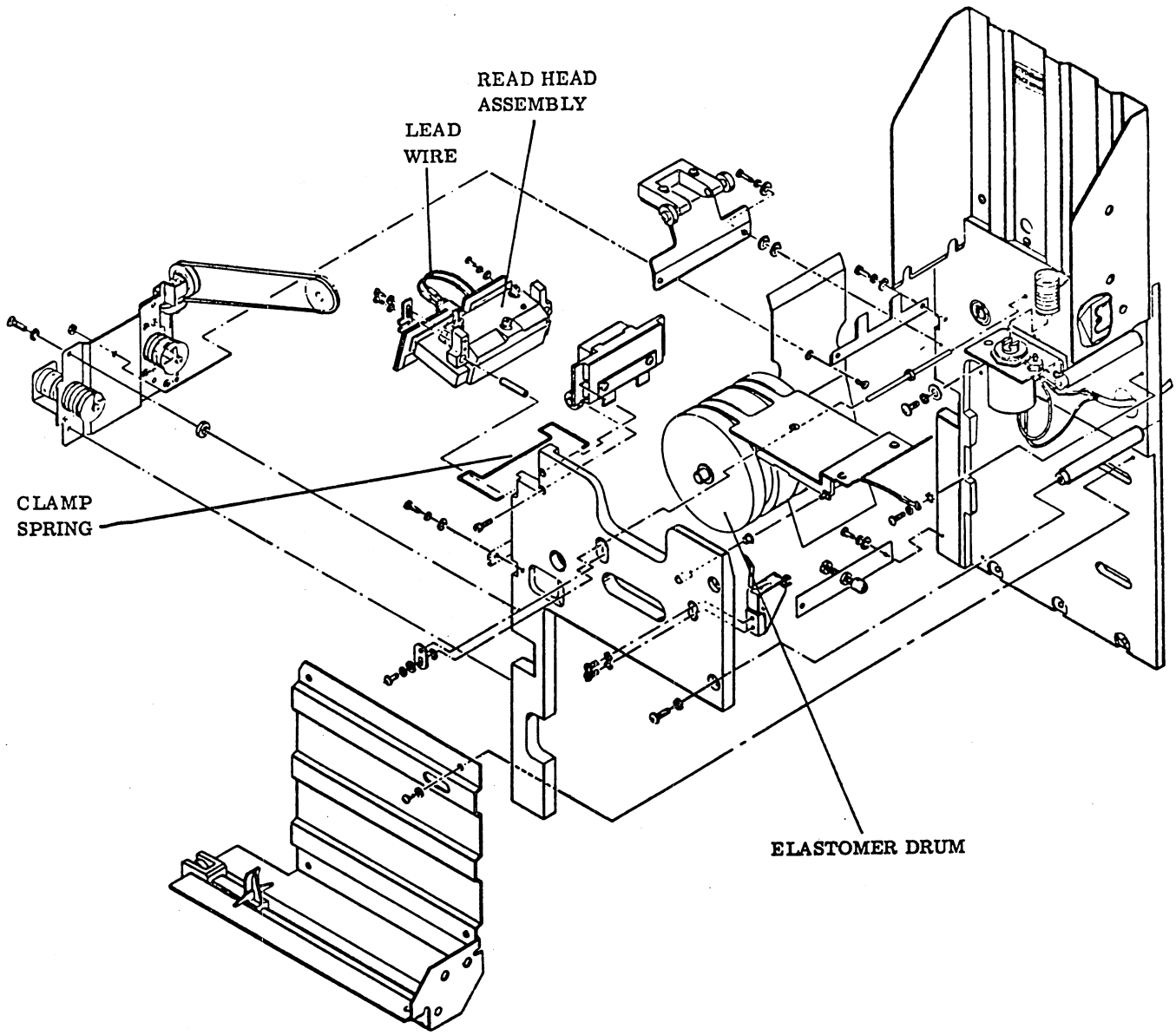

Figure 6D-18. Mechanical Deck Assembly Identifying the Read Head Assembly

6. Remove the two lead wires to the read head lamp (i.e., bayonet-type connector).

7. Remove one ground strap from the read head assembly (i.e., remove one 6-32 screw, clip the ground lug free, and replace the screw).

8. Remove the three 6-32 screws that fasten the read head assembly to the support assembly.

9. Remove the clamp spring that locks the read head assembly in place by pulling back and up on the clamp (figure 6D-18).

10. Remove the read head assembly.

11. To install a new read head assembly, the clearance between the face of the head and the drum surface should be set from 012 to 016 inch. (0.305mm to 0.306mm).

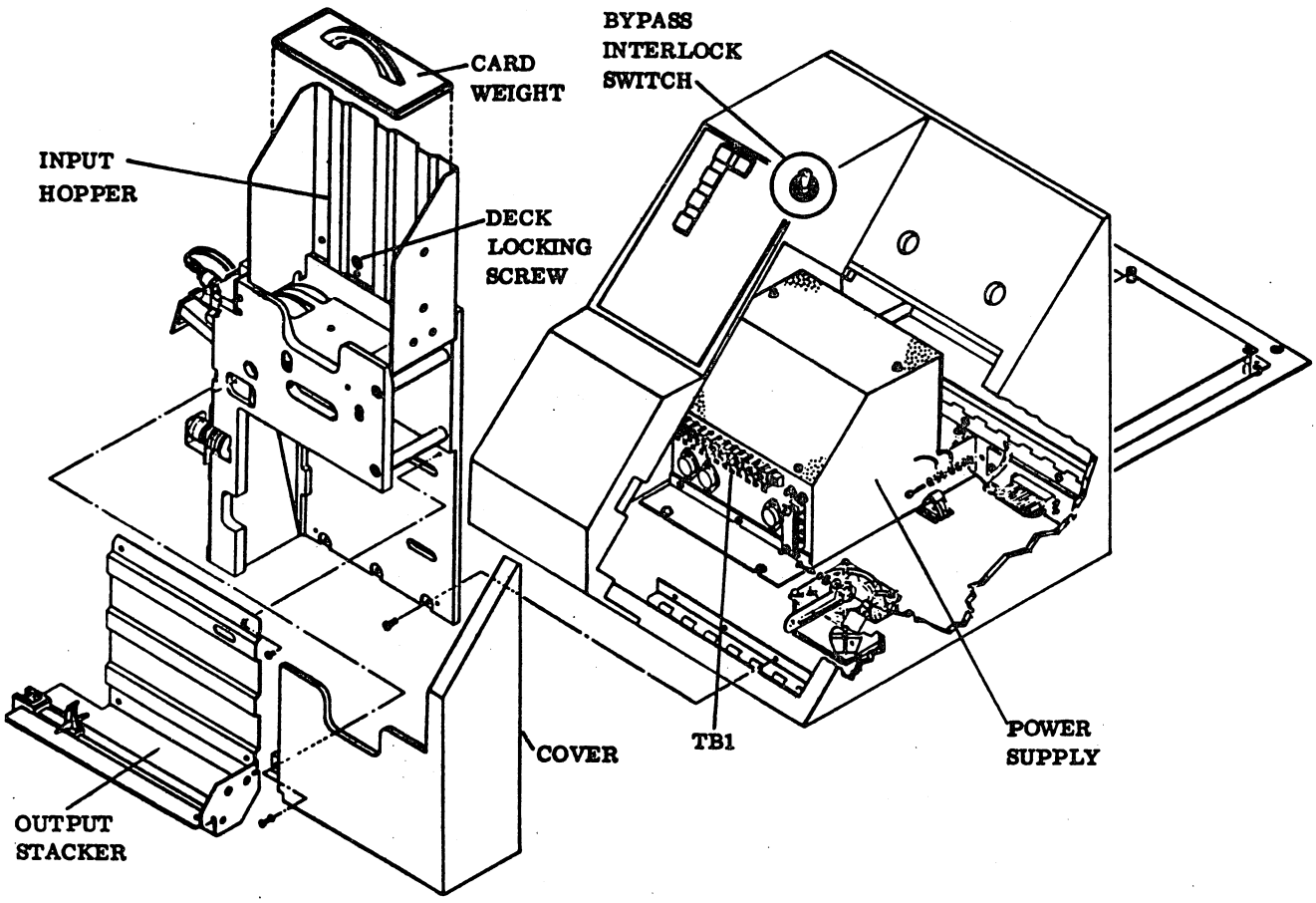

Figure 6D-19. Hopper/Stacker Assembly

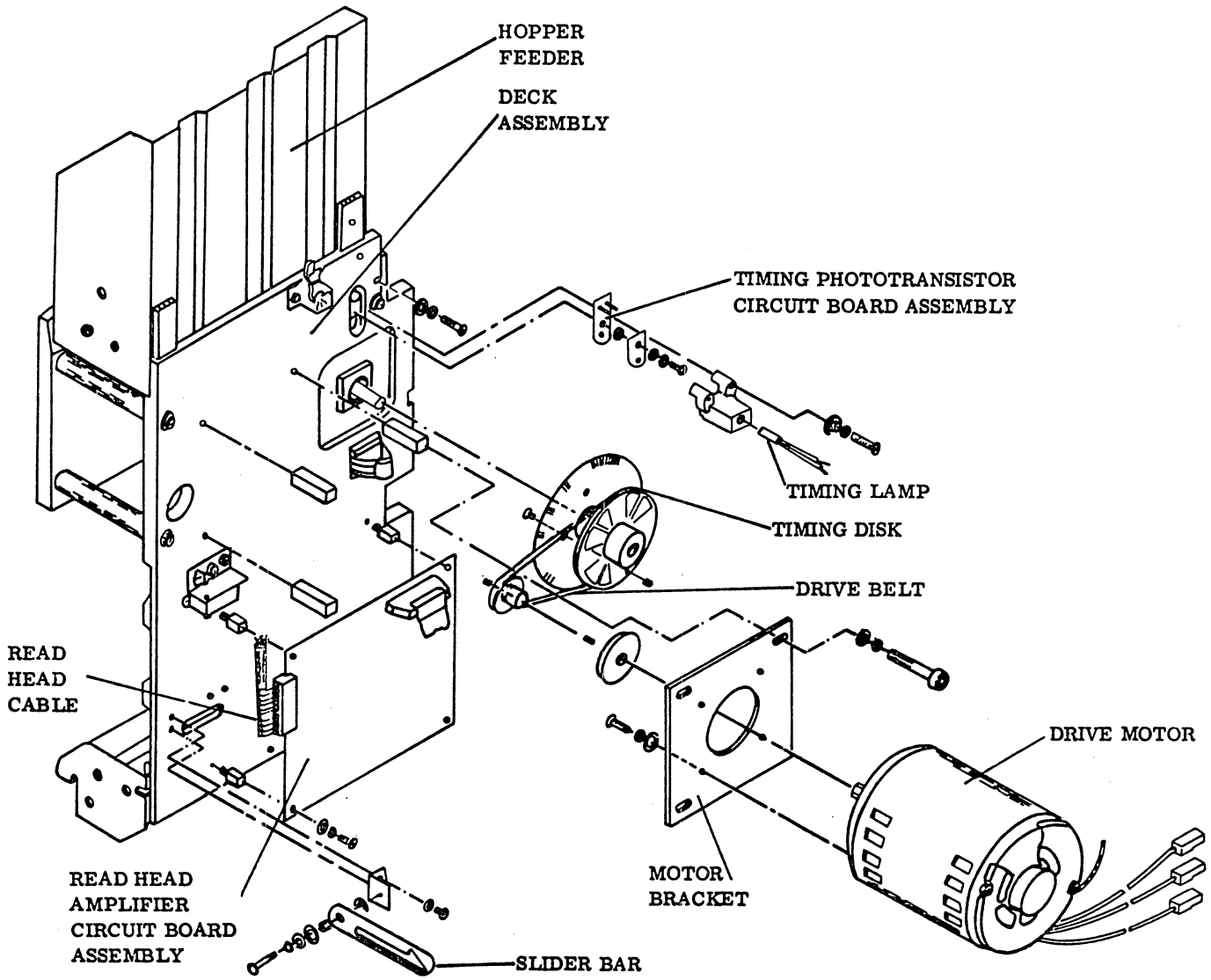

Figure 6D-20. Amplifier Board and Drive Motor Assemblies

NOTE

Two tabulating cards may be used in setting the clearance.

12. Place the read head assembly beneath the read head support and insert it; loosely tighten the three holding screws.

13. Insert the two tab cards between the face of the read head and the surface of the transport drum. Pass the cards through the feed throat by rotating the elastomer drum and forcing the cards through the throat.

14. Press the head assembly forward until it is snug against the card and tighten the three 6-32 screws.

15. Draw the cards through the read head above the stacker motors.

16. Connect the ground leads to a 6-32 screws on the read head assembly above the stacker drive assembly.

17. Reconnect the bayonet lamp leads.

18. Connect the cable ribbon from the read head to the amplifier board.

19. Apply power to the card reader and perform skew adjustments according to procedure D18.

20. Go to procedure D31.

D15 DRIVE MOTOR REPLACEMENT

To replace the drive motor of the card reader (figure 6D-20), perform the following:

1. Remove power from the card reader:

   a. Place rear panel toggle switch S1 down.

   b. Disconnect the card reader ac power cord from the site power outlet.

2. Grasp the indicator/switch control panel housing, and swing it up and to the left of the card reader.

3. Rotate the slotted screw at the back of the card hopper counterclockwise until the deck assembly releases.

4. Grasp the front edge of the card hopper and pull it forward to raise the hopper/stacker assembly to a vertical position. Lock the assembly in the vertical position by pushing down on the slider bar at the bottom right of the assembly to engage the slot in the bar.

5. Remove the two 6-32 screws from the top of the motor bracket and disconnect the cable clamps. Re-insert the screws so they are not lost.

6. Unwrap the power cable to the power supply and disconnect the motor leads at terminals 1, 2, and 3 of TB2 in the power supply.

7. Remove the belts from the motor pulley.

8. Loosen the three 10-32 socket head screws located at the edge of the motor mounting plate.

9. Remove the upper right hand screw and one lower mounting screw.

10. Cradle the motor from beneath and remove the remaining mounting screw. Lift the motor assembly free of the cabinet. Retain the spacers on the motor mounting plate.

11. Place the motor assembly on a table and remove the pulley by loosening two number 6 hex-head set screws.

12. Remove the pulley from the motor shaft and replace it on the new motor assembly. Do not tighten the set screws until later.

13. Replace the motor assembly and loosely tighten the three 10-32 screws at the edge of the motor mounting plate.

14. Replace the timing belt and align the pulley on the end of the shaft so that the belt tracks properly.

15. Tighten the two number 6 hex-head set screws.

16. Apply tension to the motor assembly to take up any slack on the drive belt and tighten the three 10-32 screws.

17. Reroute the motor power cable and connect the wire to terminals 1, 2, and 3 of TB2 in the power supply.

18. Lift up the slider bar, and lower the hopper/stacker assembly to its normal operating position. Secure the assembly in place by rotating the slotted screw at the back of the card hopper clockwise.

19. Close the indicator/switch control panel.

20. Apply power to the card reader:

   a. Connect the card reader ac power cord to the site power outlet.

   b. Place rear panel toggle switch S1 up.

21. Press and hold the RESET indicator/switch. Check that the card feed drum turns.

D16 STACKER DRIVE ASSEMBLY REPLACEMENT

To remove the stacker drive belt, perform the following:

1. Loosen the three screws that contain the motor mounting plate via the standoffs on the rear plate. These screws should be loosened sufficiently to permit removal of the pulley belt that is between the pulleys and the rear plate, but still be tight enough to hold the motor mounting plate to the rear plate.

2. Slip the motor drive belt off of the motor shaft pulley.

3. Remove the stacker drive belt from the inner pulley of the motor shaft, and remove the belt from the motor shaft area.

4. Remove the outboard stacker spring mount, and remove the stacker drive belt from the pulley drive system.

To replace the stacker drive belt (figure 6D-21), perform the following:

5. Slip a new belt onto the inner pulley of the motor shaft.

6. Place the belt on the outboard stacker pulley and snug down the outboard pulley mount.

7. Rethread the belt.

8. Rotate the motor and observe for the correct pulley rotation.

9. Replace the drive belt on the motor shaft pulley.

10. Tighten down the outboard stacker mount screws and the motor plate screws while maintaining tension on the drive belt.

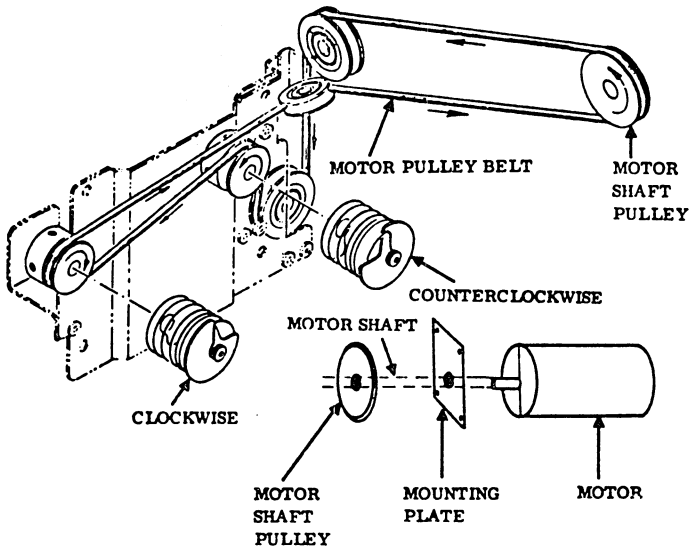

Figure 6D-21. Stacker Belt Drive

To remove the stacker spring/disk, perform the following:

11. Remove the pan head screw and washer that secure the spring and disk to the shaft; remove the disk. Use needlenose pliers to grasp the spring.

12. It may be necessary to apply heat (a clean-tipped soldering iron) to the head of the screw to dissipate any previously applied Loctite.

To repalce the stacker spring/disk, perform the following:

13. Place one drop of Loctite on the threaded end of the shaft.

14. Select the proper spring to conform with rotation; i.e., clockwise or counterclockwise (figure 6D-22).

15. Slide the large end loop of the spring over the shaft until it snaps in the shaft groove.

16. Insert a 6-32 x 1/4-inch pan head screw and washer through the spring wrap and hole in the disk. Drop the assembly over the shaft and tighten just enough to keep the assembly on the shaft.

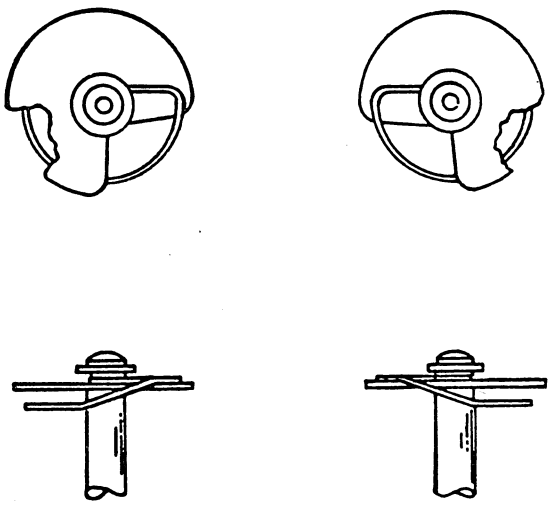

Figure 6D-22. Stacker Spring and Disk

D17 CLEARING A CARD JAM

To clear a card jam in the card reader, perform the following:

CAUTION

Never try to remove a jammed card by pulling the card in the direction opposite to the normal direction of card travel. This action permanently damages the card reader. Always use the following procedure to remove a jammed card.

1. Check to see if the card is visible at the left side of the card stacker. If it is, pull the card into the card stacker by hand. If the card is not visible, go to step 2.
2. Place power switch S1 in the off position (down) (figure 6D-23).
3. Open the decorative panel on the left side to expose the card path.
4. Remove the clamp spring from the read head and slide the head back along the guide pins (figure 6D-24).
5. Remove the jammed cards.

CAUTION

Always turn the large pulley of the card feed drum only in the direction of normal card movement. Turning the large pulley of the card feed drum in a direction opposite to that of normal card travel permanently damages the card reader.

6. If it is necessary to clean the head, use a lintfree cloth and alcohol.
7. Slide the head back into place and replace the clamp spring.

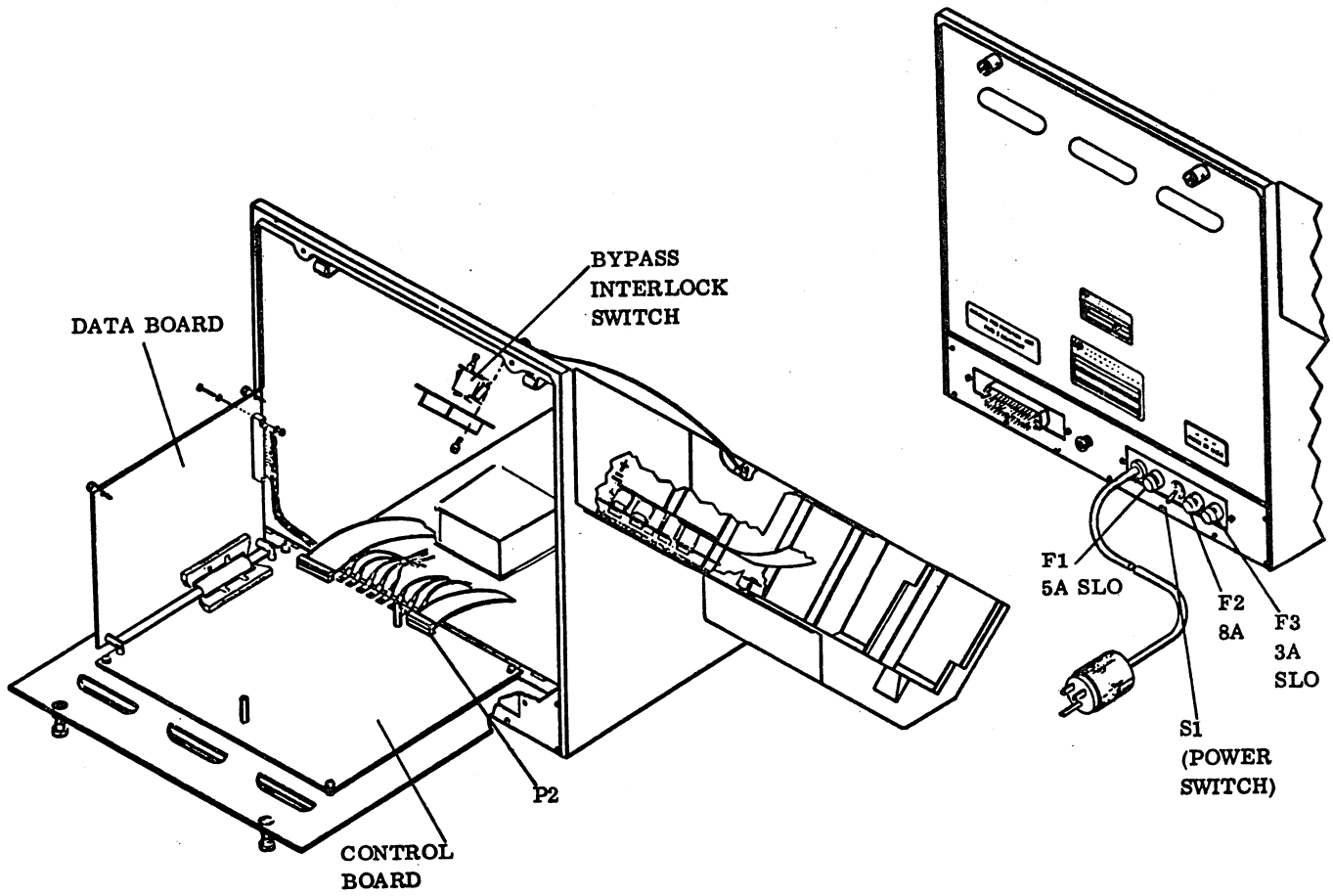

Figure 6D-23. Power Switch Location

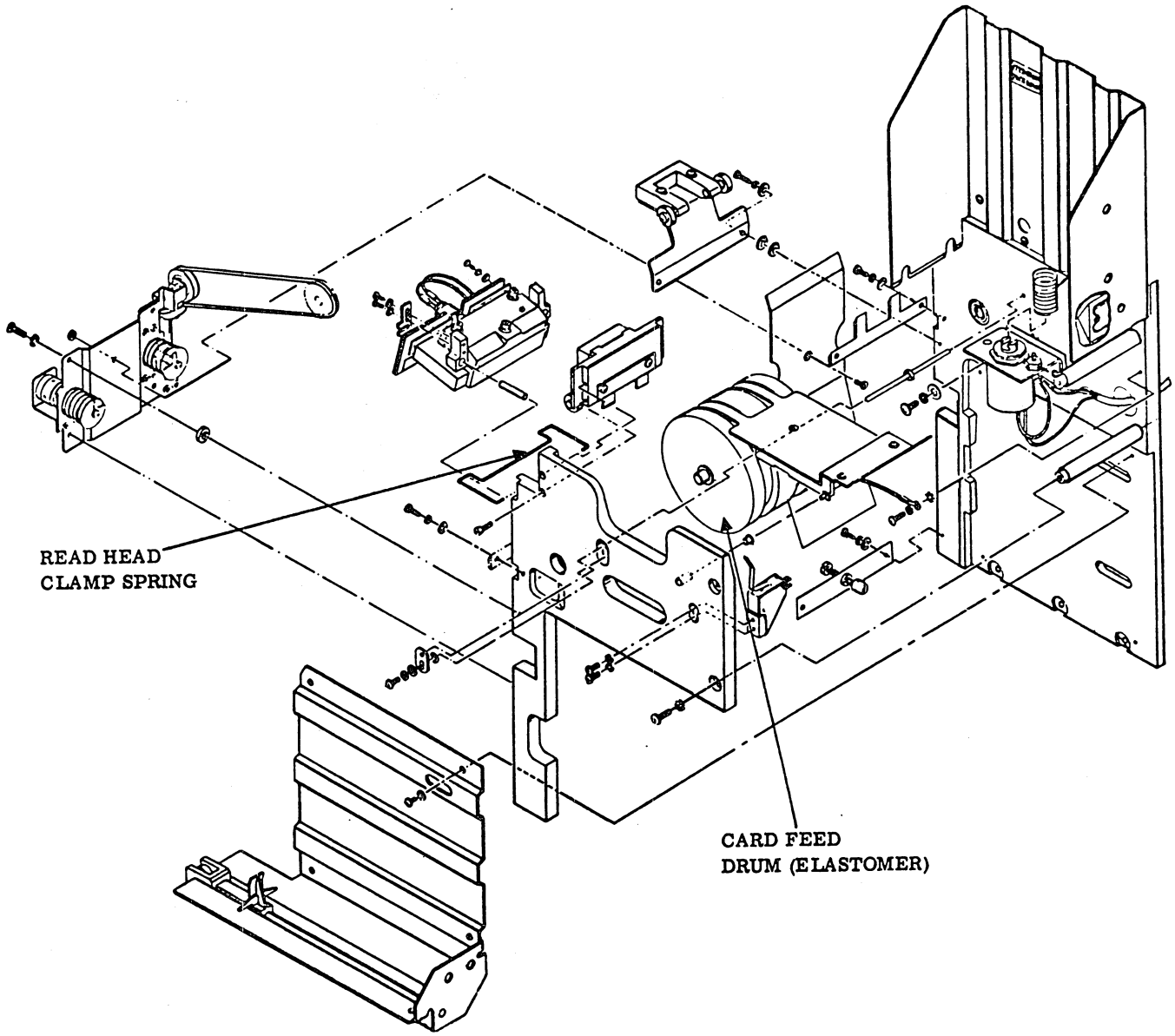

Figure 6D-24. Card Feed Assembly

D18 HEAD SKEW ADJUSTMENT

The following procedure requires special test equipment; do not proceed if this test equipment is not available. The special test equipment required is:

Diode – 1N914 or equivalent

Multimeter – 50 milliampere scale, Simpson 2601, or equivalent

Card deck – 300 cards, registration-verified, rows 12 and 9 punched for all columns 1 through 80 (figure 6D-25).

1. Connect the anode of the diode to the data test point on the control board (figure 6D-26). The data test point is the labeled terminal post near the function switches.
2. Set the multimeter to a 50-milliampere scale.
3. Connect the positive test lead of the multimeter to the cathode of the diode.

NOTE

The cathode end of the diode is normally marked by a band.

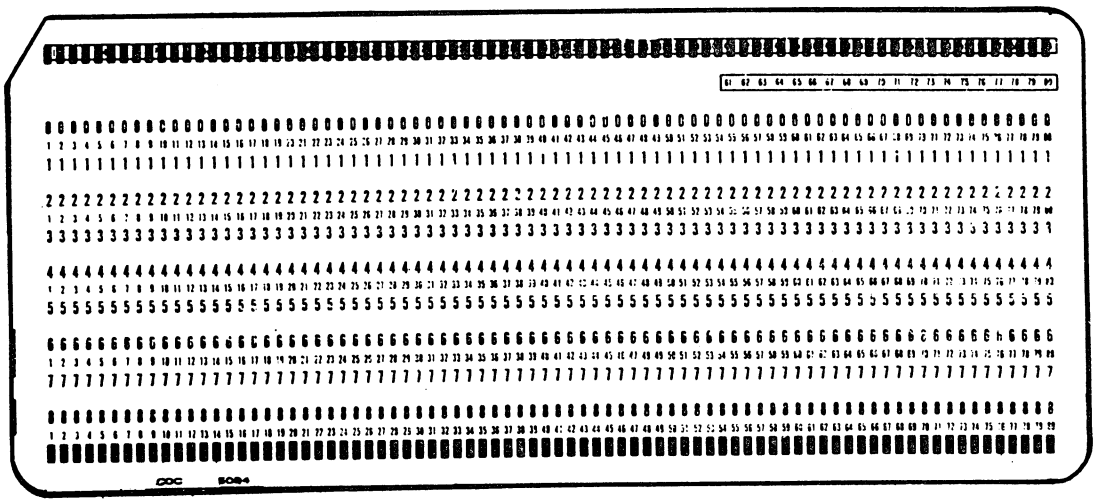

Figure 6D-25. Card Reader Test Deck (Skew Adjust)

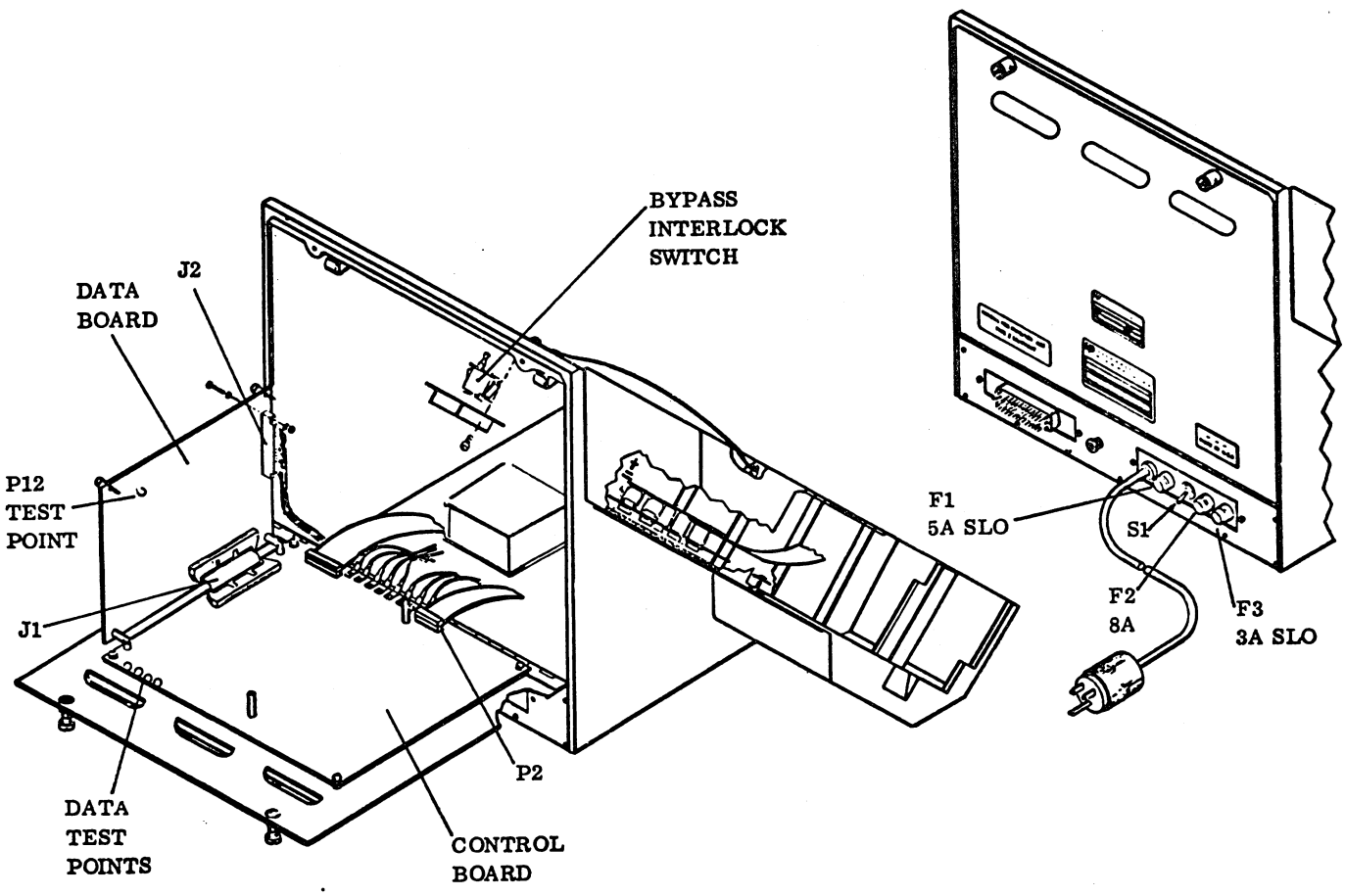

Figure 6D-26. Head Adjustment Test Points

4. Connect the negative test lead of the multimeter to the D12 test point on the data board (figure 6D-26). When the data board is raised to a vertical position, the D12 test point is the fourth terminal post from the top edge of the upper left corner of the data board.

5. Open the control panel housing door to expose the read head assembly. With needlenose pliers, pull the button of the interlock switch up to bypass the interlock (figure 6D-27).

6. Loosen the two read adjustment screws on the right side of the read head beneath the assembly clamp spring. Use a small Phillips screwdriver (see figure 6D-28).

7. Fan both ends of the skew card deck to break any bond between the cards. Align the cards in the deck by jogging the card deck on a smooth, flat surface.

8. Place the card deck in the card reader hopper, placing the cards face down with the 9-edge towards the back of the hopper.

9. Place the card weight on top of the cards.

10. Run the card reader off-line as in procedure D4.

11. Observe the multimeter and adjust the front right of the read head assembly for minimum current. Tighten the two screws at the side of the read head assembly when the minimum current is observed.

12. Arrange the card reader switches in their original configuration.

13. Remove the test leads from the card reader and secure the data board.

14. Swing up and close the rear panel.

15. Lift up the slider bar and lower the hopper/stacker assembly to its normal operating position. Secure the assembly to rotating the slotted screw at the back of the card hopper clockwise.

16. Close the indicator/switch control panel.

17. Go to procedure D31.

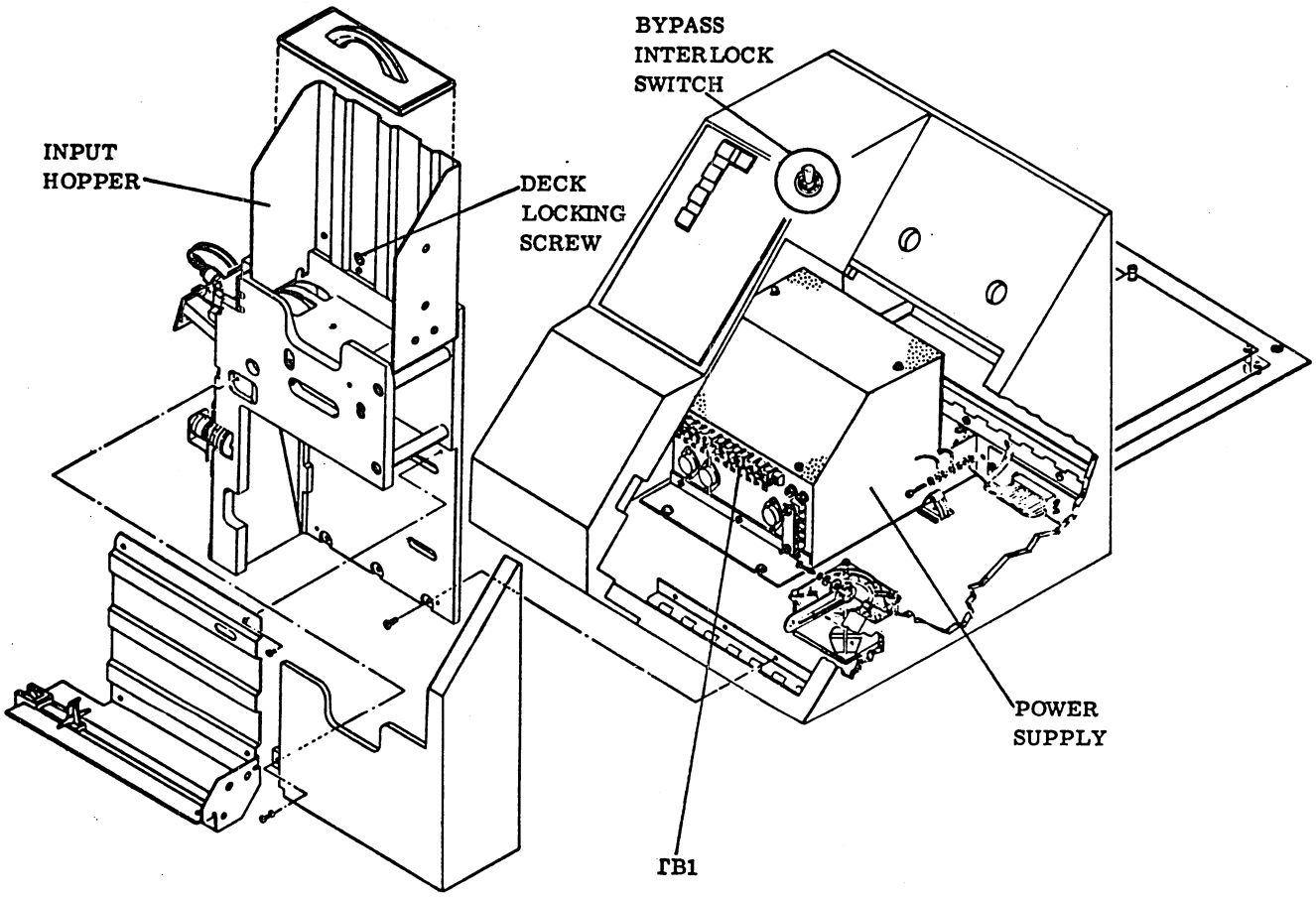

Figure 6D-27. Bypass Interlock Switch Location

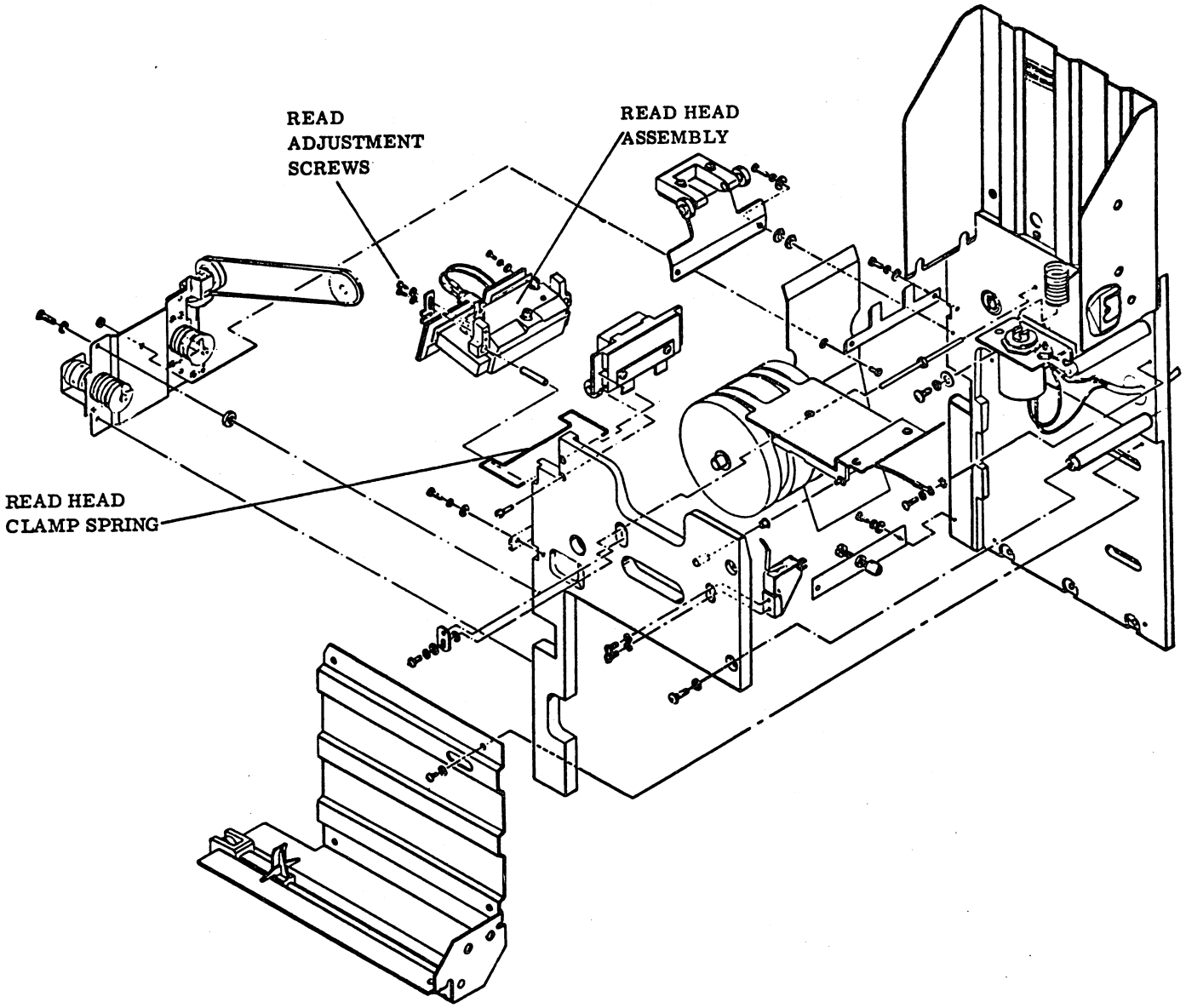

Figure 6D-28. Read Adjust Screws

D19 CLEANING THE CARD READER

1. To clean the card reader, turn off the power switch and perform the following:

   a. Grasp the indicator/switch control panel housing and swing the control panel up and to the left of the card reader.

   b. Open and swing the rear panel of the card reader down by first turning the fasteners at the upper edge of the rear panel one quarter turn counterclockwise.

   c. Rotate the slotted screw at the back of the card hopper counterclockwise until the deck assembly releases.

   d. Grasp the front edge of the card hopper and pull forward to raise the hopper/stacker assembly to a vertical position. Lock the assembly in the vertical position by pushing down on the slider bar at the bottom right of the assembly to engage the slot in the bar.

CAUTION

Always turn the card feed drum in the direction of normal card travel when performing the following steps. Turning the card feed drum in a direction opposite to normal card travel permanently damages the card reader.

e. Remove the read head assembly (refer to procedure D14, steps 9 and 10, if needed). Clean the card dust from the read head assembly and card feed drum using a vacuum cleaner and a small, soft brush. Do not blow the card dust from the read head assembly. Each card wipes the light-distribution block and fiber bundles; blowing dust from the read assembly forces dust into this area and unnecessarily burdens this automatic cleaning feature. Return the read head assembly to its original position. Rotate the card feed drum for cleaning by turning the large pulley of the card feed drum in the direction of normal card travel. Check that the pressure rollers at the feed throat are rotating with the feed drums.

f. Clean the hopper/stacker assembly and the inside of the cabinet using a vacuum cleaner and brush.

g. Clean the card feed drum with a lint-free cloth moistened with water while turning the large pulley of the card feed drum in the direction of normal card travel. Bear down on the drums.

2. To perform visual inspection of the card reader:

a. Loosen the two screws at the right edge of the data board (the smaller of the two boards mounted on the rear panel) and swing the data board up.

b. Check that the cables and wires are secure and free from insulation breakdown or other damage.

c. Check all electrical connections for damage or loose connections.

d. Check for foreign objects, such as bits of wire or solder.

e. Check electronic components for signs of deterioration, such as overheating.

f. Verify that all electrical connectors are tight.

g. Verify that the feature switches are as illustrated in tables 4D-2, 4D-3 and figure 4D-7 in volume 1.

h. Lower the data board and secure the two screws at the right edge of the board.

i. Swing up and close the rear panel.

j. Restore power to the card reader.

D20 FEED SOLENOID REPLACEMENT

This procedure requires special equipment and technical assistance. It is included only to maintain continuity of the manual.

To replace the feed solenoid of the card reader, perform the following:

1. Remove power from the card reader:

a. Place rear panel toggle switch S1 down.

b. Disconnect the card reader ac power cord from the site power outlet.

2. Grasp the indicator/switch control panel housing and swing it up and to the left of the card reader.

3. Remove the front trim panel (between the input hopper and the output stacker) by removing the screw on the left side of the panel and sliding the panel to the left of the card reader (figure 6D-29).

4. Open the rear panel of the card reader.

5. Rotate the slotted screw at the back of the card input hopper counterclockwise. Pull the deck assembly forward to an upright position and lock down the slider (figure 6D-29).

6. Disconnect the solenoid leads from terminals 3, 6, and 8 of the horizontal terminal board on the power supply (figure 6D-29). Open the cable wrap to the solenoid assembly (figure 6D-30).

7. Insert a number 10 Allen wrench through the access slot located in the front plate of the mechanical deck assembly and remove the 10-32 screw and flat lockwashers.

8. Insert a wrench through the access slot and engage the remaining screw. Remove the screw while holding the solenoid from underneath. Withdraw the solenoid and slide the shaft off the connector T slot and shim behind the solenoid bracket.

9. To install the new solenoid, slide the solenoid shaft T slot into the feed plate connector. Slide the solenoid over the shaft and press upward until the right-hand mounting hole on the solenoid mounting plate is aligned with the tapped hole on the rear deck.

NOTE

The deck should be in a closed position prior to replacing the solenoid.

10. Slip the solenoid spring into the solenoid shaft and hold it in position.

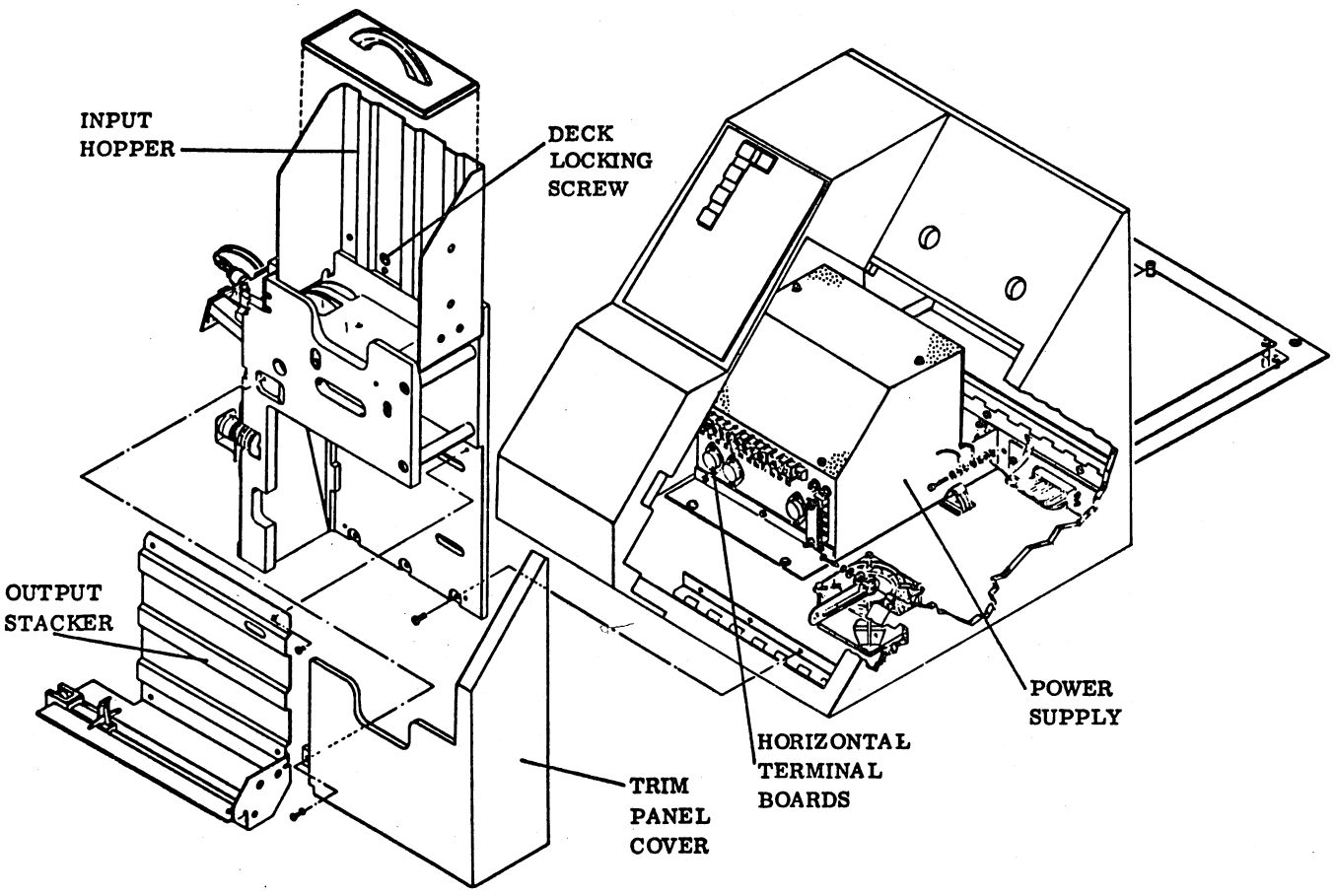

Figure 6D-29. Trim Panel Mounting

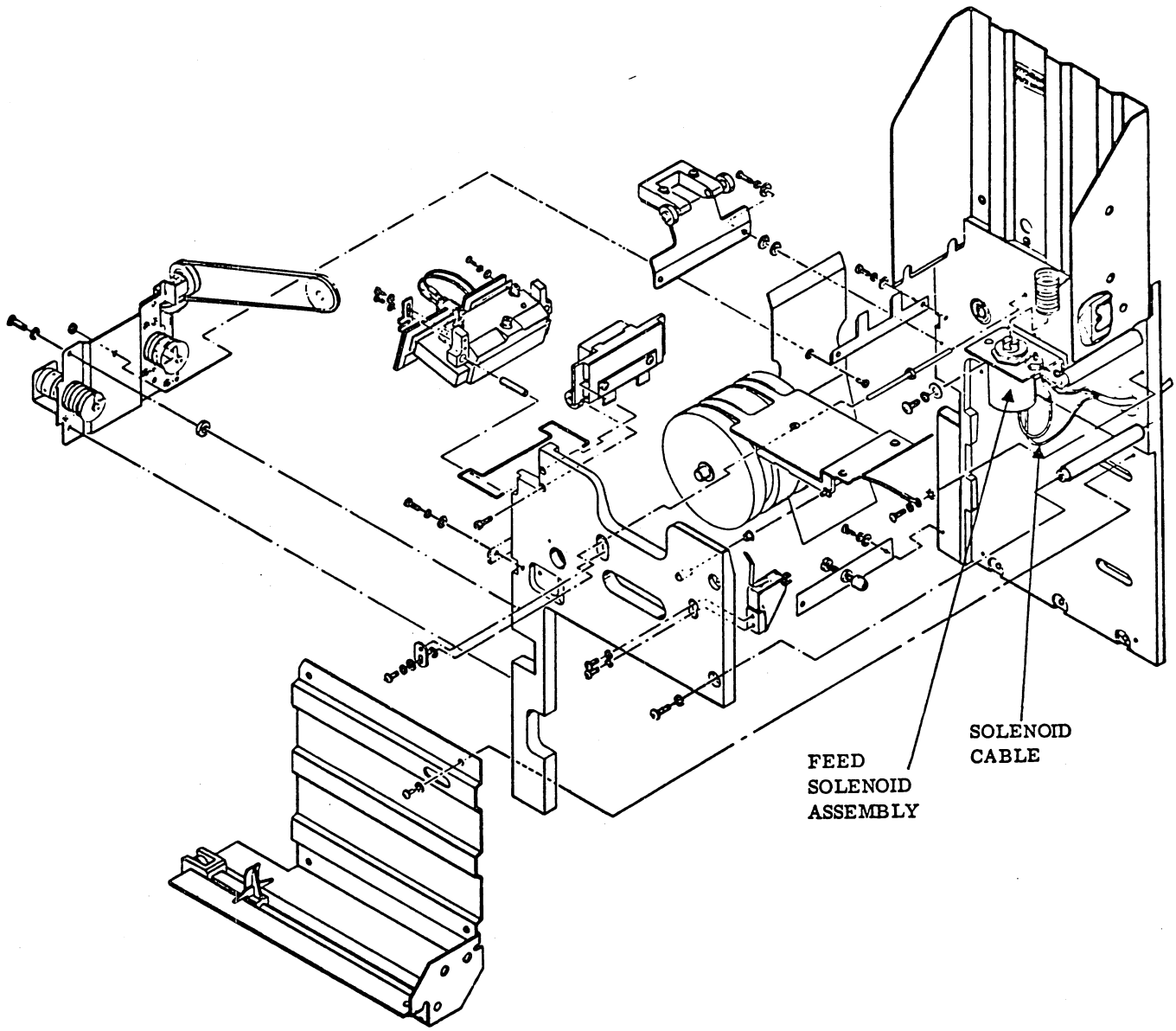

Figure 6D-30. Feed Solenoid

11. Position the shim behind the solenoid. Insert a number 10-32 screw (with washer) into the tapped hole and tighten only enough to hold the solenoid assembly firmly. Do not tighten too much.

12. Align the hole in the left side of the solenoid mounting bracket with the tapped hole in the rear of the plate, and securely tighten it with a number 10-32 screw and flat lockwasher.

13. Reroute the solenoid leads to the power supply. Reconnect the wires to terminal strips 3, 6, and 8. Retie the cable wraps.

14. Check the feed plate throw as in procedure D27 before continuing to the next step.

15. Reinstall the light-colored trim panel.

16. Secure the deck assembly by rotating a slotted screw in the hopper clockwise (figure 6D-31).

17. Close the indicator/switch control panel.

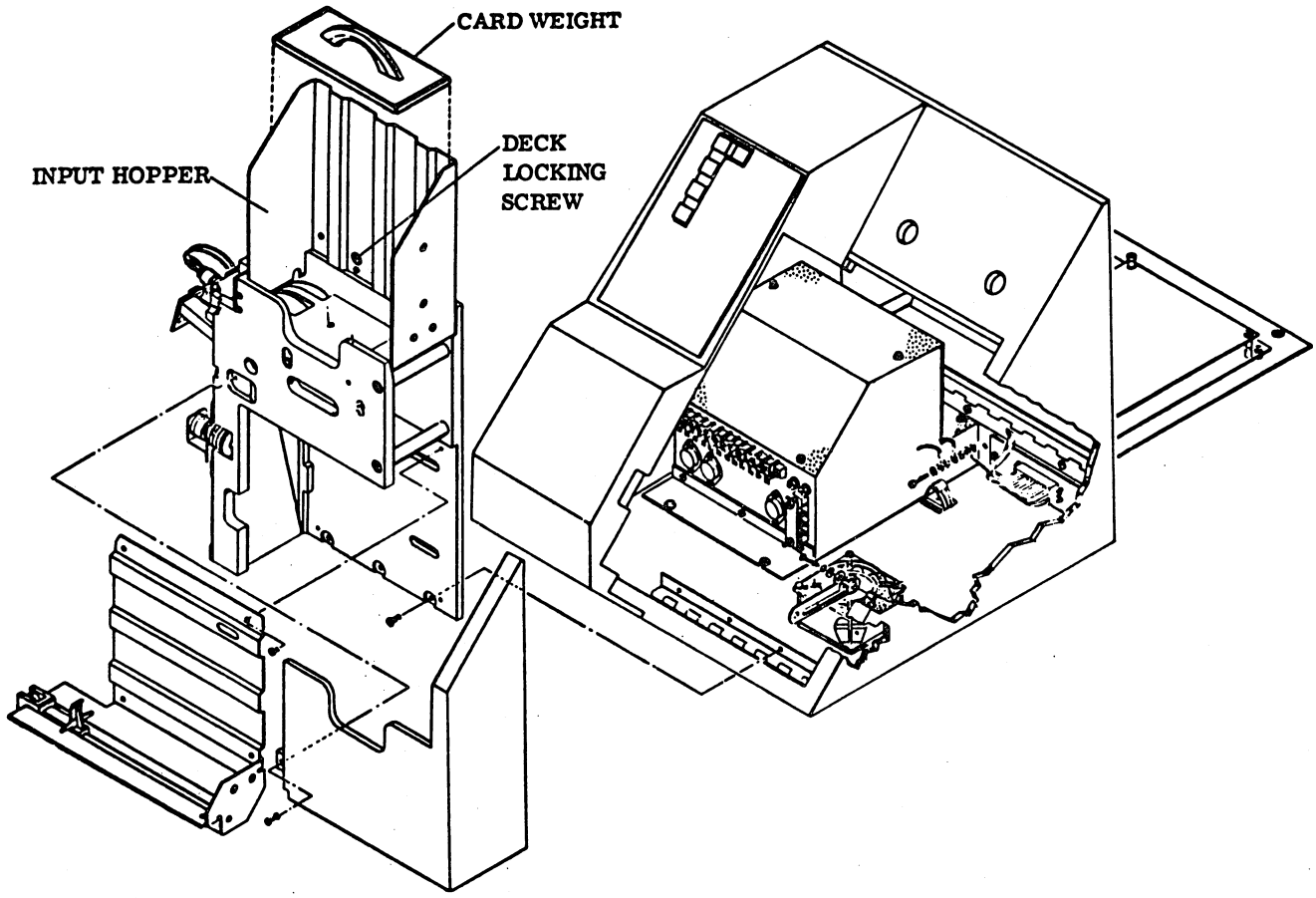

Figure 6D-31. Deck Locking Screw

18. Apply power to the card reader:

    a. Connect the card reader ac power cord to the site power outlet.

    b. Place rear panel toggle switch S1 up.

19. To ensure operation of the feed solenoid, run the card reader off-line according to procedure D4.

20. Set the card reader switches according to section 4D, volume 1.

D21 READ HEAD LAMP REPLACEMENT

To replace the card reader read head lamp (figure 6D-32), perform the following:

1. Remove power from the card reader:

    a. Place rear panel toggle switch S1 down.

    b. Disconnect the card reader ac power cord from the power distribution box.

2. Grasp the indicator/switch control panel housing and swing it up and to the left of the card reader.

3. Disconnect the two wires from the read head lamp.

4. Note the relative positions of the end of the read head lamp and the nut that secures it. When a new lamp is

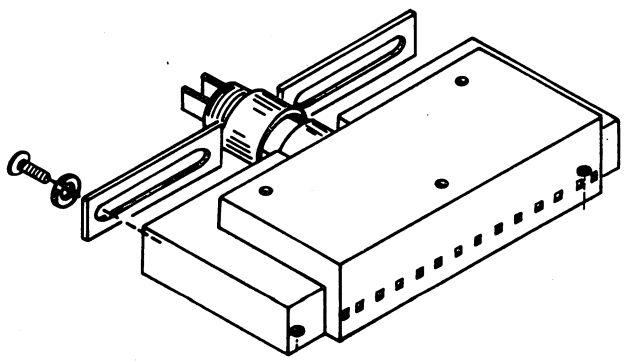

Figure 6D-32. Read Head Assembly

installed, the lamp and nut should have the same relative positions as the ones they are replacing.

5. Loosen the nut and unscrew the read head lamp from the read head assembly.

6. Remove the nut from the read head lamp.

7. Install the nut at the terminal end of a new read head lamp.

8. Screw the read head lamp into the socket. Adjust the lamp and nut so that when the nut is tightened, the lamp and nut will have the same relative position as noted in step 4 above.

9. Connect the two wires to the read head lamp. Slide the contacts home using the end of a small common-tip screwdriver.

10. Close the indicator/switch control panel.

11. Apply power to the card reader.

    a. Connect the card reader ac power cord to the power distribution box.

    b. Place rear panel toggle switch S1 up.

12. Perform the read lamp adjustment, procedure D11, steps 22 through 29.

13. Go to procedure D31.

D22 TIMING LAMP REPLACEMENT

To replace the timing lamp of the card reader (figure 6D-33), perform the following:

1. Remove power from the card reader.

    a. Place rear panel toggle switch S1 down.

    b. Disconnect the card reader ac power cord from the site power outlet.

2. Open the control panel housing door to expose the read head assembly.

3. Loosen the slotted deck locking screw at the back of the input hopper, pull the deck assembly forward, and lock it upright (figure 6D-34).

4. On the rear left of the deck assembly, loosen the set screw holding the timing lamp leads at the quick disconnect receptacle. Remove the lamp.

5. Insert a new timing lamp into the timing lamp holder so that the lamp filament is parallel to the scribe marks on the timing disk; then reverse the procedure performed in step 4 above.

6. Tighten the locking screw.

7. Connect the timing lamp cable. Apply power to the card reader.

8. With needlenose pliers, pull the button of the interlock switch up to bypass the interlock (figure 6D-34).

9. Place the switches on the control and data boards in the off-line operating position according to procedure D4.

10. Perform a timing lamp adjustment (procedure D11, steps 15 through 20 and 27 through 29) before continuing.

11. Place the switches on the control board in their original positions and lock down the data board. Close the rear panel.

12. Go to procedure D31.

D23 THROAT GAP ADJUSTMENT

To adjust the card reader throat gap (figure 6D-35), perform the following:

1. Remove power from the card reader:

    a. Place rear panel toggle switch S1 down.

    b. Disconnect the card reader ac power cord from the site power outlet.

2. Grasp the indicator/switch control panel housing and swing the control panel up and to the left of the card.

3. Before setting the throat gap, loosen the two 6-32 screws holding the pressure roller assembly to the card selector block (figure 6D-35). Lower the roller support assembly until the two outer rollers of the support assembly just contact the elastomer surface of the transport drum. Maintaining contact between the rollers and the drum surface, retighten the two 6-32 screws. The same procedure is followed for the bearing in the center of the support assembly. Loosen the 632 screw that contains the roller bearing support, and establish contact between the roller bearing and the surface of the card transport drum. Maintain contact and retighten the screw. For the throat gap adjustment, use the lowest point on the individual elastomer ring of the drum as a reference. Slip a 0.008 inch (0.203mm) feeler gauge between each card selector and the drum. Attempt to move the gauge back and forth. The gauge should fit snugly but should not cause noticeable drum rotation. Repeat this procedure for the other card selector. Adjust the throat gap by loosening the selector clamp and adjusting the compression spring by the 6-32 screw mounted on top of the card selector block.

4. Close the indicator/switch control panel.

5. Apply power to the card reader:

    a. Connect the card reader ac power cord to the ac power outlet.

    b. Place rear panel toggle switch S1 up.

6. Run the card reader off-line, using procedure D4, to ensure card feed operation.

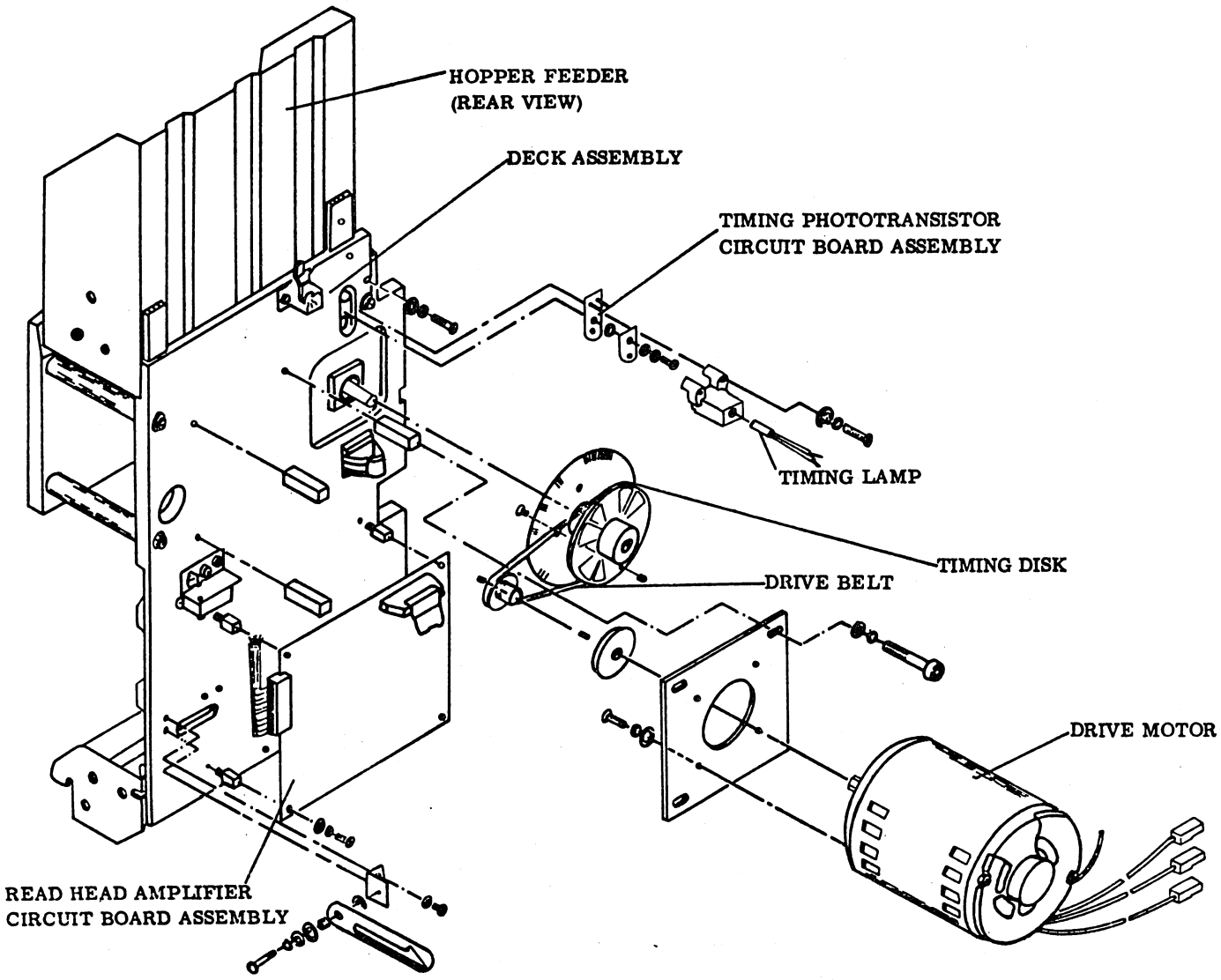

Figure 6D-33. Timing Lamp

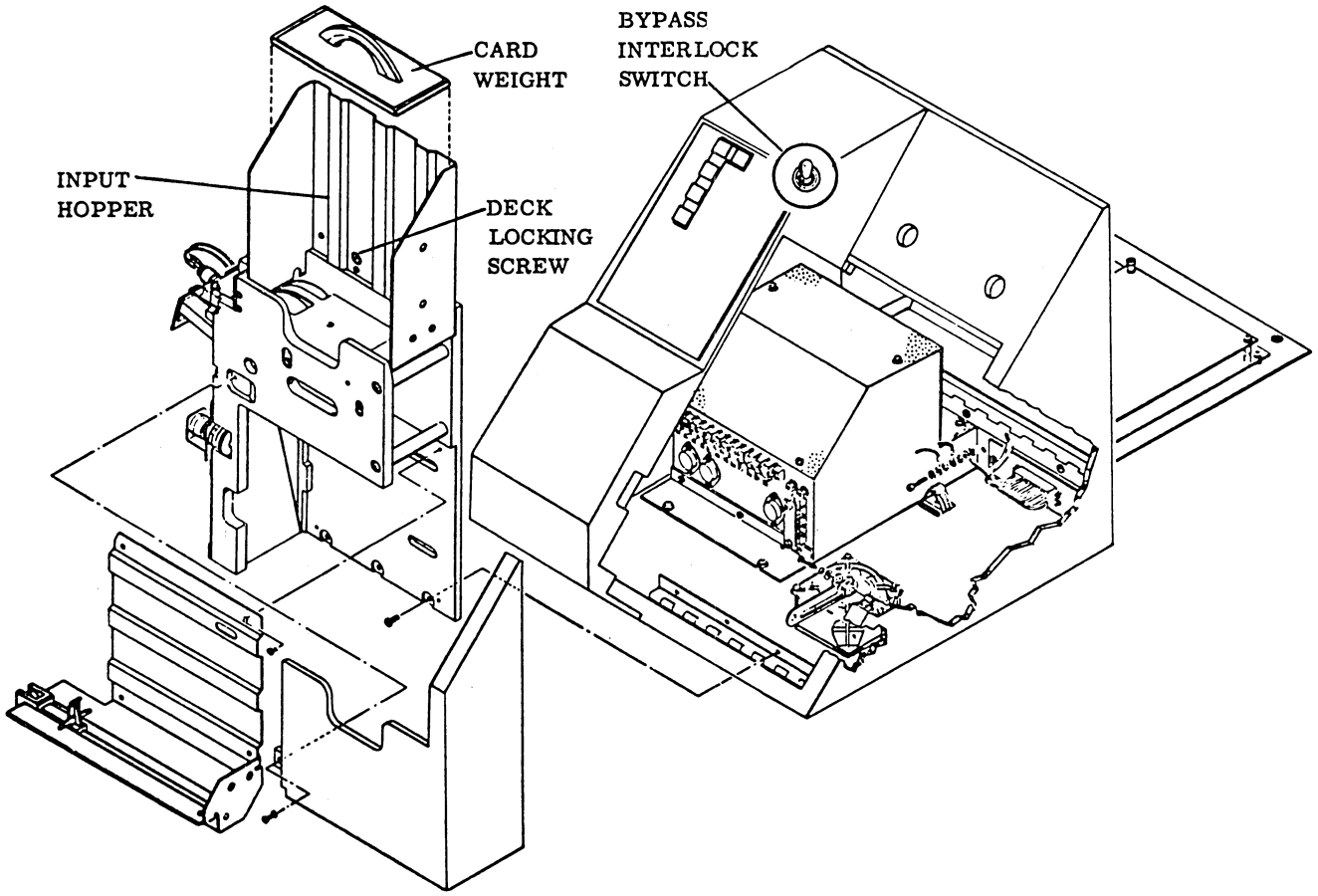

Figure 6D-34. Removing the Input Hopper

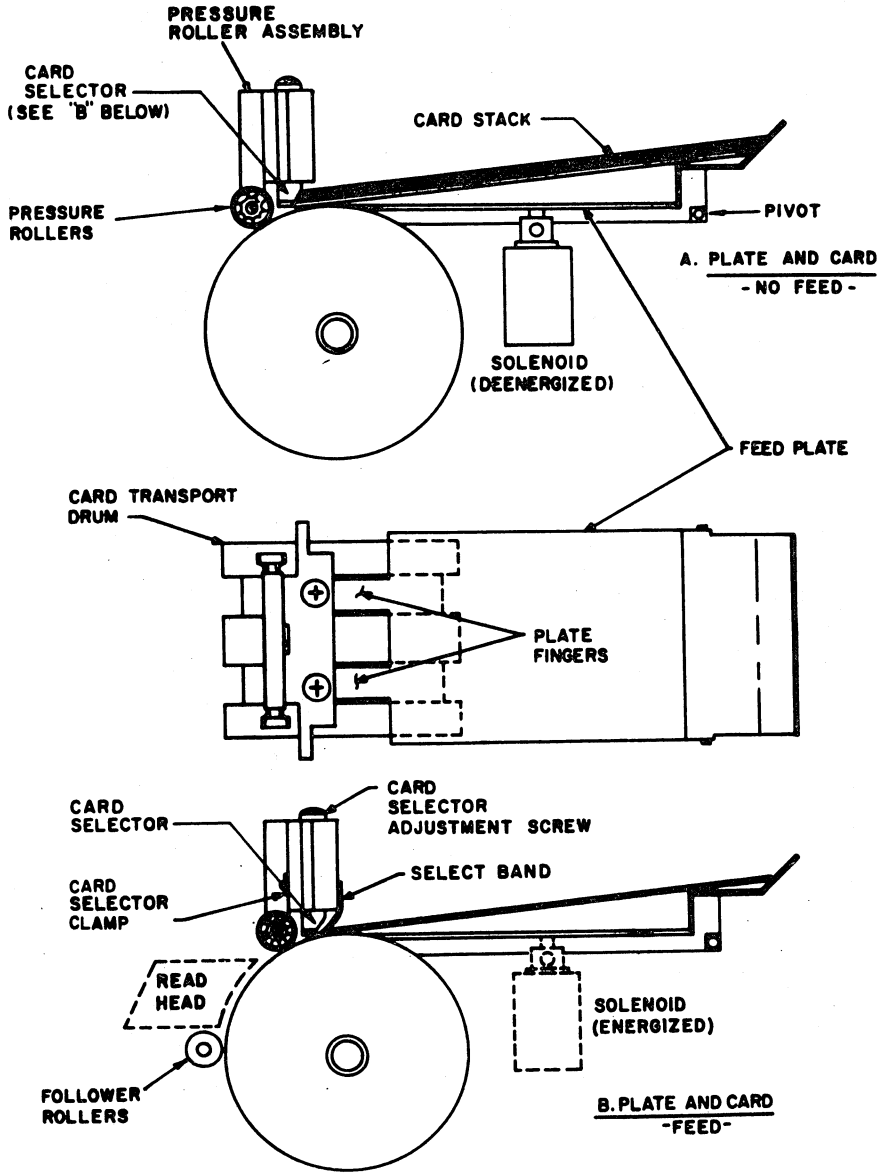

Figure 6D-35. Feed Mechanism Components

D24 POWER SUPPLY REPLACEMENT

To replace the power supply (figure 6D-36), perform the following:

1. Disconnect the power cord plug from the power distribution box.
2. Tag all cable wires entering the power supply to identify the appropriate terminal assignment. Remove all wire connections and draw them clear to the power supply.
3. Remove two number 6 socket head screws that secure the power supply fuse/switch/plug panel to the rear of the reader cabinet.
4. Remove the number 6 socket head screw that secures the power supply base to the cabinet base (located beneath the vertical terminal board of the power supply).
5. Lift the power supply through the rear panel opening of the cabinet.

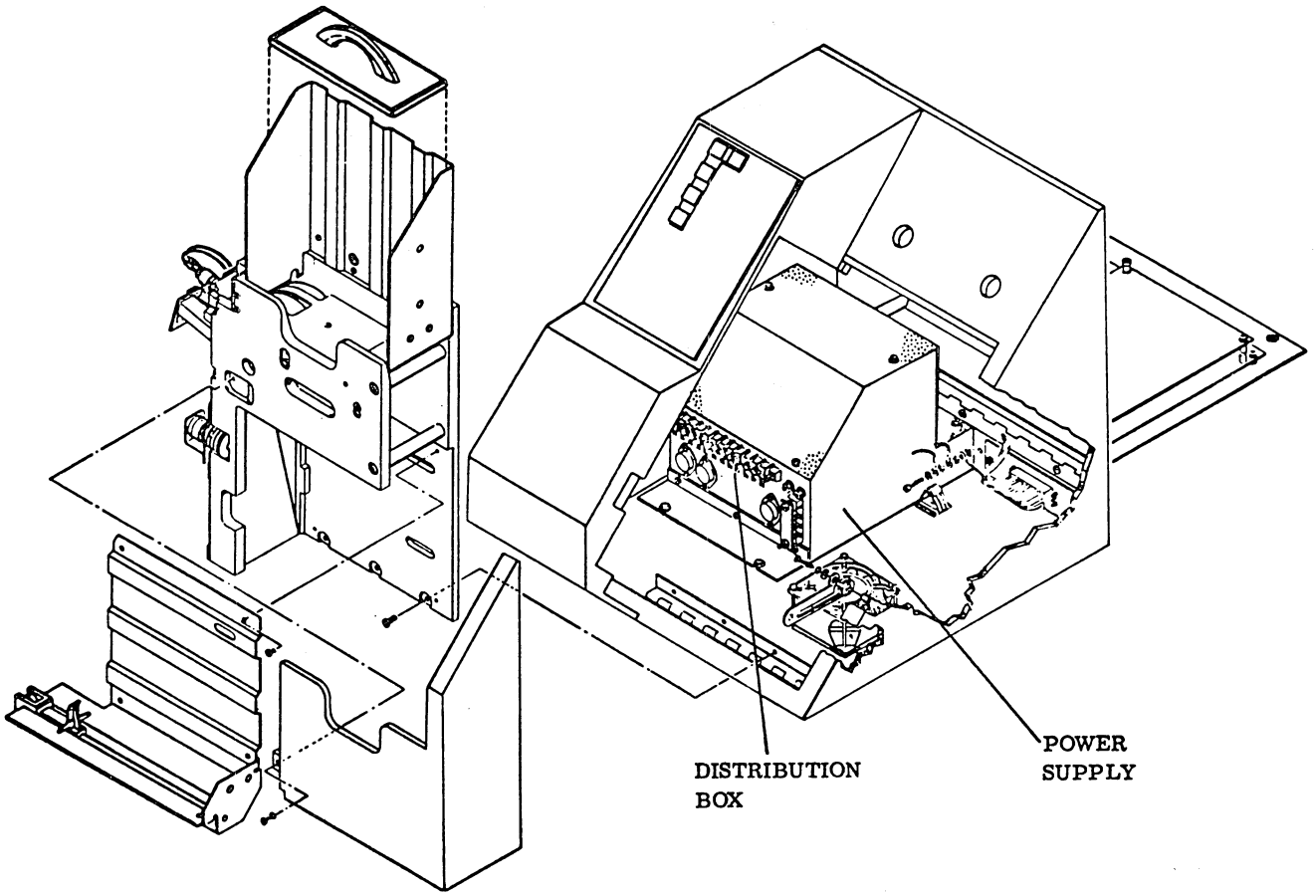

Figure 6D-36. Power Supply

6. Install a new power supply by reversing steps 1 through 5.

7. Reconnect all tagged wires according to their terminal locations, and recheck the power supply (procedures D5 and D6).

D25 CARD READER/LINE PRINTER CONTROLLER REPLACEMENT

To replace the card reader/line printer controller, perform the following:

1. Remove the cover plate at the front of the logic chassis by turning the two captive fasteners one quarter turn counterclockwise.

2. Remove the controller board, using the extractor tool attached to the logic chassis cover plate (see figure 4A-3, volume 1, board slot location).

3. Prior to inserting a new controller board, verify that the equipment address, interrupt line, and program protect jumpers agree with the normal configuration setting described in section 4D, volume 1. Also verify that the external feed toggle switch is in the forward position (figure 6D-37).

D26 HOPPER EMPTY SWITCH REPLACEMENT

To replace the hopper empty switch (figure 6D-38), perform the following:

1. Remove the front cover of the card reader from the deck assembly by removing the screw and pushing the cover sideways (figure 6D-39).

2. Disconnect the switch leads, noting their position, at the quick disconnect receptacle.

3. Remove the two screws that attach the switch bracket to the front plate of the deck assembly (figure 6D-38).

4. Remove the switch.

5. Replace the switch, and adjust it for free action with two 6-32 screws on the front plate assembly. Replace the quick disconnect leads noted in step 2 above.

6. Replace the cover on the front deck assembly.

7. Process the cards off-line according to procedure D4 and ensure that the cards do not bind on the switch and that the last card feeds properly.

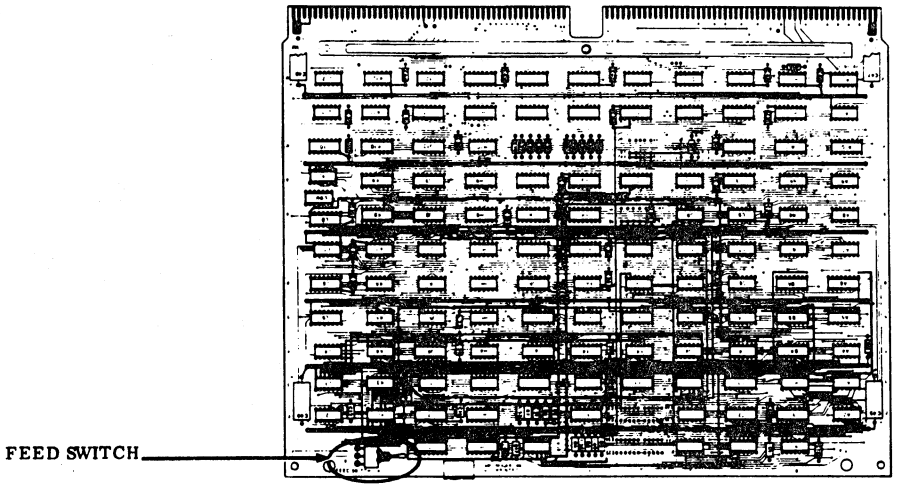

Figure 6D-37. Card Reader/Line Printer Controller

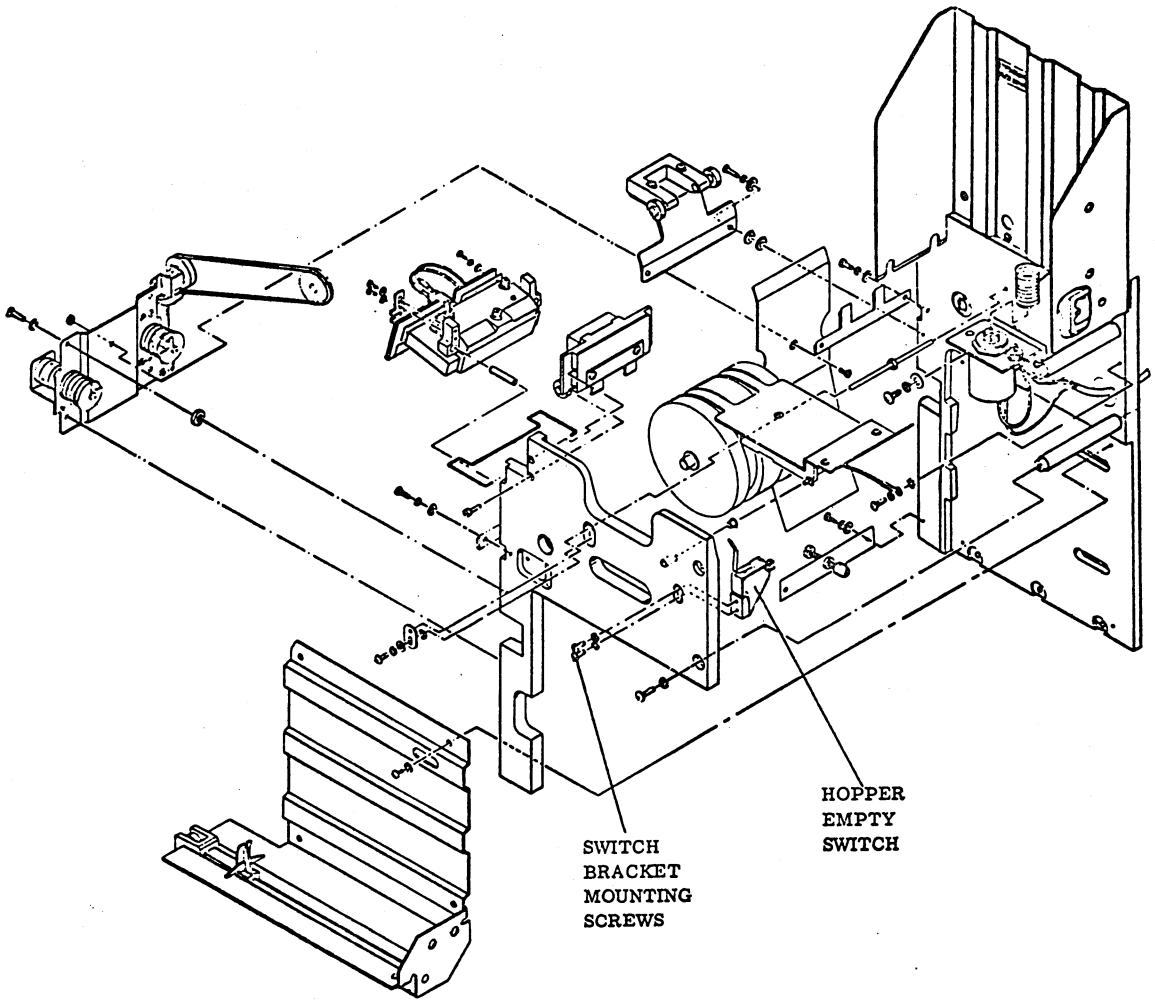

Figure 6D-38. Replacing the Hopper Empty Switch

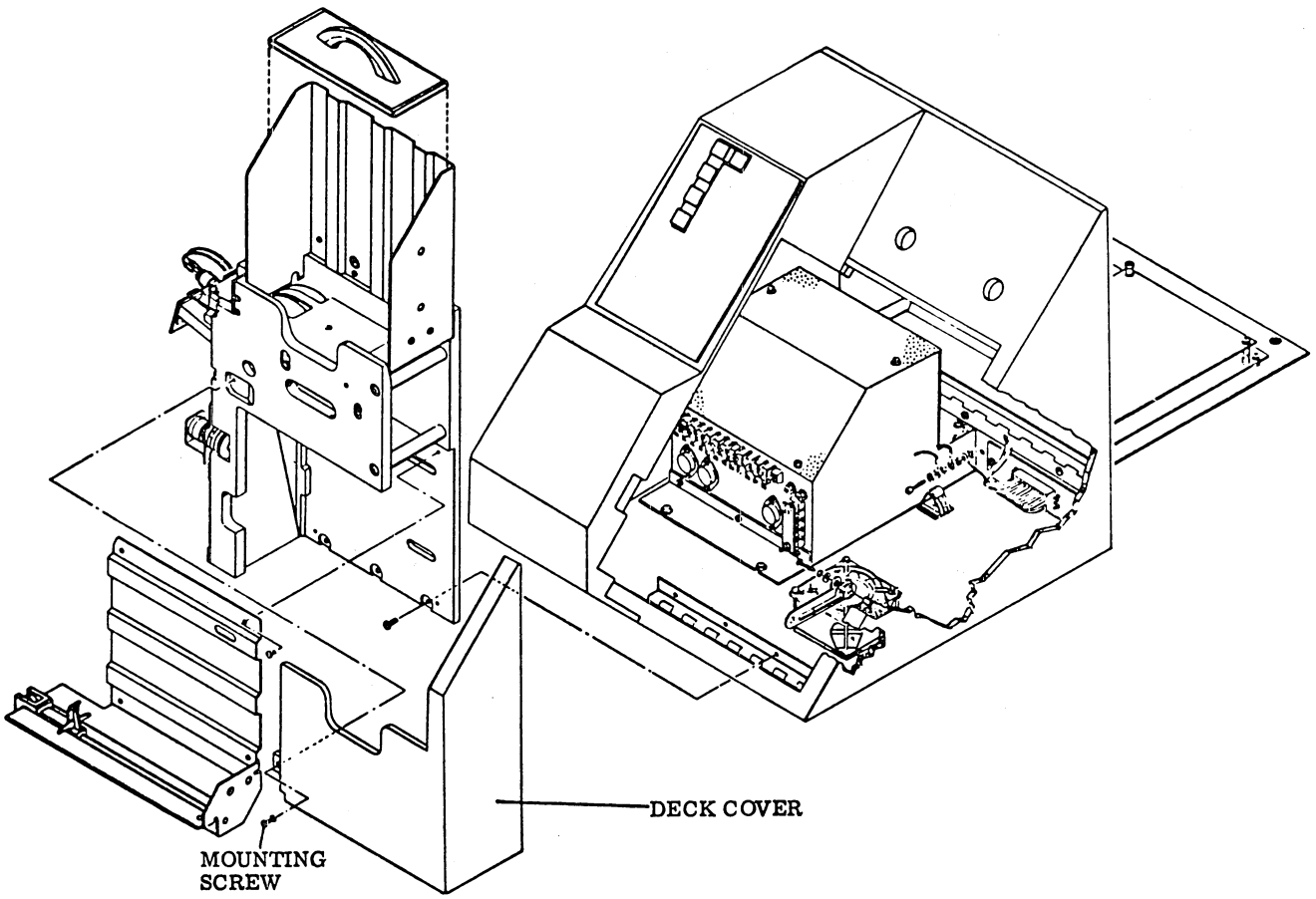

Figure 6D-39. Deck Cover (Trim Panel) Mounting/Removal

D27 FEED PLATE ADJUSTMENT/CHECK

An undamaged (symmetrical) feed plate, operating in conjunction with an appropriately installed and functionally correct solenoid assembly, should exhibit the following conditions (figure 6D-40):

- De-energized – Feed plate fingers should be 0.060 inch to 0.075 inch (1.524 mm to 1.905 mm) above the elastomer rings on the transport drum.
- Energized – Feed plate fingers should deflect no less than 0.090 inch (2.286 mm) below the elastomer rings on the transport drum.

Using the feed plate gauge (part number 73715400), refer to figure 6D-40 and check the minimum/maximum deflections as follows:

1. Place the gauge against the left-hand side wall of the input hopper with the calibrated tang cutout notches down.
2. Allow the gauge to rest across the input throat (i.e., the notches straddle the feed plate tangs). Press the gauge firmly against the elastomer rings; the feed plate tangs should not be depressed.
3. Reverse the position of the gauge (i.e., place the calibrated extensions over the feed plate tangs).
4. Press the feed plate down firmly; the operator's finger should remain pressing until the shoulders of the gauge are seated across the drum.
5. If any of the above steps are not met, adjust the feed plate stroke by removing the front panel and loosening the two screws on the left hand side of the deck until the proper stroke is met (figure 6D-41).

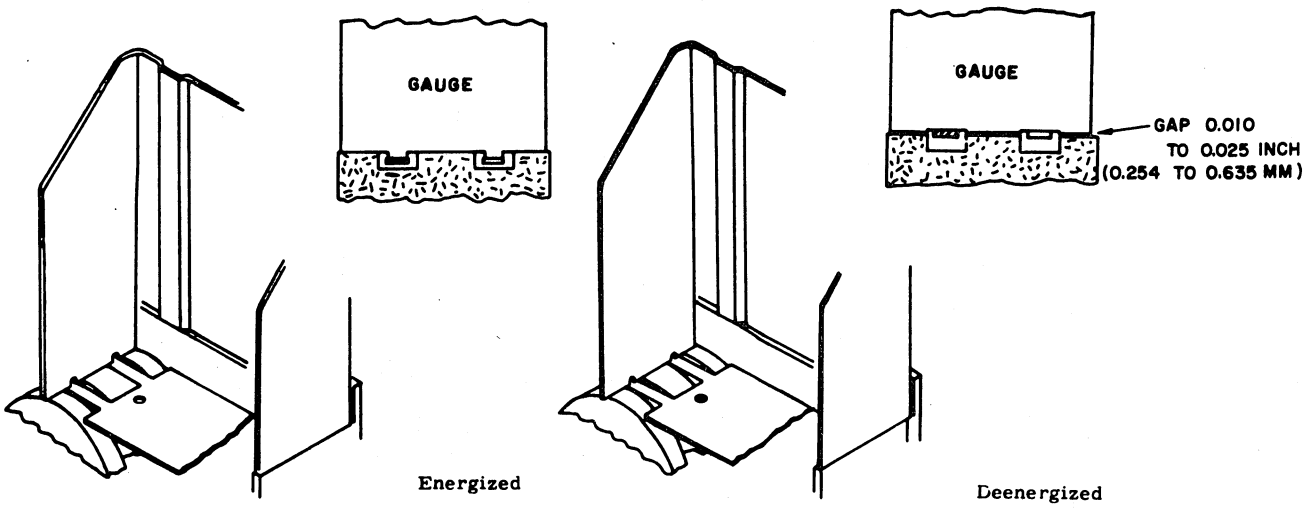

Figure 6D-40. Feed Plate-to-Drum Mechanical Check

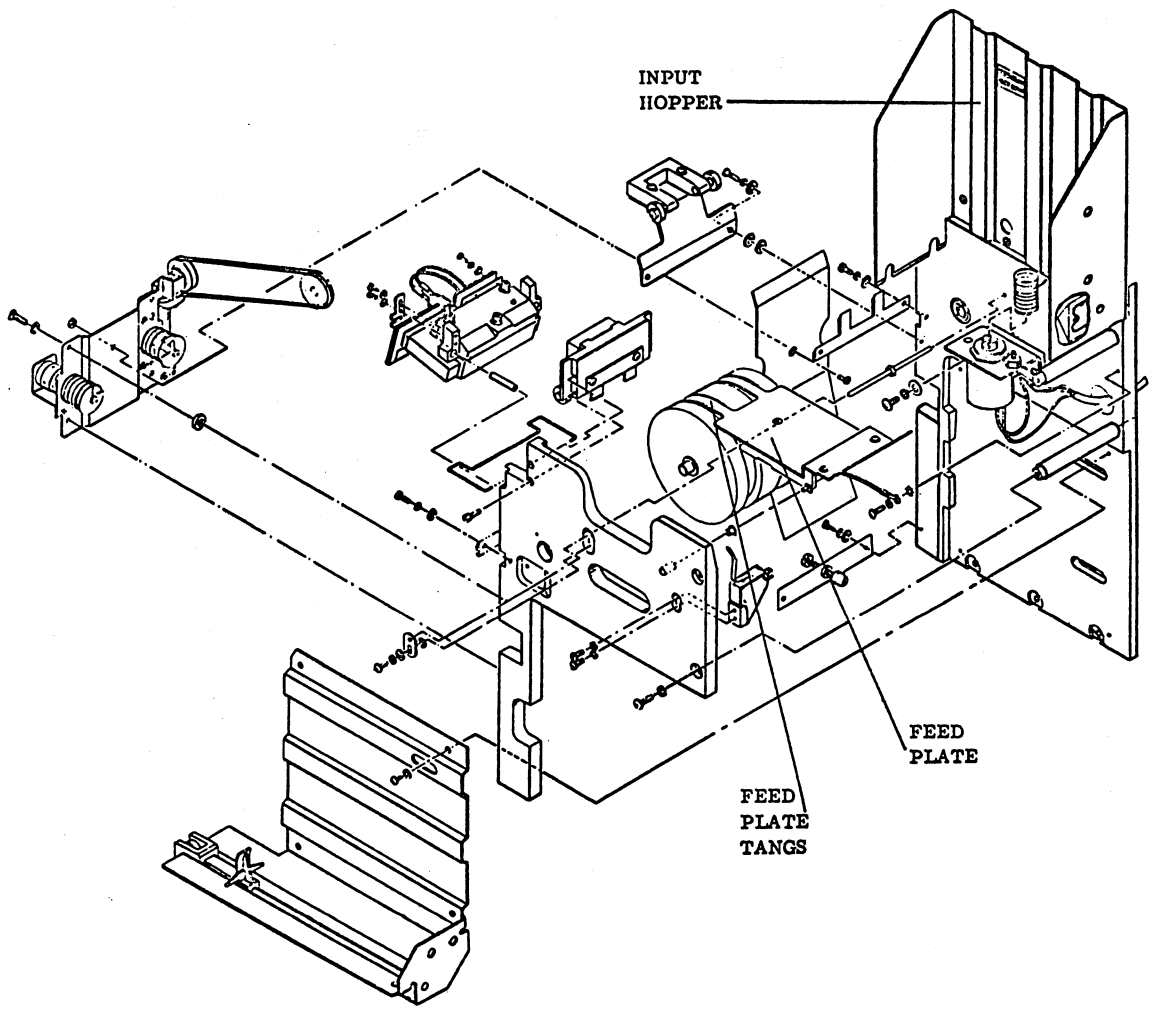

Figure 6D-41. Feed Plate Stroke Adjust

D28 TIMING MASK/PHOTOTRANSISTOR REPLACEMENT

This procedure requires special equipment and technical assistance. It is included only to maintain the continuity of the manual.

To replace the timing mask/phototransistor, perform the following:

1. Open the front panel door, and swing the deck assembly upright. Secure it. Remove power according to procedure D2.
2. Remove the mask and phototransistor by performing the following (figure 6D-42):
   a. Remove the lamp housing by removing the two screws securing the housing to the deck assembly.
   b. Remove the color-coded leads from the pickup assembly and note which color goes to which lead.
   c. Remove the pulley and timing disk by removing the drive belt, loosening the set screws securing the pulley to the drum shaft, and sliding the pulley off.
   d. Remove the 6-32 screw that secures the mask/phototransistor pickup to the rear deck and ease the assembly out of the cutout slot.
3. To install a new phototransistor and mask, place the phototransistor on a flat surface and reassemble with the plastic spacer and mask in that order.

NOTE

The marked side of the mask must face away from the deck.

4. Align the screw holes on the plastic spacer and mask, and insert the 6-32 by 3/8-inch screw with a lock and flat washer.
5. Lift the entire assembly and position it in the cutout notch on the rear deck plate. Tighten the mounting screw.
6. Replace the pulley, timing disk (procedure D29), and belt.
7. Replace the timing lamp housing.
8. Reconnect the phototransistor pickup wires to the terminals.
9. Adjust the timing lamp according to procedure D11.

D29 TIMING DISK REPLACEMENT

This procedure requires technical assistance to perform and is included only to maintain the continuity of the manual.

To replace the card reader timing disk (see figure 6D-42), perform the following:

1. Open the door of the front control panel housing and lift the deck assembly upright; then secure.
2. Remove the timing lamp housing by removing the two screws securing the assembly to the deck.
3. Remove the timing belt from the timing pulley assembly.
4. Loosen the two 8-32 screws on the hub and slide the pulley and timing disk from the shaft.
5. Remove the four 6-32 head screws securing the disk to the pulley surface and inspect the disk for surface damage.
6. Install the new timing disk, if necessary, onto the pulley, and slide the assembly back onto the shaft. Do not tighten the set screws.
7. Tear four strips of punched card stock. Insert two pieces of card between the deck and the timing disk on both the top and bottom parts of the disk.
8. Lightly apply pressure to the disk assembly against the deck and tighten the two set screws.
9. Remove the card strips, rotate the pulley, and ensure that the disk does not rub on the deck assembly.
10. Replace the timing belt and lamp housing.
11. Perform the timing lamp adjustments according to procedure D11.
12. Lower the deck assembly and secure it. Close the front panel control housing.
13. Make sure the control and data board switches are in their original configurations (on-line operation).

D30 DRIVE BELT REPLACEMENT

To replace the card reader drive belt (see figure 6D-42), perform the following:

1. Rotate the slotted screws at the back of the card hopper one quarter turn counterclockwise.
2. Grasp the front edge of the card hopper and pull it forward to raise the hopper/stacker assembly to a

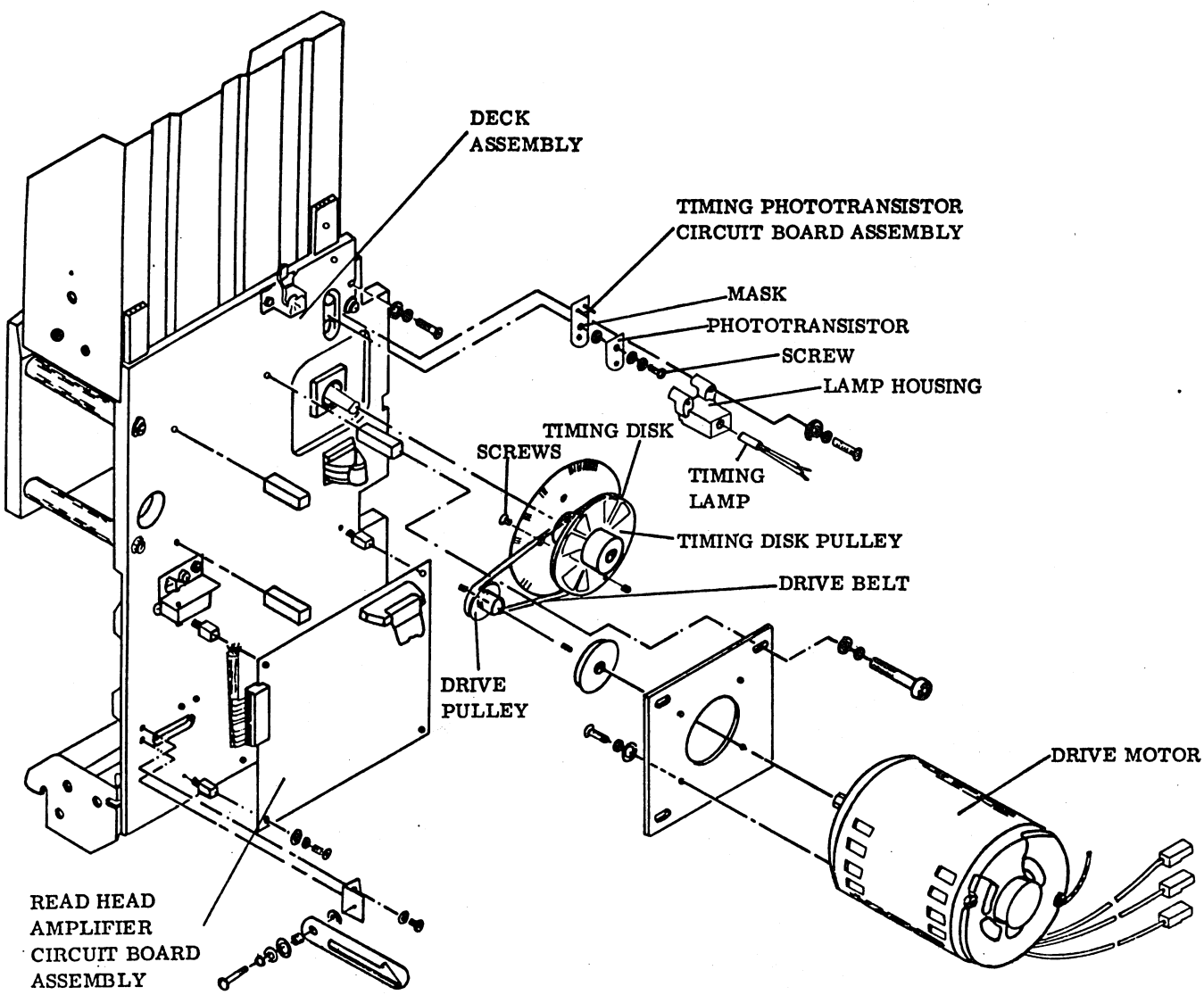

Figure 6D-42. Timing Mask/Phototransistor, Timing Deck, and Drive Belt Replacement

vertical position. Lock the assembly in the vertical position by pushing down on the slider bar at the bottom of the assembly to engage the slot in the bar.

3. Remove the old belt by lifting it away from the timing disk pulley.

4. Loop the new drive belt around the motor drive pulley. Then, starting at the upper portion of the timing disk pulley, attach the belt and manually rotate the timing disk pulley in a clockwise direction until the belt is fully engaged.

5. Ensure proper belt tension and run the card reader in off-line mode (procedure D4) to ensure that the belt is not slipping.

NOTE

If the belt is slipping, the READ CHECK indicator will illuminate, indicating an early dark error.

D31 DATA AND SYNC ERROR CORRECTION

Any time the read amplifier board or part of the timing assembly is replaced, the card reader diagnostic (CRUT1) should be run to ensure that the data is being sent to the processor correctly. The following procedure is to be used for aligning and adjusting the read circuitry.

Two board configurations are used:

- Sync test deck (figure 6D-43) buff cards
- Read adjust deck (figure 6D-44), buff cards

To load CRUT1, perform the following:

1. Verify that the card deck is sequenced as follows:

   Deck 1 – CRUT1, sections 1 and 2
   Deck 2 – Sync test deck
   Deck 3 – Read adjust deck

2. Verify that the ODS 8K monitor has been loaded and an end-of-file card has been removed from the card deck; then load the card deck as outlined in procedure D3.

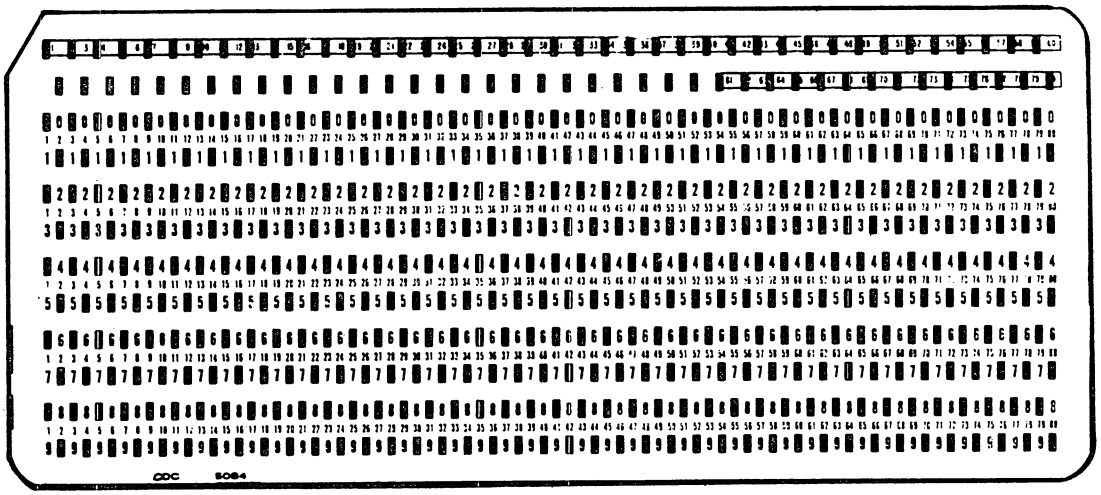

Figure 6D-43. Sync Adjust Card

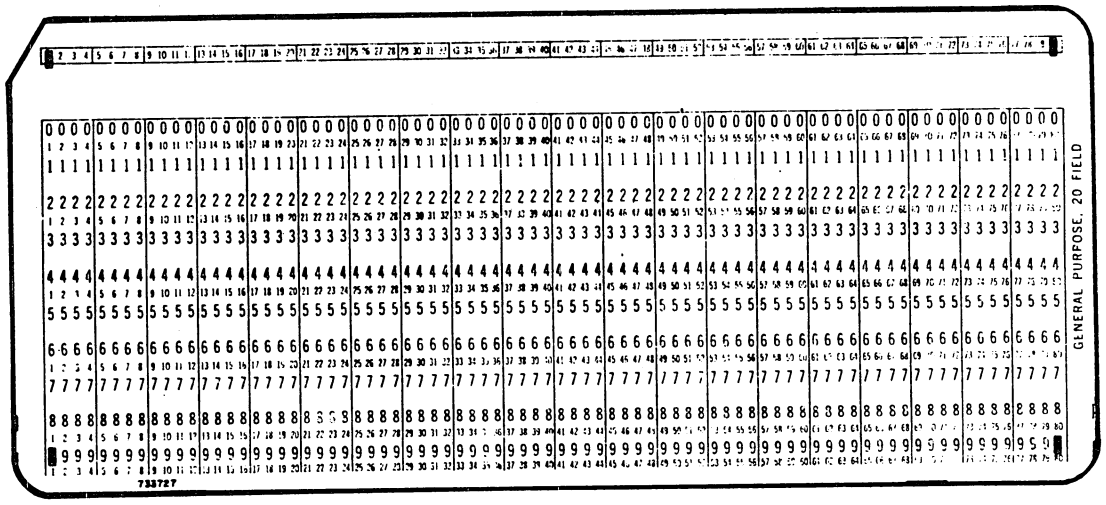

Figure 6D-44. Read Adjust Card

For sync calibration, perform the following:

1. Place decks 1 and 2 in the hopper amd make the card reader ready.

NOTE

Do not place deck 3 in the hopper.

2. At the keyboard, perform the following:

Press CONTROL and BEL simultaneously.
Type in ODS, LDGO, CRUT1
Press CARRIAGE RETURN.

CRUT1 now loads. The console displays:

LOAD SYNC ADJUSTMENT DECK

At the keyboard, perform the following:

Press CONTROL and BEL simultaneously.
Type in ODS, GO
Press CARRIAGE RETURN.

The sync test data deck is read until the hopper is empty or until an error is encountered.

NOTE

It may be desirable at times not to terminate a section when the hopper goes empty. The section can be directed to repeat itself by changing the CRUT1 control word either at the beginning of the section or at a time that an action code has been output on the console display.

To change the control word of CRUT1 so that the section repeats itself each time a hopper empty conditions arises, perform the following at the keyboard:

Press CONTROL and BEL simultaneously.
Type in ODS, CCW, CRUT1, 780
Press CARRIAGE RETURN.

Once the control word has been set to repeat a section, the section continues to run until the control word is again changed so it does not repeat the section.

To change the control word of CRUT1 so that the section does not repeat itself after a hopper empty condition arises, perform the following at the keyboard:

Press CONTROL and BEL simultaneously.
Type in ODS, CCW, CRUT1, 580
Press CARRIAGE RETURN.

3. If all cards are read without error, continue with read adjust calibration below.

4. If errors are detected, the informative error message has the form:

Row no. 12 11 0 1 2 3 4 5 6 7 8 9

1 0 0

Total Error Column

25 1-80

The meaning of the character below the row number is:

Blank	No error was found for 80 columns.
1	One column was not punched but was read as being punched.
0	One column was punched but was read as not being punched.

The total reflects the current accumulative error count from the beginning of the test deck. A maximum of one error per card is added to the error count.

5. For each informative error, check the edge of the last card in the stacker for damage. If the card damage is apparent, check the card path for obstructions; if card damage is not apparent, proceed to step 6. (Check to see if the right data card was read.)

6. Check table 6D-1 for the symptoms reported in step 5.

7. Go to the recommended procedure to eliminate this error.

For read adjust calibration, perform the following:

8. The console displays:

LOAD READ ADJUST DECK

Place deck 3 in the hopper, and make the card reader ready.

9. At the keyboard, perform the following:

Press CONTROL and BEL simultaneously (manual interrupt).
Type in ODS, GO
Press CARRIAGE RETURN.

The read adjust data check is read until the hopper goes empty (see Sync Calibration above).

10. If all cards are read without error, the procedure is complete.

TABLE 6D-1. DATA ERRORS AND FAULT ISOLATION

Error Symptoms	Example	Probable Cause/Solution	Action
Dropping random data bits any place on card	Expected FFF Received FEF Reader dropped row 5	1. Read lamp intensity is too high. 2. Amplifier card is bad (procedure D11).	Replace read head (procedure D12).
Picking up random data bits any place on card	Expected EEE Received EFE Reader picked up row 5.	1. Read lamp intensity is too low. 2. Read head amplifier card is bad (procedure D11).	Replace read head (procedure D12).
Dropping or picking up bits on outside tracks consistently (rows 9 through 12)	Expected EEE Received EEF Reader picked up row 1	1. There is a possible skew misalignment (procedure D18). 2. Amplifier card is bad (procedure D11).	Replace read head (procedure D12)
Dropping or picking up bits in any row on card, but in first 10 to 20 columns	Data error, column 13: Expected ABC Received 18F Reader is completely missing a word	Read head is too far from the drum surface. It should be 0.010 inches to 0.016 inches away from the drum (procedure D14).	
Dropping or picking up bits in any row on card, but in the last 10 columns	Data error, column 78: Expected AFC Received 18C Reader is completely missing a word.	Check to see that the output stacker motor springs are not broken or bent and that the resync switch on the control board is in the proper position.	
Dropping bits in column 80 (sync deck)	Data error, column 80:	The card is probably slipping. First check to see that the drum is not dirty (clean it according to procedure D19). Then: 1. Check feed plate (procedure D27). 2. Check the read head to drum gap (procedure D14). 3. Check that the output stacker motor springs are not bent or broken.	

TABLE 6D-1. DATA ERRORS AND FAULT ISOLATION (Contd)

Error Symptoms	Example	Probable Cause/Solution	Action
Dropping or picking up bits in any row on card but in the middle 25 columns (30 through 55)	Data error, column 47: Expected 13F Received 28A	1. Check the feed plate throw (procedure D27). 2. Check if the feed plate is reacting too soon due to a faulty or weak solenoid.	

NOTE

To terminate CRUT1, the test must be aborted in the following manner:

Remove all test data cards from the card reader. Place the end-of-file card in the hopper, press RESET at the keyboard, and perform the following:

Press CONTROL and BEL simultaneously.
Type in ODS, ABRT, CRUT1
Press CARRIAGE RETURN.

The end-of-file card will be read and the diagnostic can be reloaded according to table 6-18.

11. If errors are detected, an informative error message has this form (see Sync Calibration above):

Row No.	12	11	0	1	2	3	4	5	6	7	8	9
Error	1						0		0			

Total Error Column

25 1-80

12. For each informative error, check the last card in the stacker for damage, such as torn webs. If card damage is apparent go to procedure D27. If not, proceed to step 13 of this procedure.

13. Record several data errors (the column and bits in error) to establish a pattern. At the keyboard, perform the following to continue:

Press CONTROL and BEL simultaneously.
Type in ODS, GO
Press CARRIAGE RETURN.

14. Compare the symptoms found in step 13 with table 6D-1.

15. If the probable cause is read lamp intensity, mark the position of potentiometer R10 and proceed to step 16; otherwise, go to the procedure recommended in table 6D-1.

16. Adjust potentiometer R10 slightly off its present position, and again initiate the diagnostic. If the error remains, adjust again in the same direction. If no change in the symptom is apparent after three adjustments in one direction, return potentiometer R10 to the original position and then adjust it in the opposite direction. After three adjustments in both directions without a change in the symptom, terminate this procedure and call for support.

D32 CRUT2 INFORMATIVE TIMING ROUTINE EXECUTION

To execute the card reader CRUT2 informative timing routine, perform the following:

1. This program has been developed as an aid in detecting erratic data timing and/or card slippage problems within the card reader.

2. To load CRUT2 (ODS 8K monitor must be loaded previously):

a. Place the deck in the hopper and make the card reader ready.

b. At the keyboard perform the following:

Press CONTROL and BEL simultaneously.
Type in ODS, LDGO, CRUT2
Press CARRIAGE RETURN.

CRUT2 now loads. The console displays:

SUSPEND SELF.
CRUT2

c. At this point the CRUT2 test data deck (sync data and end of file) is ready to be input.

NOTE

At this time the operator can replace the CRUT2 data deck with any other deck as long as the end-of-deck card is placed at the end of the data deck.

d. At the keyboard, perform the following:

Press CONTROL and BEL simultaneously.
Type in ODS, GO
Press CARRIAGE RETURN.

The data deck will read until the end-of-deck card is input or until an error is detected.

e. When the end-of-deck card is detected, the following informative text is output on the console display before the routine terminates:

Delay to the first card column from a feed request:	Min.	Max.	Avg.
Feed motor			260 ms
Feed motor on	039 ms	052 ms	041 ms
Data rates after the first column	0.64 ms	0.68 ms	0.64 ms
Card cycle time	95 ms	112 ms	098 ms
Card rates (cards per minute)	534	630	612

f. Using the following table and the informative text output in step e, the customer engineer should be able to detect whether those figures output in stepe are reasonable.

Card Rates in Card Per Minute (cpm)	600 Cpm
Delay to first card column from a feed request	
First feed request (feed) motor off)	290 ms
Subsequent feed requests (feed motor on)	40 ms
Data rates after first card column	0.73 ms
Minimum card cycle time	100 ms

NOTE

CRUT2 can be run several times to establish which timing rate figures are varying in an unusual manner. Such variations can mean card slippage or a timing problem within the card reader.

CRUT2 should be run alone to get the most accurate timing data.



CONSOLE DISPLAY PROCEDURES

CONTENTS

Procedure		Page
E1	Power Turn-On	6E-1
E2	Power Turn-Off	6E-1
E3	High Voltage Transformer Removal/Replacement	6E-2
E4	+15 V dc Regulator Replacement	6E-3
E5	AC Entry Panel Replacement	6E-3
E6	TEST MODE Switch Replacement	6E-4
E7	MASTER CLEAR Switch Replacement	6E-4
E8	Logic Module Printed Circuit Board Removal/Replacement	6E-5
E9	Logic Module Card Cage Removal	6E-5
E10	Switches and Indicators Replacement	6E-5
E11	Printed Circuit Board Replacement	6E-5
E12	Video Module Replacement	6E-7
E13	Cathode-Ray Tube Replacement	6E-10
E14	Horizontal and Vertical Alignment	6E-11
E15	CRT Yoke Replacement	6E-12
E16	Vertical Choke Replacement	6E-15
E17	Bulk Power Supply Board Replacement	6E-15
E18	Keyboard Replacement	6E-16
E19	AC Entry Transformer Replacement	6E-16
E20	Video Printed-Circuit Board Voltage Measurement	6E-18
E21	Cabinet Hood Removal	6E-21
E22	Measuring Low Voltages	6E-21
E23	INTENSITY Control on Display Panel Check/Replacement	6E-22
E24	Baud Rate Switches Check/ Replacement	6E-23
E25	Keyboard Check	6E-25
E26	Monitor Adjustments	6E-27
E27	CHARACTER/LINE/BLOCK Switch Check/Replacement	6E-28
E28	Two-Position Switches Check/ Replacement	6E-28
E29	Audible Alarm Check/ Replacement	6E-29
E30	Refresh Stability Adjustment	6E-29

Figure		Page
6E-1	POWER ON/OFF Switches	6E-1
6E-2	High-Voltage Transformer Installation	6E-2
6E-3	15 V dc Regulator Assembly	6E-3
6E-4	15 V dc Regulator Transistor	6E-3
6E-5	AC Entry Panel Removal	6E-3
6E-6	TEST MODE Switch Removal	6E-4
6E-7	MASTER CLEAR Switch	6E-4
6E-8	Logic Card Cage Board Locations	6E-5
6E-9	Logic Module Card Cage Removal	6E-6
6E-10	LED and Switch Panel Removal	6E-6
6E-11	Video Module Printed-Circuit Board Replacement	6E-6
6E-12	Video Printed-Circuit Board Removal	6E-7
6E-13	Video Connector Removal	6E-8
6E-14	CRT Mounting to Bezel	6E-8
6E-15	Removing Video Module	6E-9
6E-16	Video Module Installation	6E-9
6E-17	CRT Socket Removal	6E-10
6E-18	CRT Yoke Assembly	6E-11
6E-19	Shielding Sleeve Positioning	6E-12
6E-20	Focus, Contrast, and Vertical Linearity	6E-13
6E-21	Removing Flag Terminals	6E-13
6E-22	CRT Tube Socket Removal	6E-13
6E-23	Yoke Assembly	6E-14
6E-24	Positioning Shielding Sleeve	6E-14
6E-25	Vertical Choke	6E-15
6E-26	Bulk Power Supply Board	6E-16
6E-27	Keyboard Assembly	6E-17
6E-28	AC Entry Transformer	6E-17
6E-29	Test Point for +465 V dc	6E-18
6E-30	Test Point for -190 V dc	6E-19
6E-31	Test Point for +45 V dc	6E-20
6E-32	Test Pins for +5 V dc and +15 V dc	6E-20
6E-33	+5 V dc Regulator Board Test Points	6E-21
6E-34	Memory and Processor Voltage Test Points	6E-22
6E-35	INTENSITY Control	6E-23
6E-36	High Baud Rate Set to 9600 – Low Baud Rate Set to 110	6E-23
6E-37	Setting Low Baud Rate Switches	6E-24
6E-38	Setting High Baud Rate Switches	6E-24
6E-39	Checksum Display	6E-25
6E-40	64 CHAR/96 CHAR Switch	6E-26
6E-41	Special Control Code Keys	6E-26
6E-42	Monitor Printed-Circuit Board Adjustments	6E-27
6E-43	Checking Sonalert	6E 30
6E-44	Logic Module (Switches and Adjustments)	6E-30
6E-45	Normal Raster	6E-31
6E-46	Bulk Power Supply Indicator Lights	6E-31
6E-47	15 V dc Regulator and Heat Sink	6E-32

96768683 - 01

E1 POWER TURN-ON

To turn on the console display (figure 6E-1), perform the following:

1. Check that the console display ac power cord is connected to the site power outlet.
2. Place the rear panel white circuit breaker up.
3. Press the POWER ON/OFF switch on the operator panel to ON.

E2 POWER TURN-OFF

To turn off console display power (figure 6E-1), perform the following:

1. Press the POWER ON/OFF switch to OFF.
2. Place the rear panel white circuit breaker down.

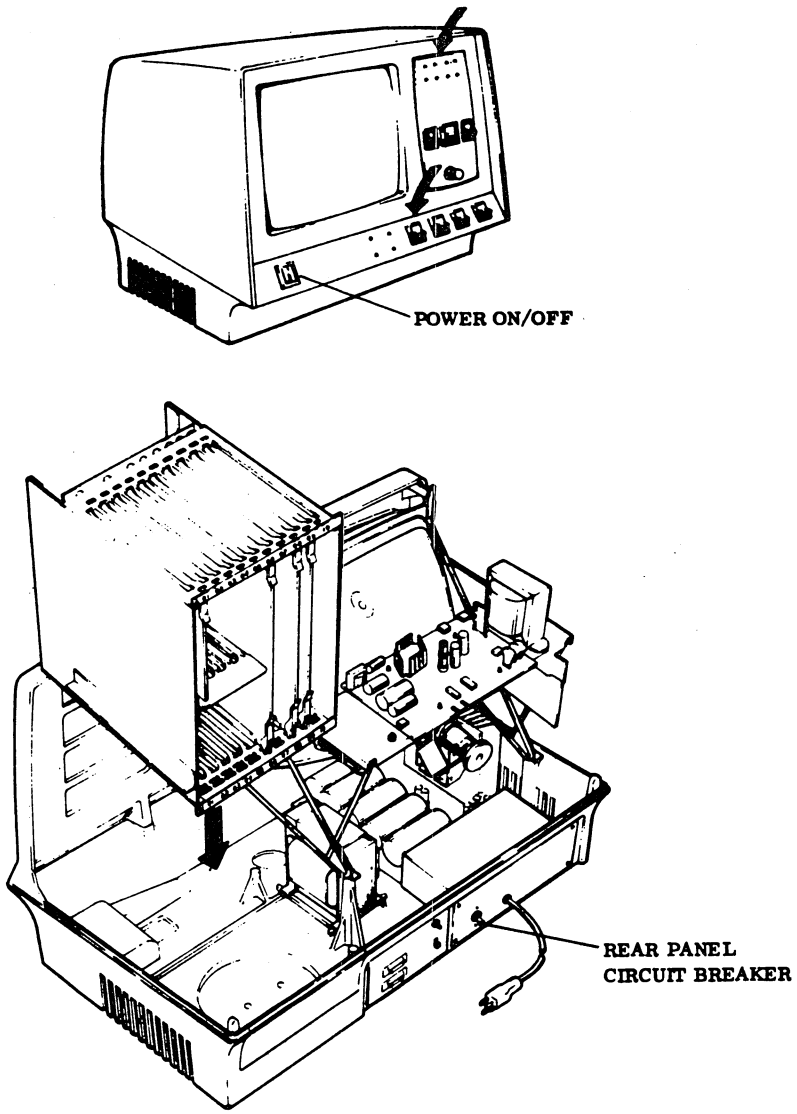

Figure 6E-1. POWER ON/OFF Switches

E3 HIGH-VOLTAGE TRANSFORMER REMOVAL/REPLACEMENT

To remove the high-voltage transformer, perform the following:

1. Turn the power off (procedure E2).
2. Disconnect the ac power cord from the site power outlet.

WARNING

Be careful not to scratch the surface of the cathode-ray tube (CRT). A scratch weakens the glass substantially and can cause the tube to implode.

3. Connect a heavily insulated wire to ground first and then, while carefully lifting the rubber anode cover, discharge the surface under the rubber cover (including the anode terminal end) by sliding the end of the grounded wire under the rubber cover and into the anode hole of the cathode-ray tube.
4. Remove the high-voltage lead by raising the rubber cover and gently compressing the springloaded anode lead.
5. Remove the two hex nuts that hold the transformer to the chassis and carefully withdraw the transformer from the video module.
6. Unsolder the wires from the transformer. Identify the wires according to their pin numbers (figure 6E-2).

To replace the transformer, perform the following:

7. Solder the transformer wires.
8. Connect the transformer to the chassis (figure 6E-2).
9. Connect the high-voltage lead to the anode of the cathode-ray tube.

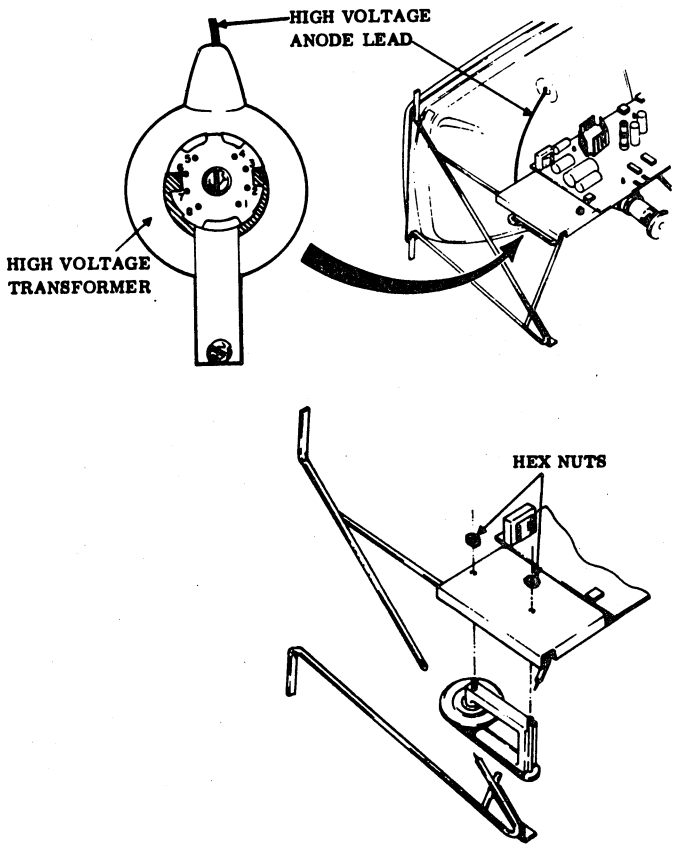

Figure 6E-2. High-Voltage Transformer Installation

E4 +15 V DC REGULATORS REPLACEMENT

To remove the +15 V dc regulators mounted on the side of video module (figure 6E-3), perform the following:

1. Remove the bad transistor by unscrewing the screw that holds it to the heat sink and pulling the transistor firmly from the socket.

To replace the +15 V dc regulator, perform the following:

2. Cut the center pin (C) of the new transistor flush with the case (figure 6E-4).

3. Clean the surface of the heat sink where the transistor makes contact and apply new thermal compound (part number 94657900).

4. Bend the remaining pins (B and E) at right angles so they fit into the socket and still allow the transistor to be fastened with the mounting screw.

5. Plug the transistor in the socket and fasten with the screw.

6. With the J2 connector removed, test the output of emitter-to-ground for +15 V dc (after turning the power on). If the output is not ±15 V dc, replace the transistor and try again. If +15 V dc is found, go to step 7.

7. With the power off, replace the J2 connector and then test the emitter again for +15 V dc (with the power on).

8. If the voltage drops down significantly when J2 is connected, replace the printed-circuit board (procedure E12).

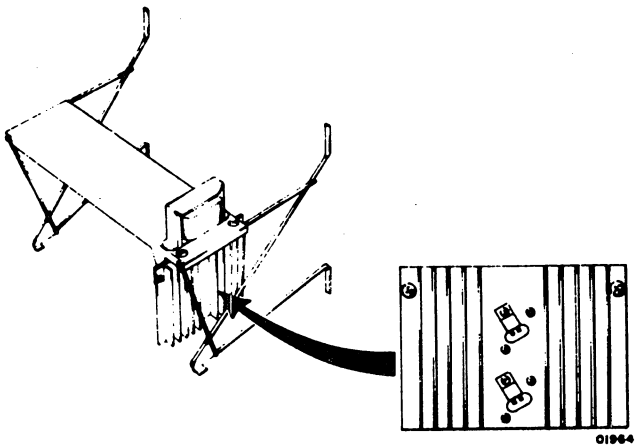

Figure 6E-3. 15 V dc Regulator Assembly

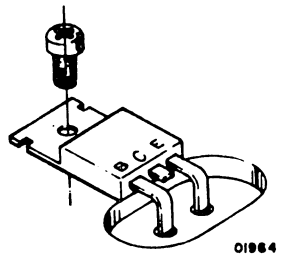

1. CUT COLLECTOR
2. BEND BASE AND EMITTER FOR INSERTION INTO SOCKET

Figure 6E-4. 15 V dc Regulator Transistor

E5 AC ENTRY PANEL REPLACEMENT

To remove the ac power panel assembly (figure 6E-5), perform the following:

1. Turn the power on (procedure E1).

2. Pull the ac plug from the site power outlet.

3. Remove the grounding wires connected to terminals E2, E3, and E4.

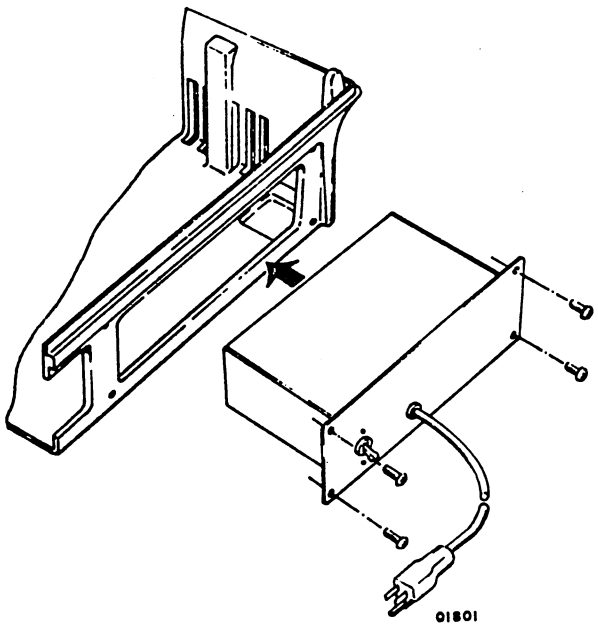

Figure 6E-5. AC Entry Panel Removal

4. Disconnect the connector leading to the POWER ON/OFF switch.

5. Disconnect the connector leading to the transformer and bulk power supply.

6. Remove the four screws that anchor the panel box to the cabinet chassis.

7. Withdraw the entire ac power panel and its connectors from the console display cabinet.

To install the ac entry panel, perform the following:

8. Feed the connectors through the chassis hole and insert the ac power panel (box) into the chassis compartment.

9. Fasten the four screws (figure 6E-5).

10. Attach the grounding wires to E2, E3, and E4.

11. Connect the cable connectors. The small one goes to the POWER ON/OFF switch while the large one leads to the bulk power supply.

E6 TEST MODE SWITCH REPLACEMENT

To remove the TEST MODE switch, perform the following:

1. Remove the data cables from the rear data entry panel.

2. Remove the four mounting screws that hold the panel to the chassis (figure 6E-6).

3. Remove the TEST MODE switch (the slide switch below the MASTER CLEAR pushbutton switch) from the panel by unscrewing the two screws holding the switch to the panel.

4. Unsolder the wires and identify them so they can be replaced correctly.

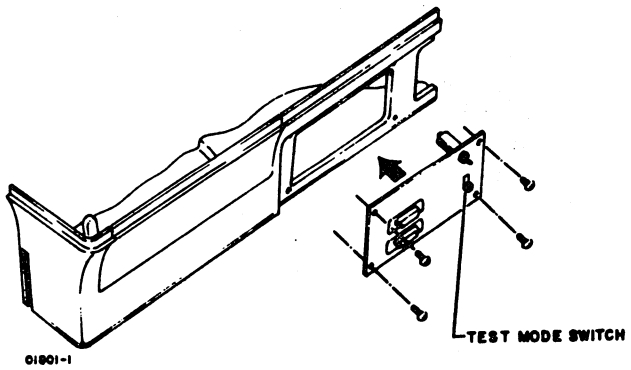

Figure 6E-6. TEST MODE Switch Removal

To replace the TEST MODE switch, perform the following:

5. Solder the wires to the pins of the new TEST MODE switch in the same arrangement as they were removed.

6. Attach the panel to the chassis with four mounting screws.

7. Attach the switch to the panel with two mounting screws.

E7 MASTER CLEAR SWITCH REPLACEMENT

To remove the MASTER CLEAR switch, perform the following:

1. Unscrew the four mounting screws holding the data entry panel to the chassis (figure 6E-7).

2. Unscrew the hex nut holding the MASTER CLEAR switch to the panel.

3. Unsolder the wires and identify them so they can be replaced correctly.

To replace the MASTER CLEAR switch, perform the following:

4. Solder the wires to the switch pins. Attach the black wire to the center pin.

5. Insert the switch into the panel and attach it with the hex nut.

6. Attach the panel to the chassis using the four mounting screws (figure 6E-7).

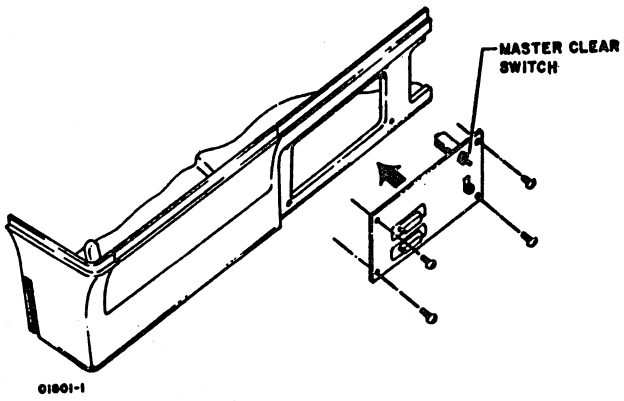

Figure 6E-7. MASTER CLEAR Switch

E8 LOGIC MODULE PRINTED CIRCUIT BOARD REMOVAL/REPLACEMENT

To remove the boards from the card cage, perform the following:

1. Press the POWER ON/OFF switch to OFF.
2. Remove the two screws holding the cabinet hood to the chassis and remove the cabinet hood.
3. Release the friction clamp arms holding the board in place.
4. Withdraw the board from the card cage.

To replace the boards in the card cage, perform the following:

5. Turn the power off by pressing the POWER ON/OFF switch to OFF.
6. If the board contains switches, check and set up according to terminal application requirements.
7. Place the board in the correct location (figure 6E-8) and slide the board in the track until it is touching the socket at the end of the track.
8. Carefully draw the board into the socket by locking the friction clamps.

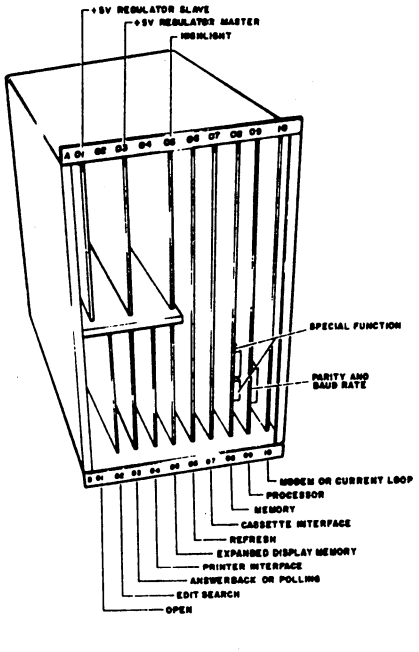

Figure 6E-8. Logic Card Cage Board Locations

E9 LOGIC MODULE CARD CAGE REMOVAL

To remove the logic module card cage, perform the following:

1. Press the POWER ON/OFF switch to OFF.
2. Remove the four mounting screws, using a 5/16-inch socket and a 19-inch by 1/4-inch drive extension.
3. Carefully lift the card cage upward and to the rear sufficiently to disconnect the connectors mounted on the bezel side of the card cage. When the cage is back far enough, disconnect the cables and remove the card cage (figure 6E-9).

To replace the logic module card cage, reverse the preceding steps.

E10 SWITCHES AND INDICATORS REPLACEMENT

To remove an indicator or switch on the front panel, perform the following:

1. Press the POWER ON/OFF switch to OFF.
2. Separate the panel from the bezel by inserting fingers under the panel and carefully prying the panel from the bezel chassis (see arrows in figure 6E-10).
3. Disconnect all wires from the indicator board or switch by pulling the terminals. Identify the wires.

Replace the entire LED board with a new board by reversing the above procedure.

E11 PRINTED CIRCUIT BOARD REPLACEMENT

To remove the video printed-circuit board, perform the following:

1. Remove power by placing the POWER ON/OFF switch in the OFF position.
2. Disconnect the BP1 connector (figure 6E-11).
3. Remove ground strap BJ7 from the board.
4. Disconnect connector BJ6 from the board.
5. Disconnect connector BP4.
6. Position the vinyl cylinder on the mounting peg and release the friction clips by pressing downward. Repeat for all four pegs. After the printed-circuit board is released from all four pegs, lfit the board to remove it from the video module (figure 6E-11).

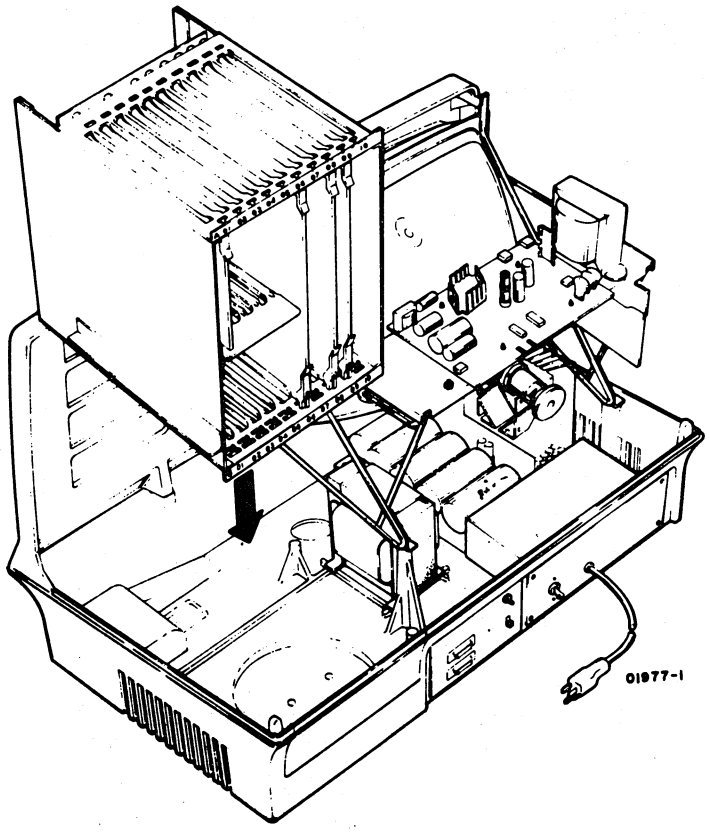

Figure 6E-9. Logic Module Card Cage Removal

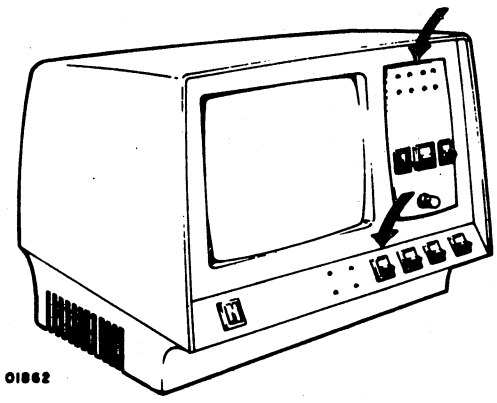

Figure 6E-10. LED and Switch Panel Removal

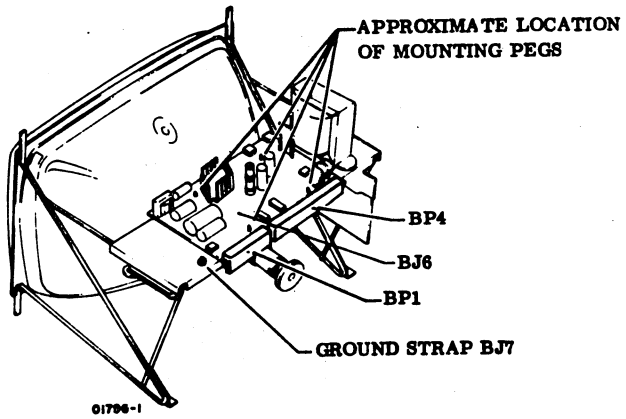

Figure 6E-11. Video Module Printed-Circuit Board Replacement

7. Install the new printed-circuit board by positioning it over the mounting pegs (match the holes on the printed-circuit board with the pegs) and gently press the board down into position (figure 6E-12) so that the friction clips on the pegs pass through the holes sufficiently to lock the board in place.

8. Replace the connectors and the ground strap.

E12 VIDEO MODULE REPLACEMENT

To remove the video module, perform the following:

1. Press the POWER ON/OFF switch to OFF and disconnect the ac power cord.

2. Disconnect the BP1 connector at J1 (the smallest connector on the video printed-circuit board).

3. Disconnect connector BP5 leading to the +15 V dc regulators that are mounted vertically on the large heat sink on the side of the video module (figure 6E-13).

4. Disconnect connectors BP2 and BP3. Disconnect the ground wire from E1 on the video board.

5. Remove the six hex screws with a 1/4-inch socket and extension (figure 6E-14).

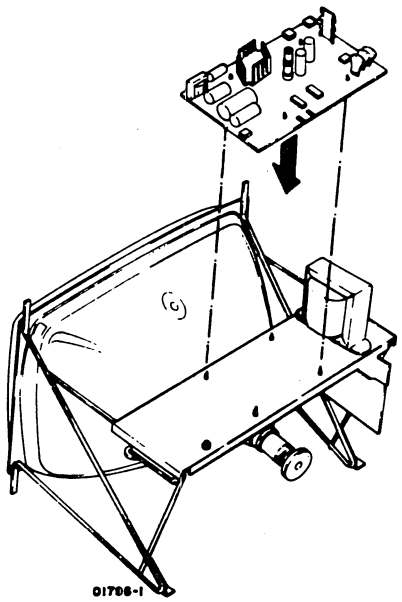

Figure 6E-12. Video Printed-Circuit Board Removal

WARNING

Use extreme care when handling the TV module. Rough handling can cause the CRT to implode with tremendous force resulting in severe injury. Do not nick or scratch the glass or subject it to any undue pressure during replacement. When handling the CRT, always wear safety goggles and heavy gloves for protection.

6. Grasp the video module by the mounting frames with both hands and carefully withdraw the entire module from the cabinet (figure 6E-15). Check to see that the neck of the CRT or mounting frame is not caught on the cabling.

To install the video module, perform the following:

7. Insert the left bottom hex screw nearest the logic module card cage into the mounting support on the bezel (figure 6E-16).

8. With the video module in both hands, lower the module into the cabinet until the slotted support in front fits over the screw inserted in the mounting (step 1).

9. Carefully steady the module with one hand and insert the top left and top right screws with the other hand; then insert the remaining bezel screw.

10. Tighten the two top screws using a 1/4-inch socket. Do not overtighten.

11. Insert the two cabinet screws that hold the back of the module in place. Do not overtighten.

12. Tighten the lower left hex screw using an 18-inch extension with a 1/4-inch socket. Do not overtighten.

13. Tighten the remaining screws so they are snug.

14. Connect the printed-circuit board BP1 connector and plug in the connector from the logic module back panel to the +15 V dc regulator connector. Connect BP2, BP3, and the ground wire to E1.

15. Check that all other connectors (tube socket, J2, and transformer lead into anode) are plugged in or attached correctly.

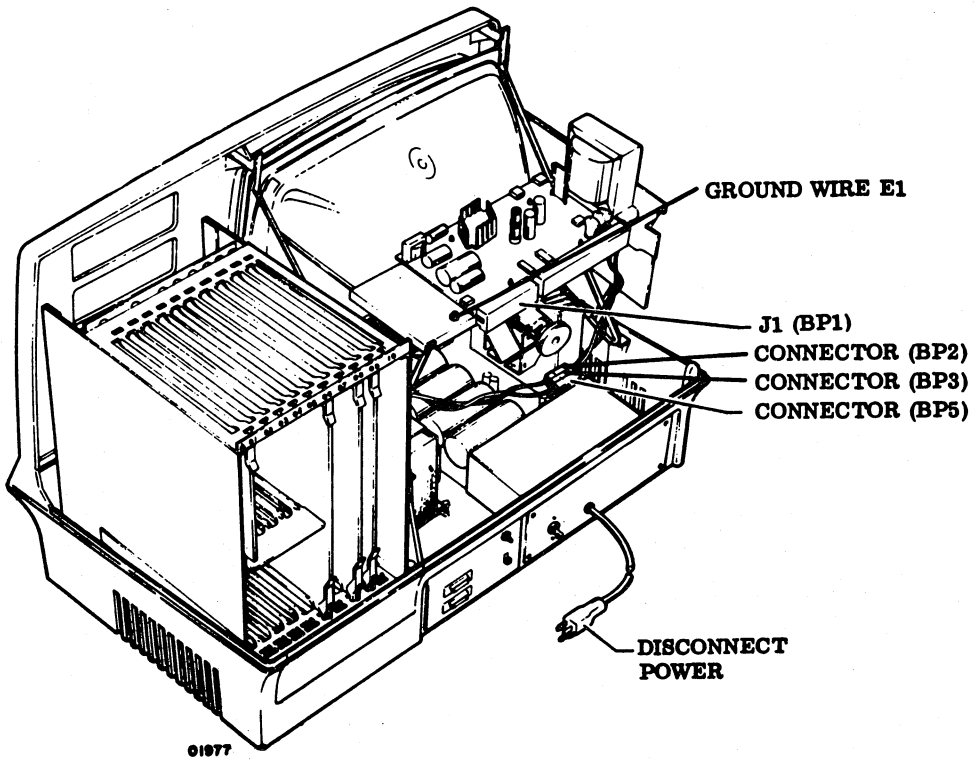

Figure 6E-13. Video Connector Removal

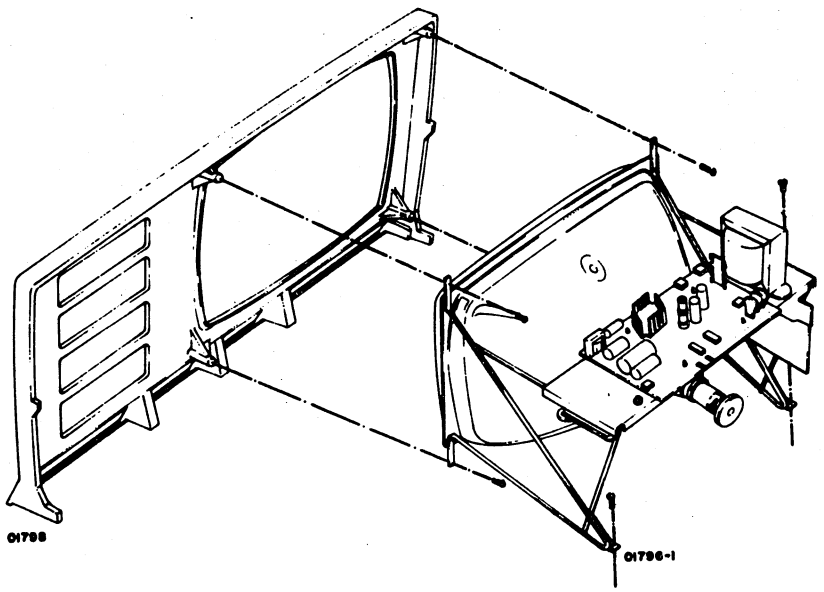

Figure 6E-14. CRT Mounting to Bezel

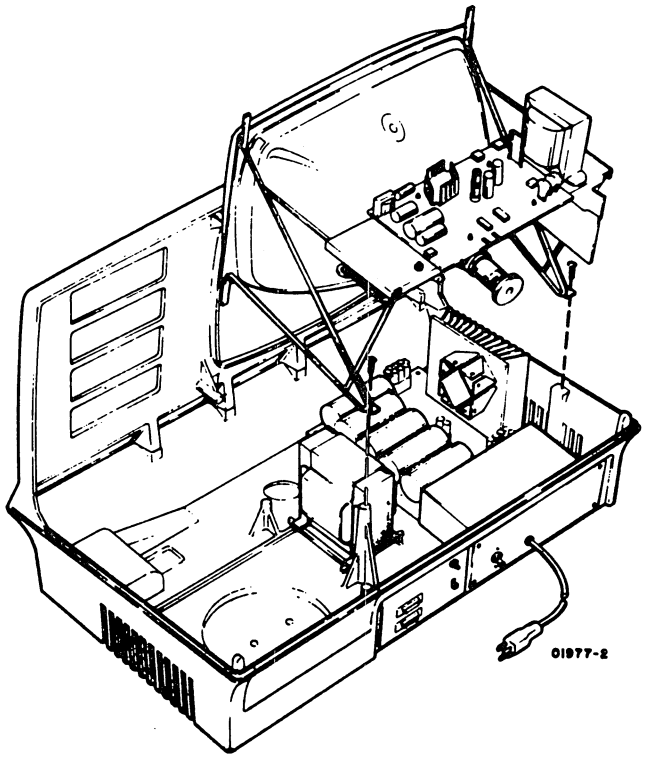

Figure 6E-15. Removing Video Module

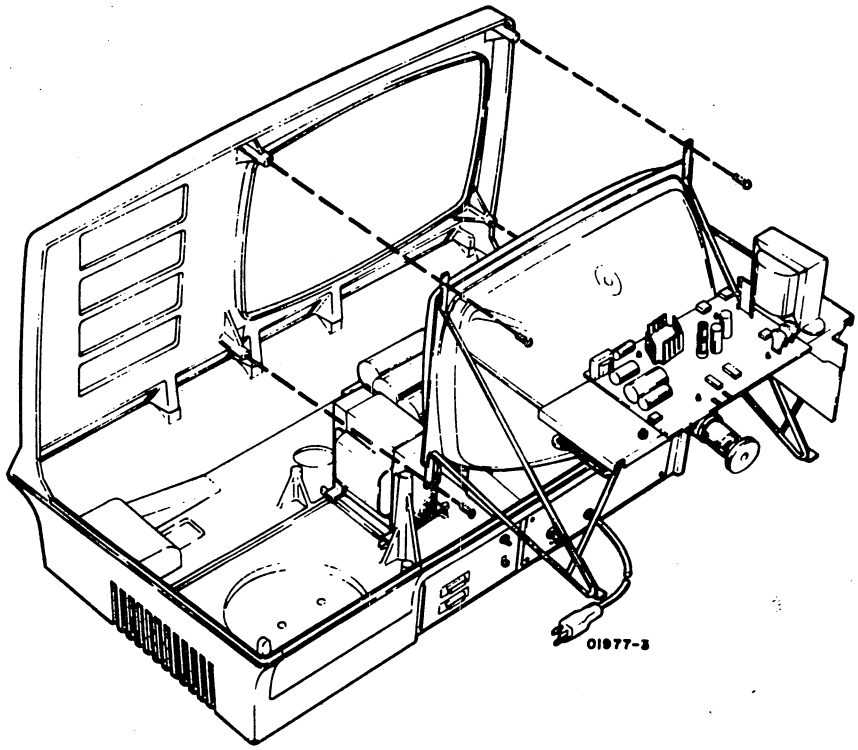

Figure 6E-16. Video Module Installation

E13 CATHODE-RAY TUBE REPLACEMENT

To replace the CRT, perform the following:

1. Press the POWER ON/OFF switch to OFF and disconnect the ac power cord from the site power outlet.

2. Refer to procedure E3 and perform steps 1, 2, and 3.

3. Remove the video module from the cabinet (see procedure E12, steps 1 through 6).

4. Disconnect the CRT tube socket carefully from the end of the neck of the CRT (figure 6E-17). Do not remove the vinyl keyguide, which should be in position over the end of the tube for protection when the socket is removed. During installation, the keyguide assures that the socket is correctly positioned.

WARNING

Use extreme care when handling the TV module. Rough handling can cause the CRT to implode with tremendous force resulting in severe injury. Do not nick or scratch the glass or subject it to any undue pressure during replacement. When handling the CRT, always wear safety goggles and heavy gloves for protection.

5. Using a screwdriver, loosen the clamp that holds the yoke in place (figure 6E-18).

6. After the screw is loosened, gently slide the yoke and shielding sleeve (which is between the neck and yoke) back on the CRT neck to ensure it is loose enough for later removal.

7. Remove the four Phillips-head screws that hold the CRT mounting plate to the video module chassis, being careful that the CRT does not slip or fall when the last screws are removed.

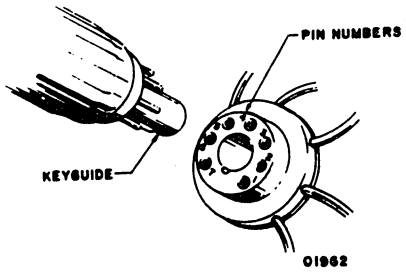

Figure 6E-17. CRT Socket Removal

WARNING

Never allow the CRT to rest on or to be supported by its neck.

8. Support the CRT neck with one hand and carefully remove the yoke with the other hand.

9. Withdraw the CRT carefully from the wire chassis of the video module. Place the CRT face down on a clean soft, clothcovered stable surface (bench) with the neck of the CRT pointing upward.

10. Remove the replacement CRT from the shipping carton and place it on a clean flat, soft, cloth-covered surface face down with the neck pointing upward.

11. Place the bad tube carefully into the shipping carton and secure it for shipment.

12. Without resting the CRT on its neck, position the CRT for mounting on the video module chassis (the neck is carefully inserted into the chassis frame to the vicinity of the yoke).

13. Fasten the CRT mounting plate to the wire chassis with four Phillips-head screws.

14. Position the shielding sleeve (figure 6E-18) on the neck of the CRT with one hand and slip the yoke over the neck and slide it forward over the sleeve. The sleeve should stick out from the back of the yoke when the yoke is positioned forward.

15 Slip the clamp over the back tabs of the yoke and tighten the screws slightly.

16. Ensure that the keyguide is in place over the pins on the end of the CRT (figures 6E-17 and 6E-18).

17. Carefully position the tube socket over the end of the CRT and gently push the socket into place so the pins enter the socket without bending.

18. Install the video module into the console display. Refer to steps 6 through 14, procedure E12.

19. Before power is applied to the device, insert the high-voltage lead from the high-voltage transformer into the CRT anode

20. Check that the connectors are attached correctly to BJ1 and BJ4 of the video module printed-circuit board.

21. Perform horizontal and vertical alignment (procedure E14).

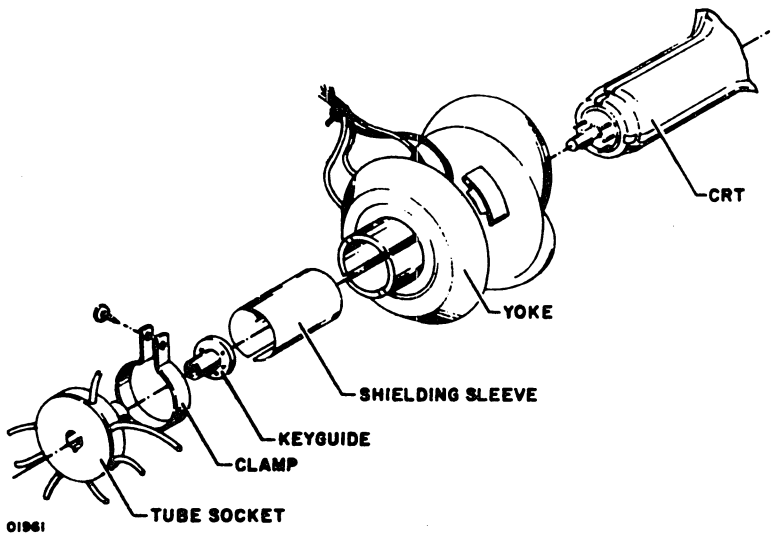

Figure 6E-18. CRT Yoke Assembly

E14 HORIZONTAL AND VERTICAL ALIGNMENT

To align the display, perform the following:

1. If this alignment is the result of the yoke having been removed or a new CRT installed, check that the high-voltage lead was reinstalled, the printed-circuit board connectors are reconnected, and the plug from the +15 V dc regulators is attached to the socket from the logic module.

2. Connect the ac power cord and turn the power on by pressing the POWER ON/OFF switch to the ON position.

WARNING

With the power applied, severe shock will be received if the high-voltage transformer of the lead to the anode or the area of the anode on the CRT is touched. Be careful when the following procedures are performed not to touch anything higher than the yoke. Keep tools out of the area while positioning the yoke.

3. Position the ON LINE/LOCAL switch to LOCAL.

4. Position the TEST/NORMAL switch to NORMAL.

5. Press MASTER CLEAR (pushbutton on the rear data entry panel).

6. Enter a full display of H characters by momentarily pressing the H character key while pressing the REPEAT key. Hold the REPEAT key down. If the H character display is not obtained, proceed to table 6-2.

7. Check if the raster of H characters is centered correctly on the screen. If not, turn off the power and proceed to step 8. If the raster is centered, go directly to step 11.

8. Turn the power off and loosen the clamp screw that holds the yoke in position on the neck of the CRT.

9. Turn the power on. Enter a full raster of H characters.

10. If the raster of H characters is tilted, rotate the yoke until it is straight. Centering is performed by rotating the centering rings located on the rear of the yoke assembly.

11. Observe the raster of H characters on the screen. Are the H characters in the leftmost column and rightmost column aligned correctly and of sufficient vertical height (similar to H characters in the center of the screen)? If not, go to step 12; if the H characters are of sufficient height on the top and bottom, go to step 13.

12. Check that the shielding sleeve between the yoke and the neck of the CRT is in place approximately as shown in figure 6E-19. If the shielding sleeve is not correctly positioned, the left side of screen is distorted while the right side is not, or the right side of the screen is distorted while the left is not. Pushing the shielding sleeve inward toward the yoke has the effect of distorting the left portion of the screen; if pushed all the way forward, the entire left half of the screen is blacked out.

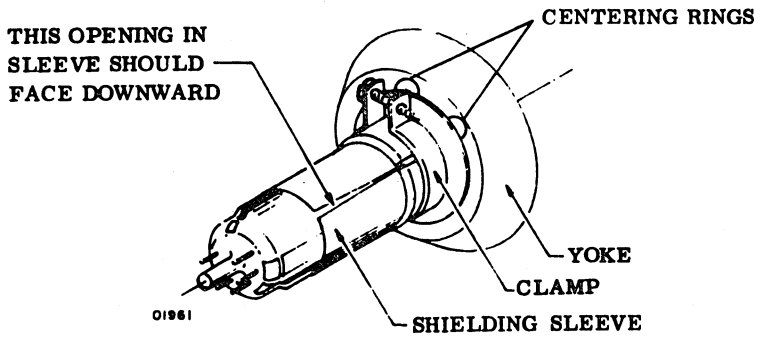

Figure 6E-19. Shielding Sleeve Positioning

If the characters on the screen are not uniformly distorted on one side as opposed to the other side, but instead, H characters are compressed on the top and not the bottom, or characters are compressed on the bottom and not the top, the problem is in the adjustment of the vertical linearity potentiometer (figure 6E-20). If vertical linearity cannot be improved by adjusting the vertical linearity potentiometer, replace the vertical choke and try to adjust it again. (See procedure E16 for vertical choke replacement procedures.)

13. After the yoke and shielding sleeve are correctly adjusted, carefully position the clamp over the tabs of the yoke and, without using force, tighten the clamp screw until the clamp is snug over the tabs and neck of the CRT.

14. Perform the video (data character) adjustments (procedure E26).

E15 CRT YOKE REPLACEMENT

To remove the yoke from the neck of the CRT, perform the following:

1. Press the POWER ON/OFF switch to OFF.

2. Disconnect the ac power cord from the site power outlet.

WARNING

Use extreme care when handling the TV module. Rough handling can cause the CRT to implode with tremendous force resulting in severe injury. Do not nick or scratch the glass or subject it to any undue pressure during replacement. When handling the CRT, always wear safety goggles and heavy gloves for protection.

3. Connect the heavily insulated wire to ground first and then, while carefully lifting the rubber anode cover, discharge the surface under the rubber cover (including the anode terminal end) by sliding the end of the grounded wire under the rubber cover and into the anode hole of the CRT.

4. Pull connector BP4 off the edge of the video printed-circuit board. Connector BP4 is the largest connector with wires leading to the yoke (figure 6E-21).

5. Disconnect flag terminals 9, 10, 18, and 19 from connector BP4 (four wires leading to the yoke) by inserting the small end of a paper clip into the top of the connector in the space available between the flag terminal and insulation (figure 6E-21) and then pulling the wire gently out from the bottom of the connector. (The flag terminal end has a wedge-type spring clip which, when released by a paper clip, permits the flag terminal to be withdrawn with the wire from the connector.)

6. Pull the CRT tube socket carefully off the end of the CRT (figure 6E-22). Do not remove the vinyl keyguide.

7. Loosen the clamp that holds the yoke in place with a screwdriver (figure 6E-23).

8. After the screw is loosened, gently slide the yoke and shielding sleeve (which is between the CRT neck and yoke) back on the CRT neck until the yoke can be removed from the device.

WARNING

Never tighten the clamp that holds the yoke on the neck of the CRT more than enough to hold the yoke in place. If tightened excessively, it is possible to break the neck of the CRT. Wear safety goggles and heavy gloves for protection.

9. Position the sleeve approximately as shown in figure 6E-24, but with the opening straight down.

10. Position the yoke over the sleeve with the wires downward.

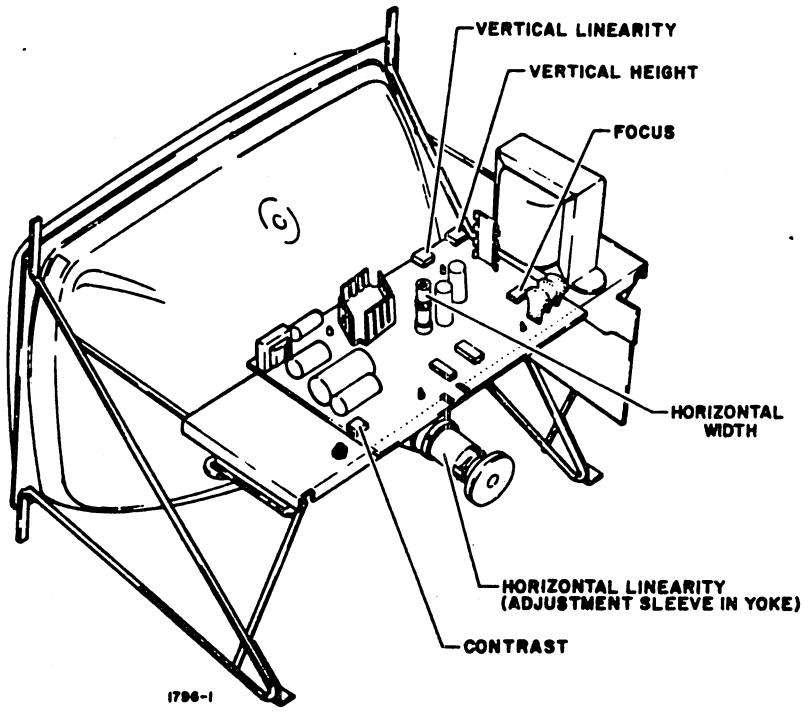

Figure 6E-20. Focus, Contrast, and Vertical Linearity

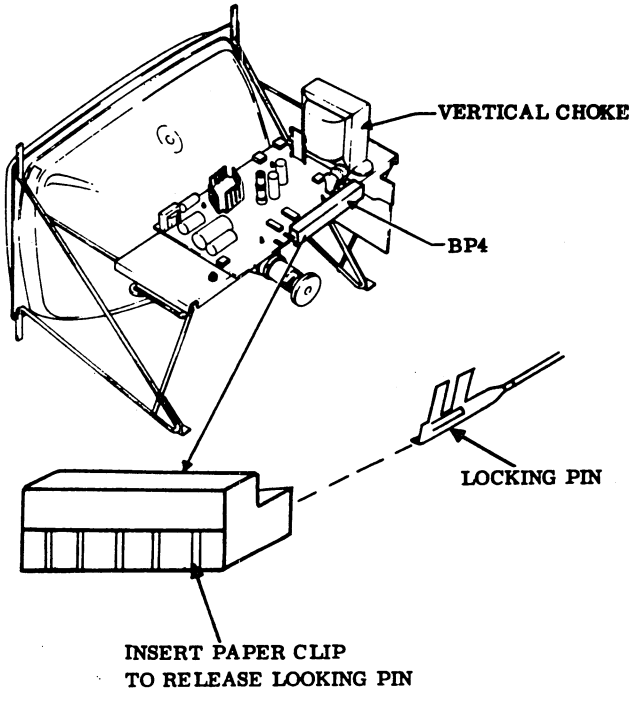

Figure 6E-21. Removing Flag Terminals

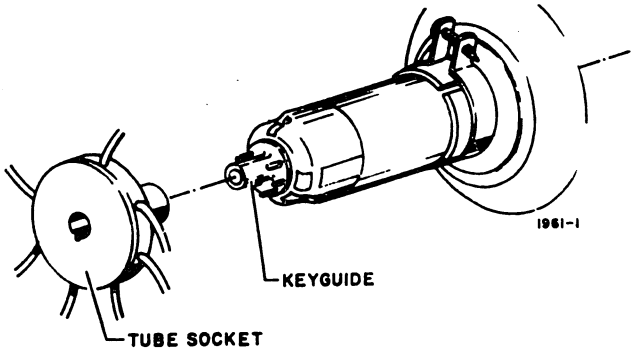

Figure 6E-22. CRT Tube Socket Removal

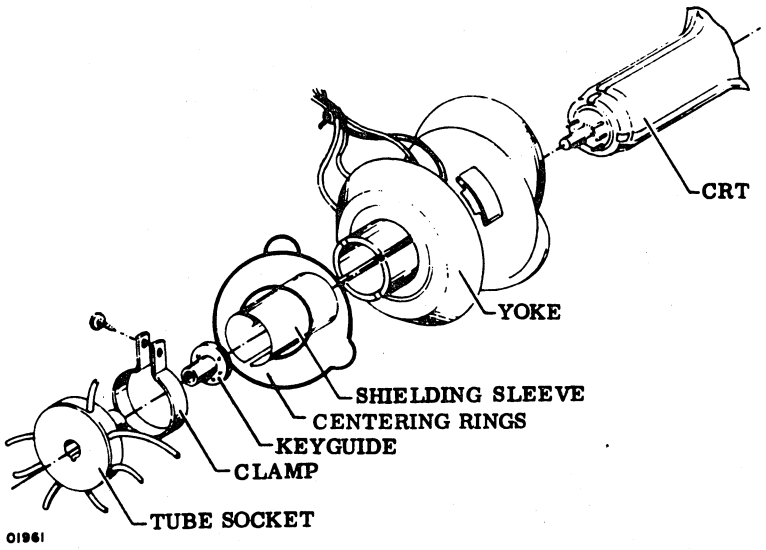

Figure 6E-23. Yoke Assembly

11. Position the clamp over the end tabs of the yoke and tighten slightly.

12. Plug the CRT tube socket carefully onto the pins of the CRT, making sure the guide matches the slot in the socket.

13. Insert flag terminals into the BP4 connector:

    a. Push the brown wire terminal into the slot (pin location 9) until the wedge-like clip locks itself in place.

    b. Push the yellow wire into slot 10.

    c. Push the red wire into slot 18.

    d. Push the blue wire into slot 19.

14. Plug connector BP4 onto the edge of the video printed-circuit board.

15. Plug the ac power cord into the site power outlet.

16. Press the POWER ON/OFF switch to ON.

17. Check to see that the TEST/NORMAL switch on the rear panel is in the NORMAL position.

18. Check that the circuit breaker on the rear panel is up.

19. Check to see that the ON LINE/LOCAL switch is at the LOCAL position.

20. Wait 30 seconds.

21. The cursor should appear in the upper-left portion of the display. If not, go to table 6-2. After the cursor appears, go to step 22.

22. Press the REPEAT key and hold it down.

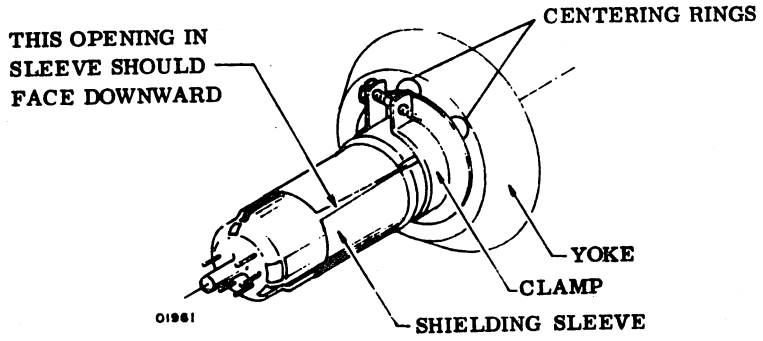

Figure 6E-24. Positioning Shielding Sleeve

23. Press the H character key momentarily while holding the REPEAT key down. H characters fill the entire screen.

24. Release the REPEAT key after the screen is full.

25. Is the display tilted to the right or left? If it is, carefully grasp the yoke and rotate it slightly. If the clamp is too tight, loosen the clamp screw. Rotate the yoke in both directions around the neck of the CRT until the picture is centered.

26. Are the left and right edges of the display visible on the screen? If not, move the sleeve under the yoke forward and backward slightly until a full display appears on the screen. Use the centering rings to center the picture on screen.

WARNING

Do not overtighten the clamp on the CRT.

27. Tighten the screw on the CRT clamp so the yoke cannot move.

E16 VERTICAL CHOKE REPLACEMENT

To replace the vertical choke (figure 6E-25), perform the following:

1. Press the POWER ON/OFF switch to OFF.

2. Disconnect BP4, the longest connector on the video printed-circuit board. Connector BP4 is on the printed-circuit board next to the vertical choke and has two flag terminals (pins 6 and 7) attached to the wires leading to the vertical choke.

3. Remove flag terminals 6 and 7 by inserting the end of a small paper clip in the space provided between the installed flag terminal and the connector insulation. A paper clip releases the wedge-like friction lock on the terminal and permits the entire terminal to be removed from the bottom of the connector.

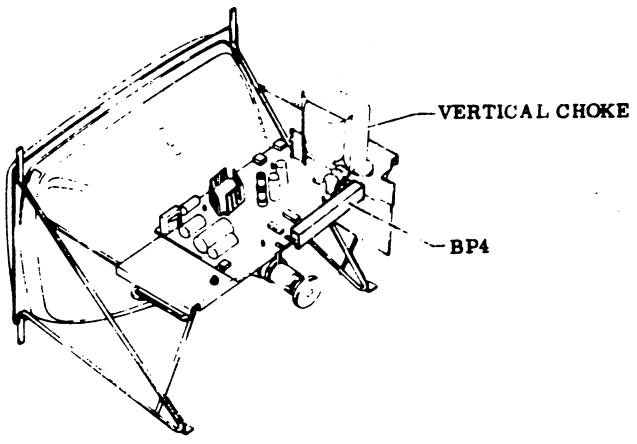

Figure 6E-25. Vertical Choke

4. Remove the two hex nuts holding the vertical choke to the chassis.

5. Lift the grounding wire from the rear mounting screw, but do not remove it from the printed-circuit board.

6. Lift the vertical choke from the chassis.

7. Position the new choke in place over the two mounting screws so the two wires are on the side nearest the printed-circuit board.

8. Connect the grounding wire to the rear mounting screw and fasten it with a hex nut.

9. Fasten the other hex nut to the front screw.

10. Insert the flag terminals into slots 6 and 7 of connector BP4 until the wires are locked and secured.

11. Connect connector BP4 to the printed-circuit board.

12. Press the POWER ON/OFF switch to ON.

13. Go to table 6-2.

E17 BULK POWER SUPPLY BOARD REPLACEMENT

To replace the bulk power supply board, perform the following:

1. Press the POWER ON/OFF switch to OFF.

2. Disconnect the ac power cord from the site power outlet.

3. Remove the cabinet hood by removing the two screws in the rear of the cabinet.

4. Remove the video module (procedure E12).

5. Disconnect the J1 and J3 connectors (figure 6E-26) from the bulk power supply board.

6. Disconnect the two wires leading from J1 to the power transistor heat sink by pulling the quick disconnect terminals from the slide terminals at the heat sink.

7. Remove the four hex screws holding the board to the chassis at the corners of the board.

8. Lift the entire assembly out of the chassis.

To replace the bulk power supply board, perform the following:

9. Place the new board on the mounting pegs and fasten it with four mounting hex screws.

10. Plug the J1 and J3 connectors into the sockets (figure 6E-26).

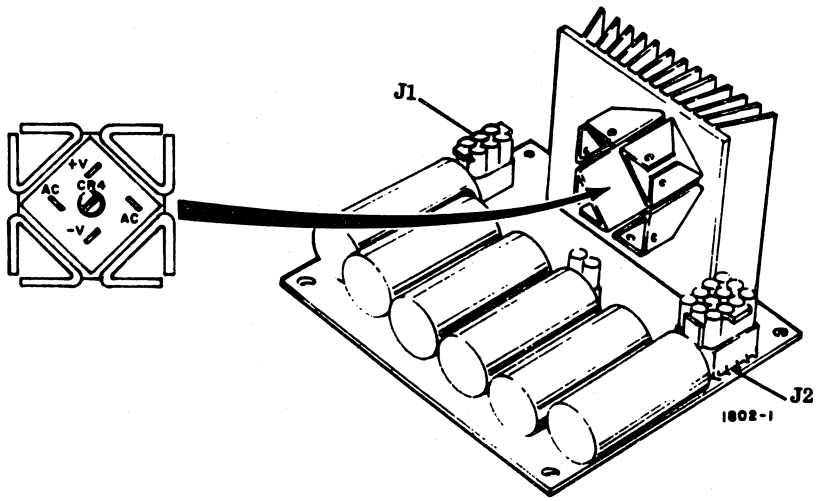

Figure 6E-26. Bulk Power Supply Board

11. Connect the two ac wires to the heat sink terminal pins (two wires from J1).

12. Replace the video module (procedure E12).

13. Press the POWER ON/OFF switch to ON and go to table 6-2.

E18 KEYBOARD REPLACEMENT

To replace the keyboard, perform the following:

1. Press the POWER ON/OFF switch to OFF.

2. If the display keyboard is attached to the main chassis, lift the chassis sufficiently to slide the keyboard out of the attached position.

CAUTION

If it is necessary to remove the keyboard by lifting up the main chassis, be careful not to allow the chassis to fall backward.

3. Loosen the two captive fasteners that hold the keyboard data entry cable connector in the display chassis socket at the lower right front side of the console display chassis.

4. Disconnect the keyboard assembly from the display by gently pulling the data entry cable out of the display chassis socket.

5. Turn the keyboard assembly over and remove the six screws holding the keyboard cover to the keyboard chassis.

6. Return the keyboard to the keys-up position and lfit the cover off (figure 6E-27).

7. Remove the cable connector from the edge of the printed-circuit board.

8. Remove the two screws that hold the printed-circuit board and mask to the chassis on one end, loosen the other two on the other slotted end, and lift out the printed-circuit board.

9. Start installing the new keyboard by placing the mask over the new printed-circuit board and position both over the four mounting screws in the keyboard chassis.

10. Insert and fasten the four screws that secure the printed-circuit board to the chassis.

11. Attach the connector to the printed-circuit board.

12. Place the cover over the assembly.

13. Holding the cover in place, turn the assembly over and insert the six screws into the bottom of the chassis.

14. Complete installing the new keyboard by performing steps 4, 3, and 2 in reverse order.

E19 AC ENTRY TRANSFORMER REPLACEMENT

To replace the transformer (figure 6E-28), perform the following:

1. Press the POWER ON/OFF switch to OFF.

2. Remove the cabinet hood by removing the two screws at the rear of the cabinet and sliding the cabinet to the rear and up.

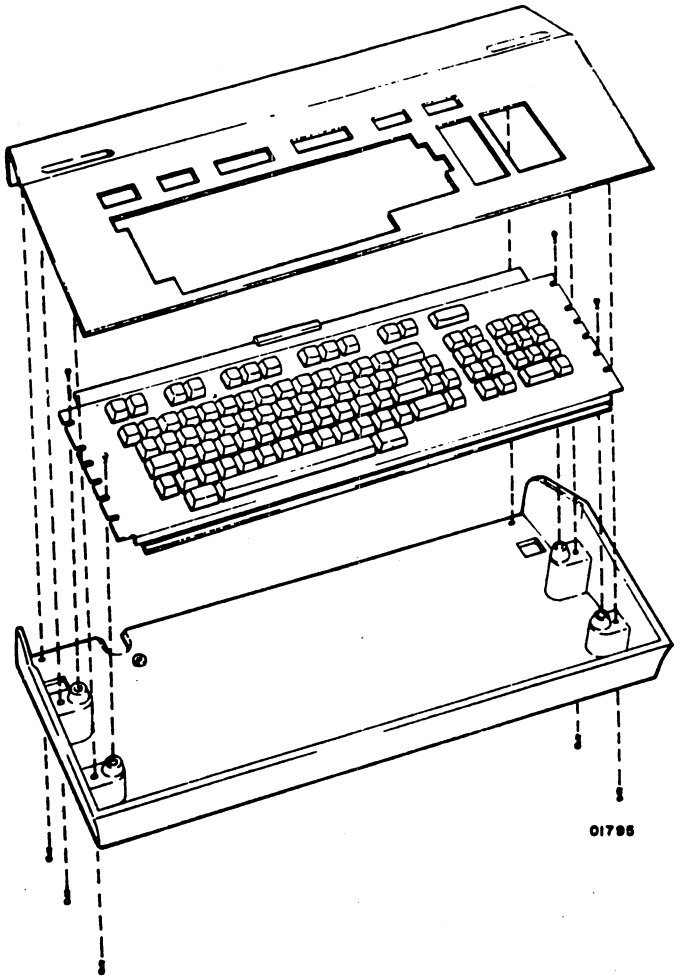

Figure 6E-27. Keyboard Assembly

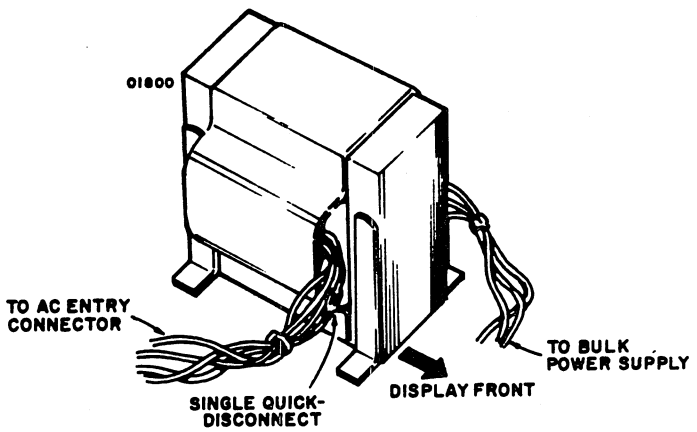

Figure 6E-28. AC Entry Transformer

3. Remove the video module (procedure E12, steps 1 through 6).
4. Disconnect the connector at J1 of the bulk power supply (see procedure E17 and figure 6E-26).
5. Disconnect the connector leading to the ac entry panel.
6. Disconnect the single quick-disconnect terminal at the transformer.
7. Remove the four screws that hold the transformer to the bottom of the chassis.
8. Lift the transformer out of the chassis.
9. Place the new transformer into the position vacated by the old one.
10. Fasten the transformer down with four screws.
11. Connect the single quick-disconnect terminal at the transformer.
12. Connect the J1 connector to the bulk power supply board.
13. Connect the connector leading to the ac entry panel.
14. Replace the video module (procedure E12, steps 7 through 15).
15. Press the POWER ON/OFF swtich to ON.
16. Go to table 6-2.

E20 VIDEO PRINTED-CIRCUIT BOARD VOLTAGE MEASUREMENT

To measure +465 V dc, perform the following:

1. Set the voltmeter to measure +465 V dc.
2. Remove the cabinet hood (procedure E21).
3. Press the POWER ON/OFF switch to ON.
4. Connect the black (-) lead from the voltmeter to chassis ground.

WARNING

Do not touch anything with hands and use only one hand at a time to connect the leads to the test points.

5. Connect the red (+) lead to resistor R8A (figure 6E-29).

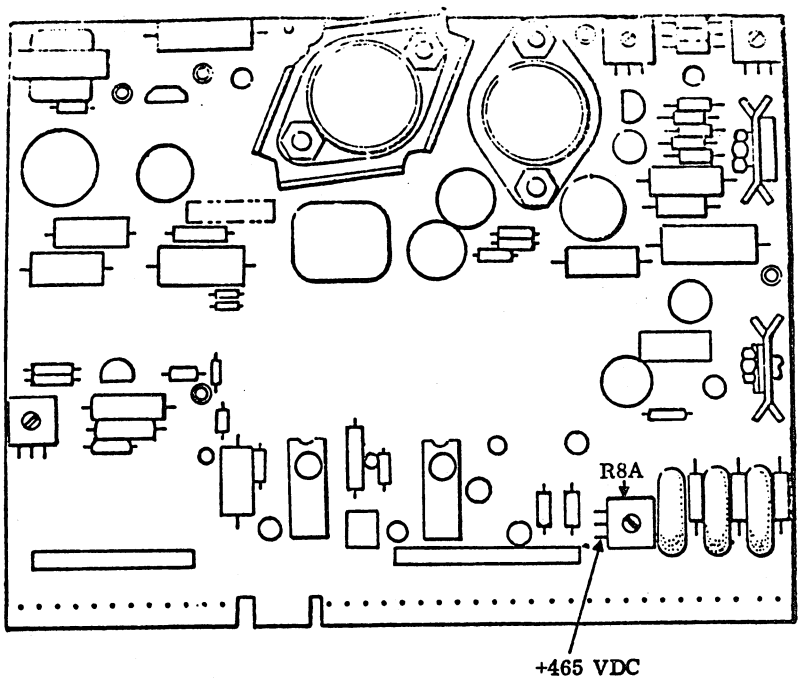

Figure 6E-29. Test Point for +465 V dc

6. Check that the voltmeter indicates +465 ±47 V dc.

7. If the voltage is within tolerances, go to step 8; if not, return to the point of origin on table 6-2 for further instructions.

To measure -190 V dc, perform the following:

8. Set the voltmeter to measure -190 V dc.

9. Connect the positive (+) lead to the chassis ground. If the voltmeter has a separate switch for selecting -dc, reverse polarity, such as Simpson Model 250, connect the common (black lead) to chassis ground and select -dc on the meter.

10. Connect the negative (-) lead to R1A (figure 6E-30).

11. Check that the voltmeter indicates -190 ±25 V dc.

12. If the reading is within tolerances, go to step 13; otherwise, go to table 6-2.

To measure +45 V dc, perform the following:

13. Set the voltmeter to measure +45 V dc.

14. Connect the black lead (common) to chassis ground.

15. Connect the red (+) lead to diode CR4A (figure 6E-31).

16. Check that the meter indicates +45 ±4.5 V dc.

17. If the voltage is within tolerances, go to step 18; if not, go to table 6-2.

To measure +5 V dc and +15 V dc, perform the following:

18. Set the voltmeter to measure +15 V dc.

19. Connect the black (-) lead to the chassis ground.

20. Connect the red (+) lead to pin 8 of BJ4 (figure 6E-32).

21. Check that the meter indicates +15 ±0.75 V dc.

22. Connect the red (+) lead to pin 22 of BJ4.

23. Check that the meter indicates +15 ±0.75 V dc.

24. Connect the red (+) lead to pin 4 of BJ1 (figure 6E-32).

25. Check that the meter indicates +5 ±0.25 V dc.

26. Go to table 6-2.

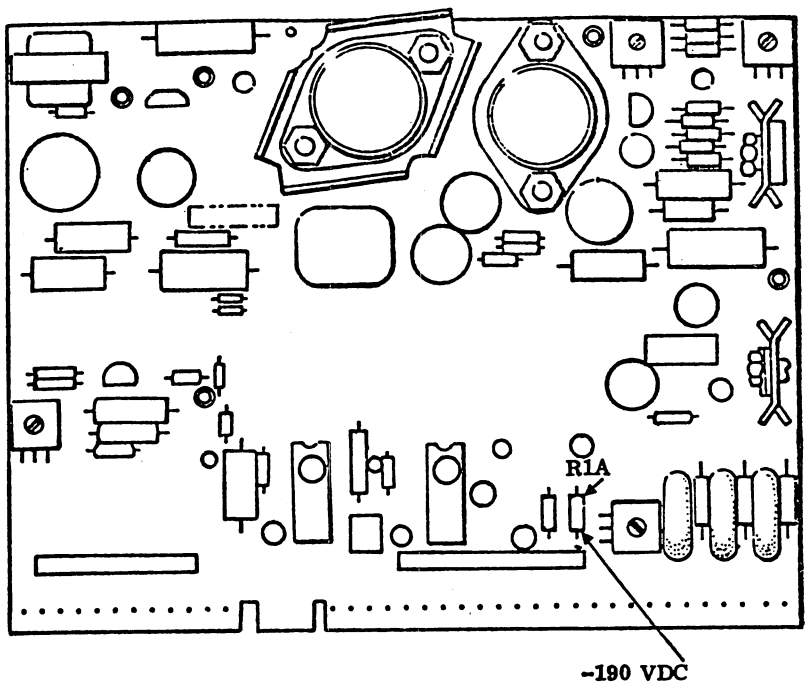

Figure 6E-30. Test Point for -190 V dc

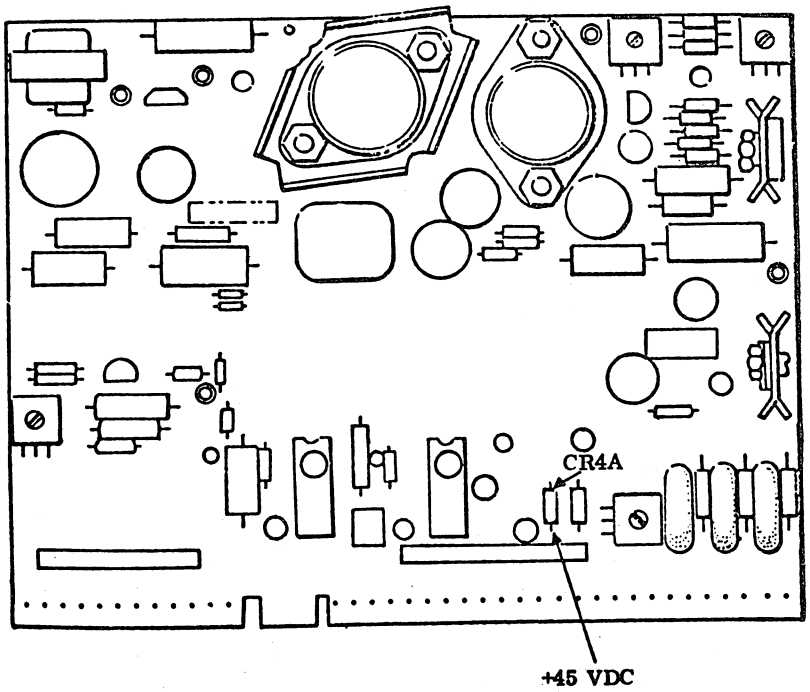

Figure 6E-31. Test Point for +45 V dc

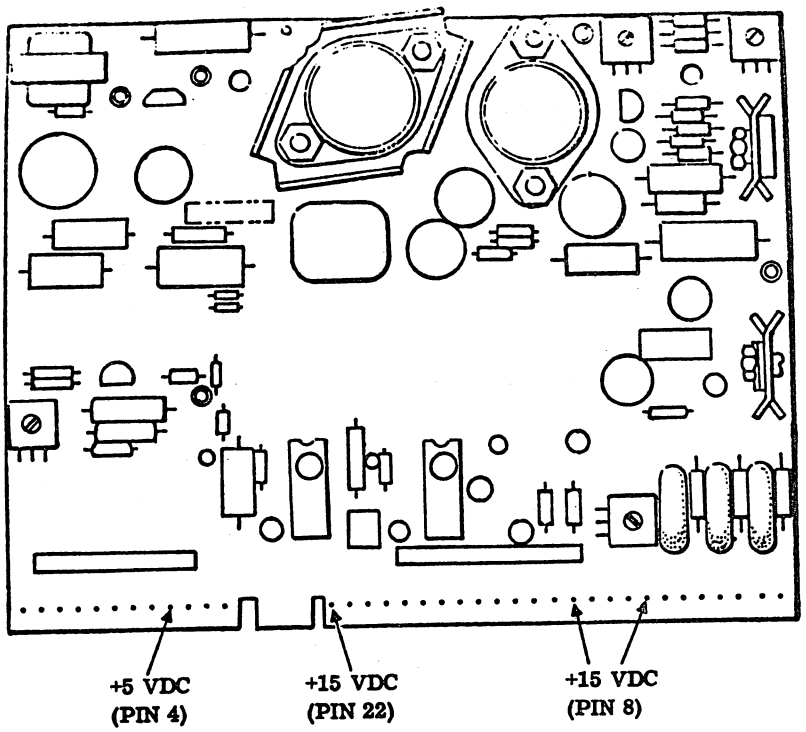

Figure 6E-32. Test Pins for +5 V dc and +15 V dc

E21 CABINET HOOD REMOVAL

To remove the cabinet hood, perform the following:

WARNING

Use extreme care when handling the TV module. Rough handling can cause the CRT to implode with tremendous force resulting in severe injury. Do not nick or scratch the glass or subject it to any undue pressure during replacement. When handling the CRT, always wear safety goggles and heavy gloves for protection

WARNING

With the power applied, severe shock is received if the high-voltage transformer or the lead to the anode or the area of the anode on the CRT is touched. Be careful when the following procedures are performed not to touch anything higher than the yoke. Keep tools out of the area.

1. Remove the two screws in the rear of the cabinet.
2. Lift the cabinet hood back and up from the chassis.

To install the cabinet hood, perform the following:

3. Position the cabinet hood in the track to the chassis.
4. Fasten the two screws in the rear of the cabinet.

E22 MEASURING LOW VOLTAGES

To measure +5 V dc, perform the following:

1. Press the POWER ON/OFF switch to OFF.
2. Remove the cabinet hood (procedure E21).
3. Press the POWER ON/OFF switch to ON.
4. Check for the power on condition (illuminated LEDs) on board A03 in the logic card cage. If no LED is illuminated, check that the ac power cord is plugged into the site ac power outlet. If the indicators still do not light, proceed to table 6-2.
5. Set the voltmeter to measure +5 V dc.
6. Apply the voltmeter black (-) lead to ground (GND) test point on the A03 board (figure 6E-33).
7. Apply the red (+) lead to the +5 V dc test point (figure 6E-33).

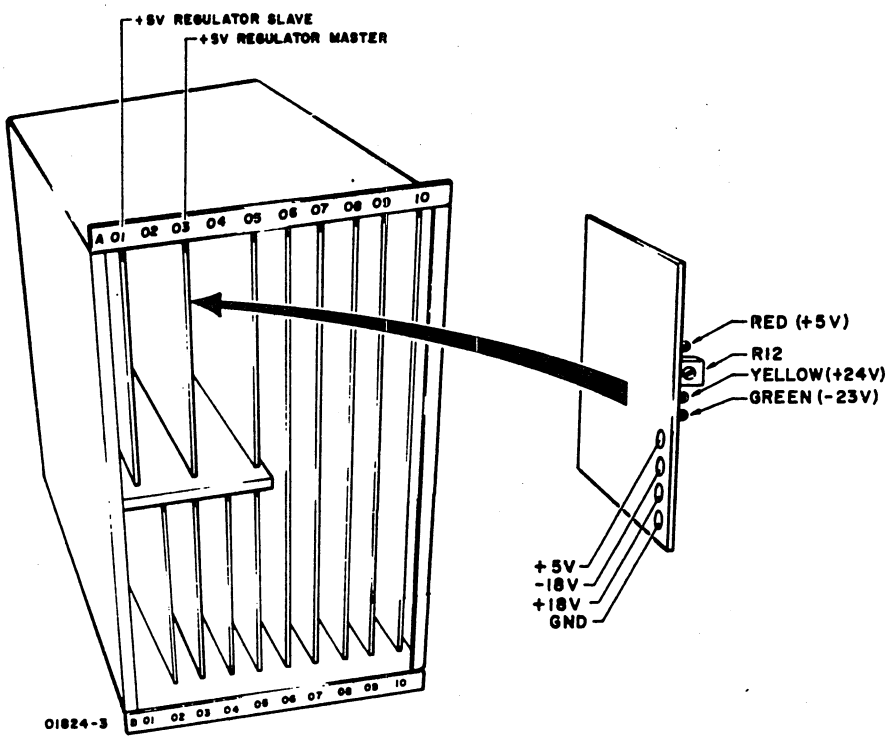

Figure 6E-33. +5 V dc Regulator Board Test Points

8. The meter should indicate +5 V dc. If the voltage is other than +5, adjust to +5 by turning the adjustment screw of potentiometer R12 (figure 6E-33). If this cannot be adjusted, replace the A03 card.

NOTE

Only potentiometer R12, which faces the rear of the device and can be adjusted while the card is installed, is adjustable in the field. Do not adjust any other potentiometer on the +5 V dc regulator board.

To measure +24 V dc, perform the following:

9. Set the meter to measure +24 V dc.

10. Apply the red (+) lead to the +18 V dc test point (figure 6E-33) and the black (-) lead to GND (figure 6E-33).

11. Check that the meter indicates a reading of +24 ±6 V dc.

12. If the measurable voltage is less than +17 V dc or more than +30 V dc, replace the bulk power supply board (procedure E17).

To measure -23 V dc, perform the following:

13. Set the meter to measure -23 V dc.

14. Apply the black (-) lead to the -18 V dc test point and the red (+) lead to GND (figure 6E-33).

15. Check the meter for -23 V dc ±6 V dc.

16. If the measurable voltage reading is unobtainable. replace the bulk power supply board (procedure E17).

To measure -9 V dc, perform the following:

17. Set the meter to measure -9 V dc.

18. Apply the red (+) lead to GND (figure 6E-34).

19. Apply the black (-) lead to the -9 V dc test point on board 08 (figure 6E-34).

20. Check that the meter indicates a reading of 9 ±0.5 V dc. If the voltage reading falls outside the indicated tolerance, replace the bulk power supply (procedure E17).

To measure -12 V dc, perform the following:

21. Set the meter to measure -12 V dc.

22. Apply the black (-) lead to the -12 V dc test point on the edge of board 09, just above test point 22, approximately 1-1/4 inch below the board midpoint (figure 6E-34).

23. Apply the red (+) lead to GND (figure 6E-34).

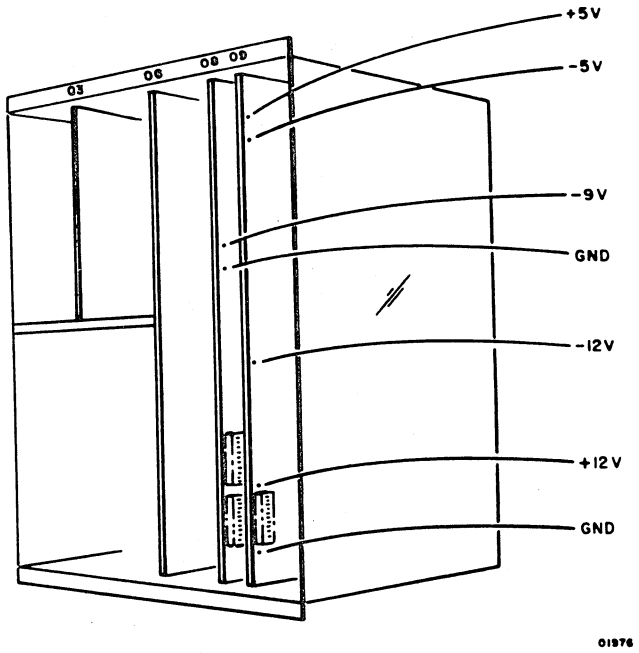

Figure 6E-34. Memory and Processor Voltage Test Points

24. Check that the meter indicates a reading of -12 ±0.6 V dc.

25. If the voltage is not within the tolerances of step 24, replace the bulk power supply (procedure E17).

To measure +12 V dc, perform the following:

26. Set the meter to measure +12 V dc.

27. Apply the red lead to the +12 V dc test point on the edge of board 09 just below test point 30 (figure 6E-34).

28. Apply the black (-) lead to GND (figure 6E-34).

29. Check that the meter indicates a reading of +12 ±0.6 V dc.

30. If the voltage reading falls outside acceptable tolerances (step 29), replace the bulk power supply (procedure E17).

E23 INTENSITY CONTROL ON DISPLAY PANEL CHECK/REPLACEMENT

To check the INTENSITY control (figure 6E-35), perform the following:

1. Press the POWER ON/OFF switch OFF.

2. Remove the indicator panel on which the control is mounted (figure 6E-35) by inserting fingers between the panel and bezel (procedure E10). Carefully pry out the

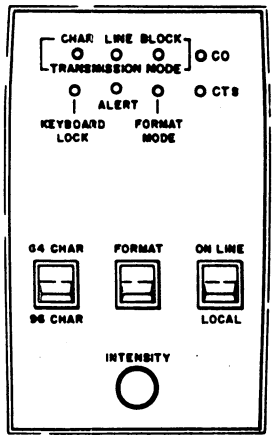

Figure 6E-35. INTENSITY Control

panel gradually from one end and then the other to release the clips holding the panel to the bezel.

3. Set the ohmmeter to X 1000.

4. Attach one ohmmeter lead to the center pin on the back of the INTENSITY control and the other lead to one of the other two pins.

5. Rotate the INTENSITY control knob while holding the leads to the pins. Check that the meter reads 0 ohm when the INTENSITY control is fully counterclockwise (full right) and 100,000 ohms when fully clockwise (full left). Replace the INTENSITY control if the correct results are not obtained (steps 8 through 14 describe replacement).

6. Remove the lead on the outer pin and attach it to the pin on the other side of the center pin. Keep the other lead on the center pin.

7. Rotate the INTENSITY control knob as described previously (step 5) and observe the meter for the same readings. If the correct results are not obtained, replace the INTENSITY control.

To replace the INTENSITY control, perform the following:

8. Test the new control with an ohmmeter (step 3 through 7).

9. Unsolder three wires from the old control. Identify the wires.

10. Pull off the knob to gain access to the hex ringnut on the front side of the panel.

11. Remove the hex ringnut using a 1/2-inch socket.

12. Remove the ground wire on the inside of the panel and withdraw the old control from the unit.

13. Solder the three wires to the new control and attach it to the panel by inserting the control post through the hole in the panel and screwing on the hex ringnut from the front. Before tightening the nut fully, attach the ground wire between the control and the panel.

14. Replace the panel by inserting the bottom edge in the bezel opening and carefully pressing the panel into place while aligning the panel with the hole and gently applying pressure down and in. Slight pressure on the clips allows them to be inserted easily.

E24 BAUD RATE SWITCHES CHECK/REPLACEMENT

To check the operation of the baud rate switches, perform the following:

1. Press the POWER ON/OFF switch to OFF.

2. Remove the cabinet hood (procedure E21).

3. Note the setting of the baud rate switches on the processor board 09 (figure 6E-8) and check their positions with the decal on the side of the card cage to verify that the low baud rate switch setting is 110 baud (switches set = 1111 on board 09) and the high baud rate switch setting is 9600 baud (switches set = 0110 on board 09). Figure 6E-36 shows these two basic settings. If the system requires any of the other available low and/or high baud rate(s), check the switch settings in figures 6E-37 and 6E-38.

4. Press the HIGH RATE/300/LOW RATE switch on the front panel to LOW RATE.

5. Set the TEST/NORMAL switch (ac power entry panel) to TEST.

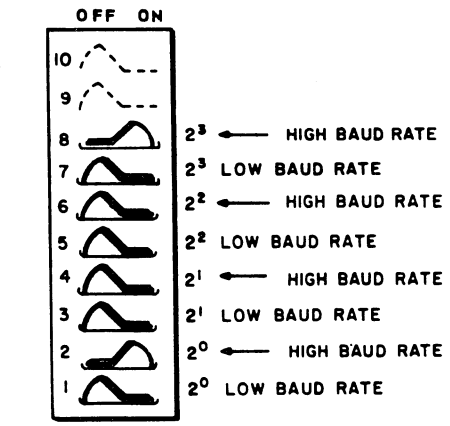

Figure 6E-36. High Baud Rate Set to 9600 – Low Baud Rate Set to 110

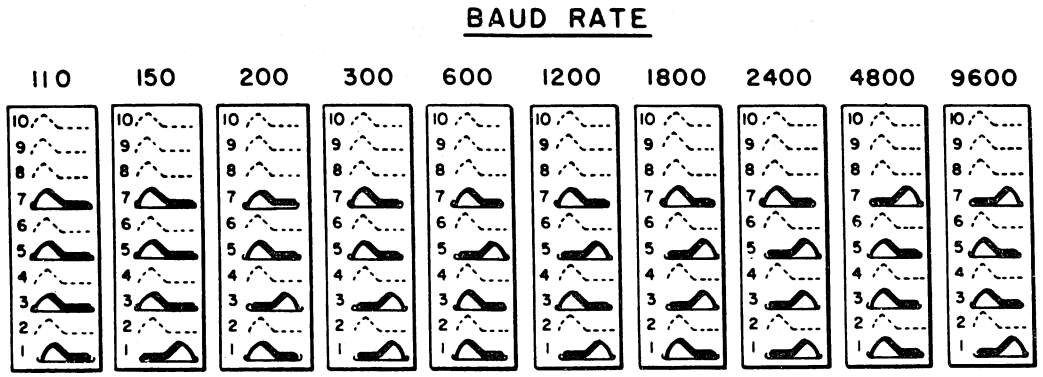

Figure 6E-37. Setting Low Baud Rate Switches

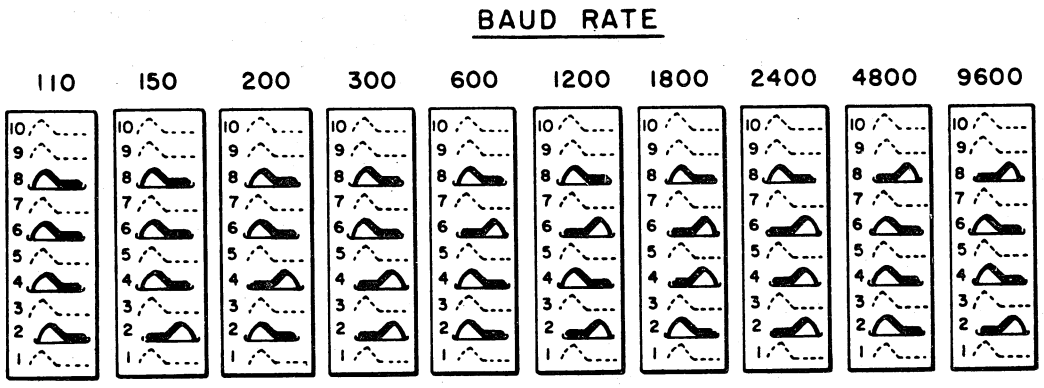

Figure 6E-38. Setting High Baud Rate Switches

6. Press the POWER ON/OFF switch to ON.

7. Wait 30 seconds. If the checksum pattern (figure 6E-39) appears on the top two display lines, proceed to step 8; otherwise, proceed to table 6-2.

8. Press the space bar on the keyboard twice.

9. Wait until the terminal begins writing characters on the screen at the bottom line (it may take 15 seconds for the terminal to reach the portion of memory that is displayed). Observe what should be the low rate (110 baud) characters being written on the display.

10. Press the HIGH RATE/300/LOW RATE switch on the front panel to 300 while observing the characters being written on the screen. The rate of character writing on the screen should more than double (from 110 baud to 300 baud).

11. Press the HIGH RATE/300/LOW RATE switch on the front panel to HIGH RATE while observing the characters being written on the screen. The rate of character writing on the screen should increase by a factor of 32 (from 300 baud to 9600 baud).

12. Replace the processor board (procedure E8) if the rate at which characters are written on the screen does not speed up approximately when the rate switch is moved from LOW RATE to 300 or from 300 to HIGH RATE. If the problem still exists, check the HIGH RATE/300/-LOW RATE switch (steps 13 through 18).

13. Press the POWER ON/OFF switch to OFF.

14. Remove the front switch-indicator panel by inserting fingers or a knife between the panel and the bezel.

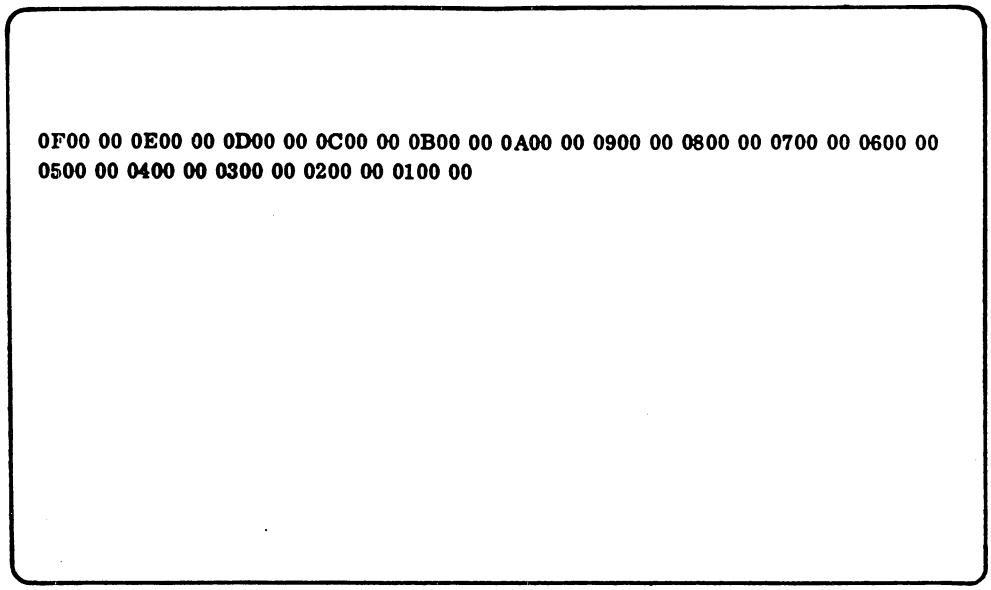

Figure 6E-39. Checksum Display

15. Check the continuity between the center black wire (pin S5-2) and the top white/black wire (pin S5-1) with the switch pressed to the HIGH RATE (up) position. The ohmmeter or continuity tester should indicate no resistance (closed circuit).

16. Keep the meter test leads on the top and center pins and move the switch to 300 (center) position and then to the LOW RATE (bottom) position. The meter should indicate an open circuit in both positions.

17. Check the continuity between the center black wire (pin S5-2) and the bottom white/orange wire (pin S5-3) with the switch pressed to the LOW RATE position. The meter should indicate a closed circuit (continuity). If the circuit is open, replace the switch (steps 19 through 26).

18. With the meter leads still attached to the center pin and the bottom pin, press the switch to the 300 (center) position and the HIGH RATE (top) position. The meter should show an open circuit in both switch positions. If a closed circuit is indicated, replace the switch (step 19 through 26).

To remove the HIGH RATE/300/LOW RATE switch, perform the following:

19. Press the POWER ON/OFF switch to OFF.

20. If the panel is not removed from the bezel, insert fingers or a knife between the bezel and the panel to remove it.

21. Identify the wires with masking tape: the top white/black wire should be marked S5-1; the center black wire should be marked S5-2; and the bottom white/orange wire should be marked S5-3.

22. Slide the wires from the switch terminals.

23. Remove the switch from the panel by pushing it out from the pin side of the panel.

To install a new switch, perform the following:

24. Insert the switch into the mounting hole in front of the panel and press it into place, making sure the pins are on the right (the same as the other switches).

25. Slide the wires on the pins; S5-1 on top, S5-2 (black) in the center, and S5-3 on the bottom.

26. Position the panel over the mounting hole in the chassis and press it gently into the bezel.

E25 KEYBOARD CHECK

To check the operation of the keyboard, perform the following:

1. Check the lowercase keys (96-character set).

   a. Set the 64/96 CHAR switch to 96 CHAR (figure 6E-40).

   b. Release the SHIFT LOCK key, if it is locked.

   c. Press each black key in turn (excluding the REPEAT and CONTROL keys, but including the space bar and numeric pad), examining the display for the proper character.

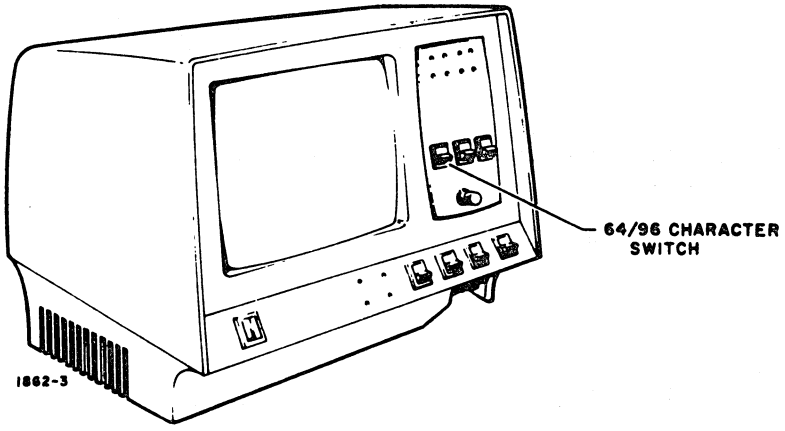

Figure 6E-40. 64 CHAR/96 CHAR Switch

2. Check the uppercase keys (96-character set).

   a. While pressing either SHIFT key, press each black key in turn (excluding the REPEAT and CONTROL keys).

   b. Repeat step a using the other SHIFT key (one key is sufficient).

   c. Press the SHIFT LOCK key.

   d. Press one or two black keys, examining the display for the proper character.

3. Check the CONTROL keyboard keys.

   a. Release the SHIFT LOCK key, if it is locked.

   b. While pressing either CONTROL key, press each of the keys shown in figure 6E-41, examining the display for the control code symbols.

   c. Repeat step b using the other CONTROL key (one key is sufficient).

4. Check the alphabetic keys (64-character set).

   a. Place the 64/96 CHAR switch in the 64 CHAR position (figure 6E-40).

   b. Release the SHIFT LOCK key if locked.

   c. Press any alphabetic key, examining the display for the proper uppercase alpha character.

   d. Return the 64/96 CHAR switch to normal operating position.

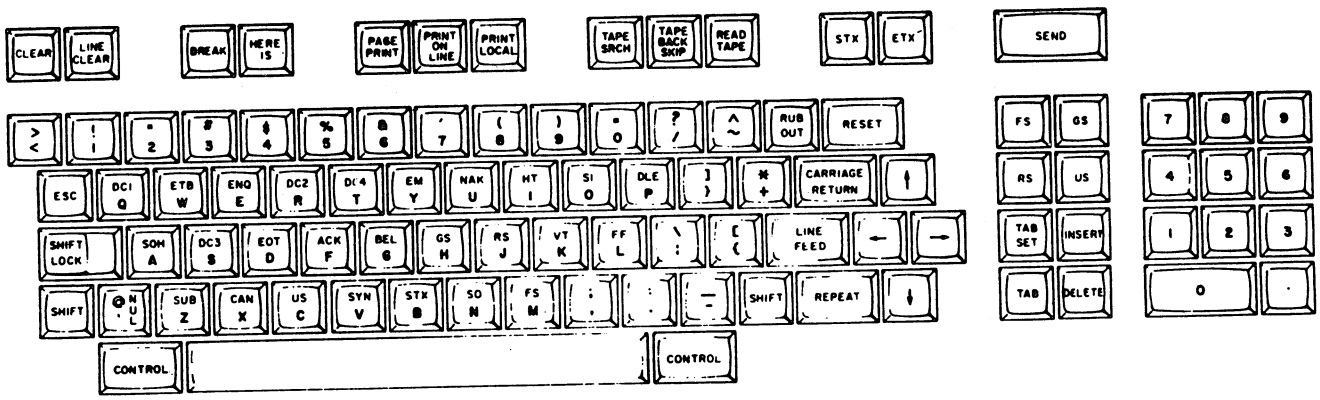

Figure 6E-41. Special Control Code Keys

E26 MONITOR ADJUSTMENTS

If the raster/picture is tilted or not centered on the screen, perform the vertical and horizontal alignment (procedure E14) before making further video adjustments.

To make video (displayed characters) adjustments, perform the following:

1. Press the POWER ON/OFF switch to OFF.
2. Remove the cabinet hood (procedure E21).
3. Position the TEST/NORMAL switch (rear panel) to TEST.
4. Press the POWER ON/OFF switch to ON. Wait 30 seconds.
5. If the checksum display appears on the screen, proceed with adjustments (step 6); otherwise perform the following:
   a. Turn the INTENSITY knob clockwise until the raster appears.
   b. If there is no raster, go to table 6-2.
   c. Increase the video gain by turning the contrast control (figure 6E-42) clockwise until the checksum characters appear on the display.
   d. If no video appears, go to table 6-2.
   e. When a checksum appears on the display, proceed with the adjustments (step 6).
6. The ALERT light should be on. If not, replace the ALERT indicator (procedure E10) as soon as the monitor adjustments are made.
7. Press the space bar on the keyboard three times.
8. Adjust the vertical height (figure 6E-42) by turning the adjustment screw clockwise or counterclockwise until the rectangle of displayed characters in 13 cm (5.24 inches) in height.
9. Adjust the horizontal width to 20 cm (8.0 inches) by turning the L2A coil adjustment screw (figure 6E-42) suing a 3/32-inch nonmetallic Allen wrench.
10. Reduce the video gain to zero by turning the contrast control (figure 6E-42) fully counterclockwise.

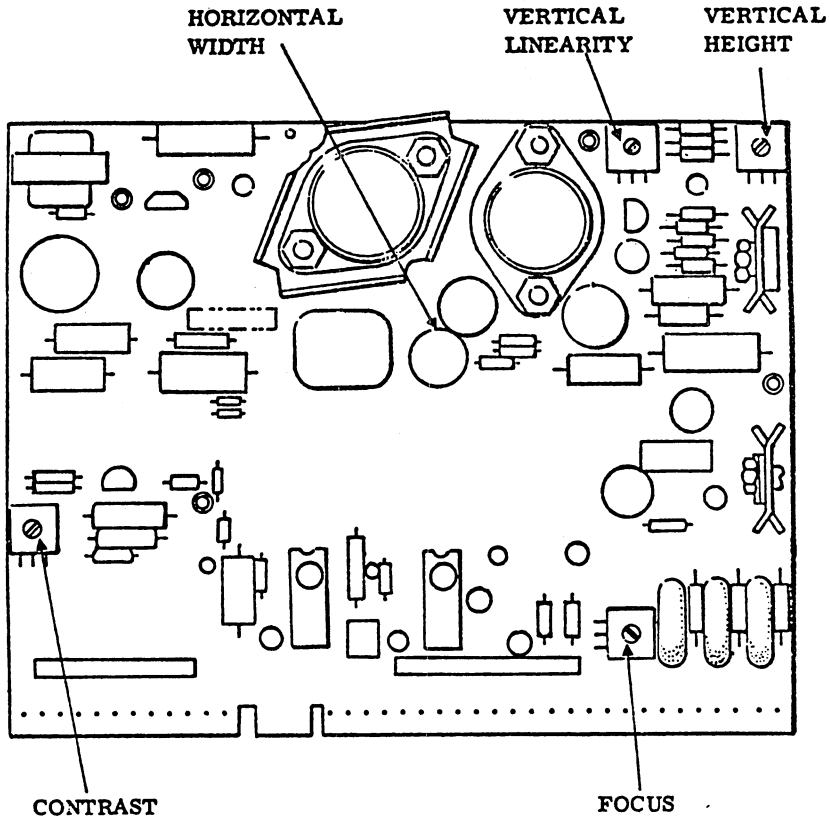

Figure 6E-42. Monitor Printed-Circuit Board Adjustments

11. Turn the INTENSITY control on the front panel clockwise until the raster appears.

12. Turn the INTENSITY control counterclockwise carefully until the raster is invisible in normal room lighting but dimly visible in the dark (shaded with hands).

13. Turn the contrast adjustment screw clockwise to the desired character brightness.

14. Check the top line, center line, and bottom line of the displayed characters for uniformity. If the characters are compressed anywhere on the screen, turn the vertical linearity adjustment screw (figure 6E-42) clockwise or counterclockwise until the character distortion disappears and all lines are equal in vertical size.

15. Insert the screwdriver in the focus adjustment screw slot (figure 6E-42) and adjust it while observing the characters on the screen. Turn the focus adjustment screw clockwise until the dots (each character dot matrix) elongate toward the upper-right corner of the display screen. Then turn the focus control slowly counterclockwise until the elongated dots pull back to form round dots and the entire screen is without fuzziness.

E27 CHARACTER/LINE/BLOCK SWITCH CHECK/REPLACEMENT

To check operation of the CHARACTER/LINE/BLOCK switch, perform the following:

1. Press the POWER ON/OFF switch to OFF.

2. Remove the front switch-indicator panel by inserting fingers or a knife between the panel and the bezel.

3. Check the continuity between the center black wire (pin S2-2) and the top white wire (pin S2-1) with the switch pressed up to the CHARACTER position. An ohmmeter or continuity tester should indicate no resistance (closed circuit).

4. With the test leads still on the same wires, move the switch to the center (LINE) and bottom (BLOCK) positions. The meter should indicate an open circuit in both positions.

5. Check the continuity between the black wire (center pin) and the bottom white wire (S2-3) with the switch pressed to the bottom (BLOCK mode) position. A short-circuit condition should exist. If open, replace the switch (Step 7).

6. With the leads still attached to the two bottom pins, press the switch to the center position and the top position. An open should be indicated by the meter. If a short circuit is indicated on the meter, replace the switch (step 7).

To remove the switch, perform the following:

7. Press the POWER ON/OFF switch to OFF.

8. If the panel is not removed from the bezel, insert fingers or a knife between the bezel and the panel to remove it.

9. Identify the wires with masking tape: the top white wire should be marked S2-1, the center black should be marked S2-2, and the bottom white/brown wire should be marked S2-3.

10. Slide the wires from the switch terminals.

11. Remove the switch from the panel by pushing it out from the pin side of the panel.

To install the new switch, perform the following:

12. Insert the switch into the mounting hole in the front of the panel and press it into place, making sure that pins are on the right (the same as the other switches).

13. Solder the wires to the pins; S2-1 is on top, S2-2 (black) is in the center, and S2-3 is on the bottom.

14. Position the panel over the mounting hole in the chassis and press it gently into the bezel.

E28 TWO-POSITION SWITCHES CHECK/REPLACEMENT

NOTE

Disconnect input power.

To check out the two-position switches on the front panel, perform the following:

1. Press the POWER ON/OFF switch to OFF.

2. Remove the panel from the chassis by inserting fingers or a knife between the panel and the bezel.

3. Check the continuity across the two pins of the switch is moved to both positions. The meter should move in both directions, indicating open and closed circuits.

To remove the two-position switches on front panel, perform the following:

4. With the power off and the panel separated from the chassis, mark the wires as necessary for proper reconnection, and slide the wires from the switch terminals.

5. Press the switch out the front of panel by pressing the switch from the inside of the panel.

To install the new switch, perform the following:

6. Press the new switch into position through the front of the panel.

7. If the switch is FULL DUPLEX/HALF DUPLEX, connect the white wire to the top pin (S4-1).

8. If the switch is ON LINE/LOCAL, connect the white wire to the top pin (S5-1).

9. If the switch is 64 CHAR/96 CHAR, connect the brown/black/white wire to the bottom pin (S1-3).

10. If the switch is FORMAT, connect the green/white wire to the top pin (S2-1).

11. The black wire is always soldered to the center pin.

12. If the switch is POWER ON/OFF, solder all three yellow wires to the appropriate pins as marked in step 4.

13. Press the panel into the hole in the bezel carefully until it snaps into place.

E29 AUDIBLE ALARM CHECK/REPLACEMENT

To check the audible alarm, perform the following:

1. Press the POWER ON/OFF switch to OFF.

2. Press the circuit breaker on the rear panel down and unplug the ac power cord.

3. Remove the front panel strip containing the POWER ON/OFF switch on the left side by inserting fingers or a knife between the panel and bezel near the DTR and REC indicators and then prying gently on the panel near the CHARACTER/LINE/BLOCK switch. Continue along the edge of the panel until the entire panel is free from the bezel.

4. Set the ohmmeter to measure resistance at X 1 scale.

5. Insert the red (+) probe through the hole in the bezel and touch the Sonalert† alarm pin on the right (marked +). If the Sonalert is not in the position shown in figure 6E-43, it may be necessary to remove it from its mounting in order to check it (steps 7 and 8).

6. While touching the tight pin with the red lead (figure 6E-43), insert the black lead through the hole in the bezel and touch it to the left lead. Thus touched, the Sonalert must sound. If the alarm does not sound, replace the Sonalert.

To remove the Sonalert, perform the following:

7. Remove the Sonalert by pushing it free from the underside of the cabinet base and gently working it out through the front panel strip slots. If your hands are too big to remove the Sonalert in this manner, first remove the video module (procedure E12, step 1 through 6) and then remove the Sonalert by prying it away from the floor of the cabinet.

8. Pull the terminals off the Sonalert.

To install the Sonalert, perform the following:

9. Press the Sonalert into the mounting snap.

10. Slide the red wire terminal on the pin marked +.

11. Slide the black wire terminal on the remaining pin.

12. If the video module was removed in step 7, replace it (procedure E12, steps 7 through 15).

E30 REFRESH STABILITY ADJUSTMENT

If the video display is unstable, that is, the entire character display appears to bloom in size in a pulasting fashion, perform the following:

1. Press the POWER ON/OFF switch to OFF.

2. Remove the cabinet hood (procedure E21).

3. Press the POWER ON/OFF to ON. Wait 30 seconds.

4. Verify that the 60 Hz refresh switch on memory card 08 (figure 6E-44) is set to match the cycles of the input power.

5. With power to the console display off, ground test point 23 of the 4BXD board in slot 06. Restore power to the console display.

6. With a small screwdriver, turn the refresh stability adjustment (figure 6E-44) counterclockwise/clockwise slowly until the character blooming stops. This indicates that the video frequency is synchronized to the display line frequency. If the instability does not stop, replace the refresh board 06 (procedure E8). Remove ground.

† Registered trademark of P. R. Mallory Co., Inc.

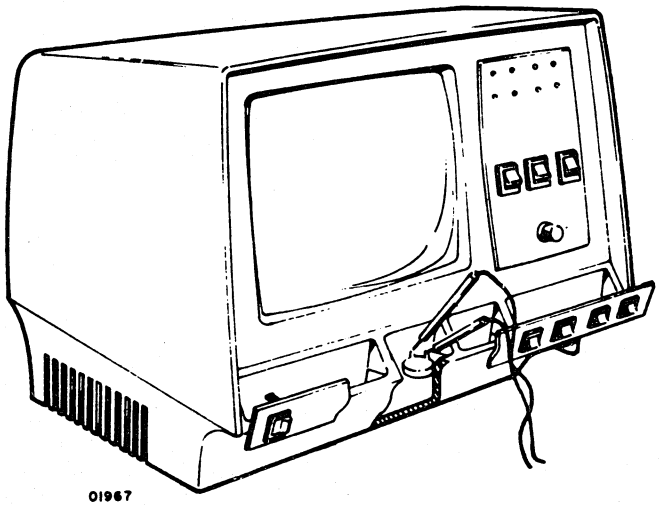

Figure 6E-43. Checking Sonalert

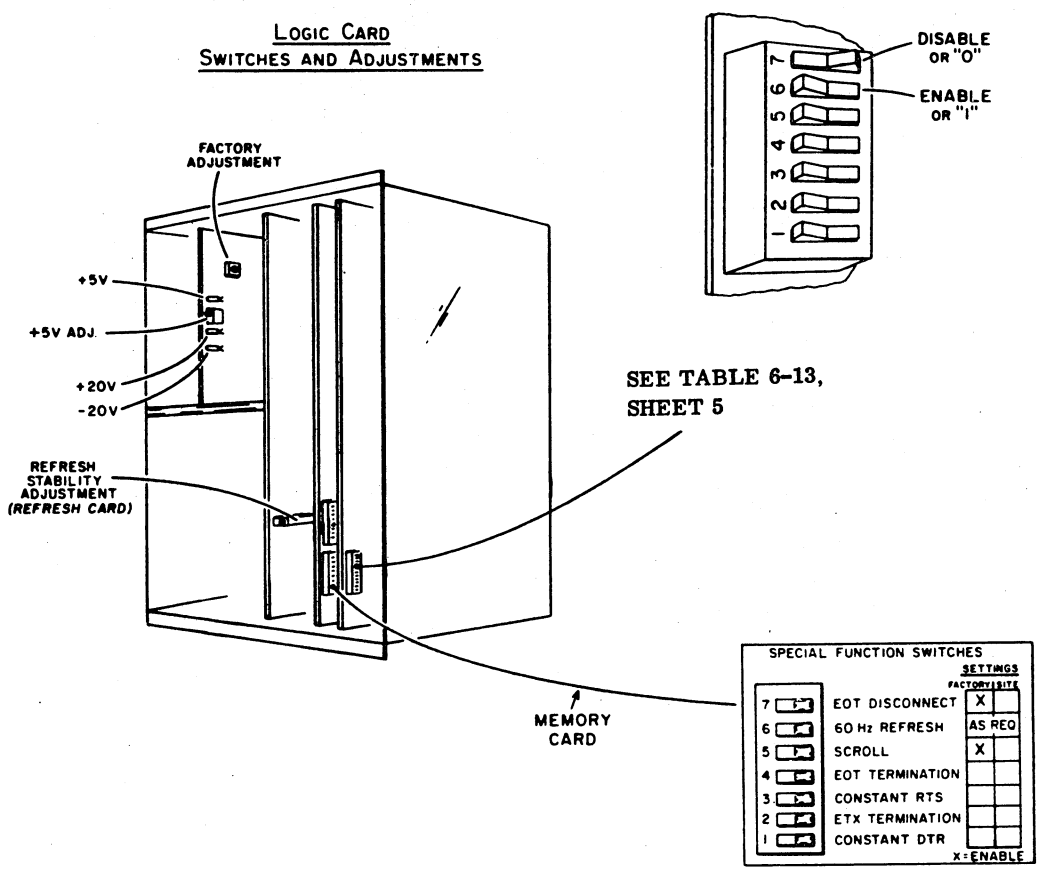

Figure 6E-44. Logic Module (Switches and Adjustments)

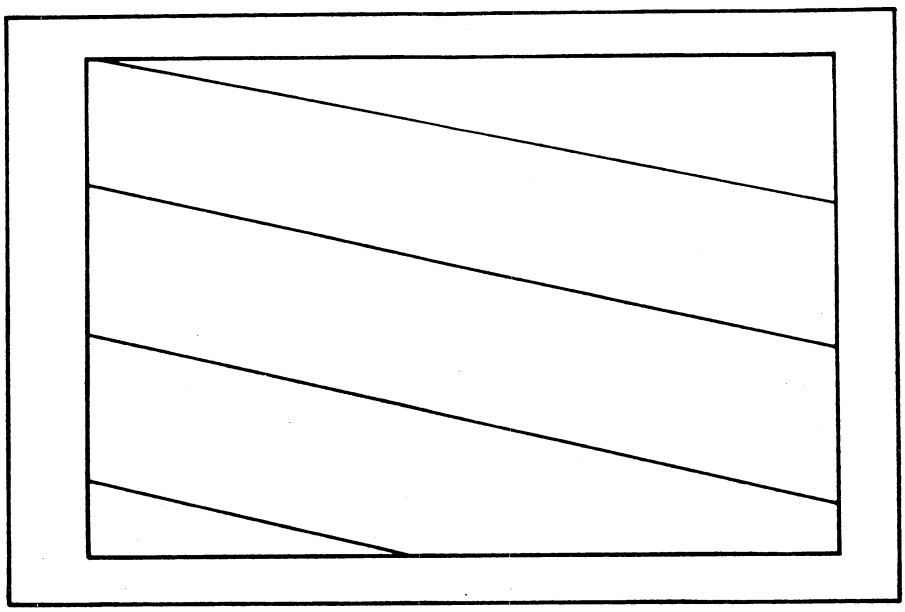

Figure 6E-45. Normal Raster

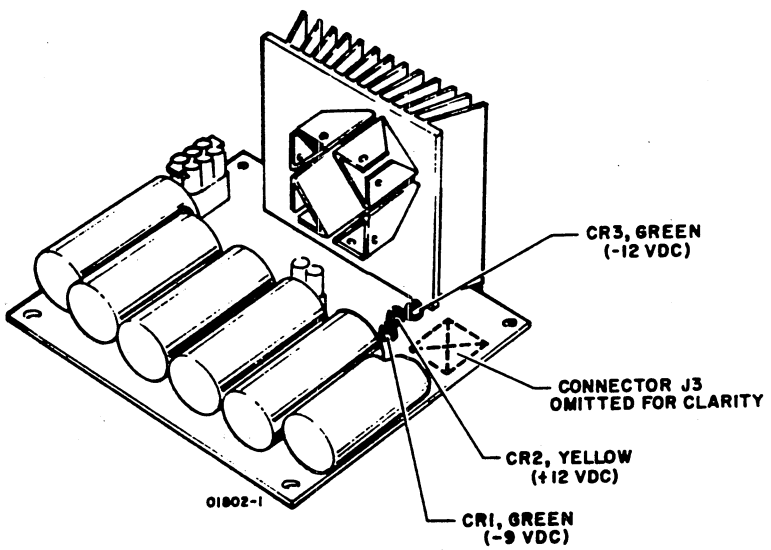

Figure 6E-46. Bulk Power Supply Indicator Lights

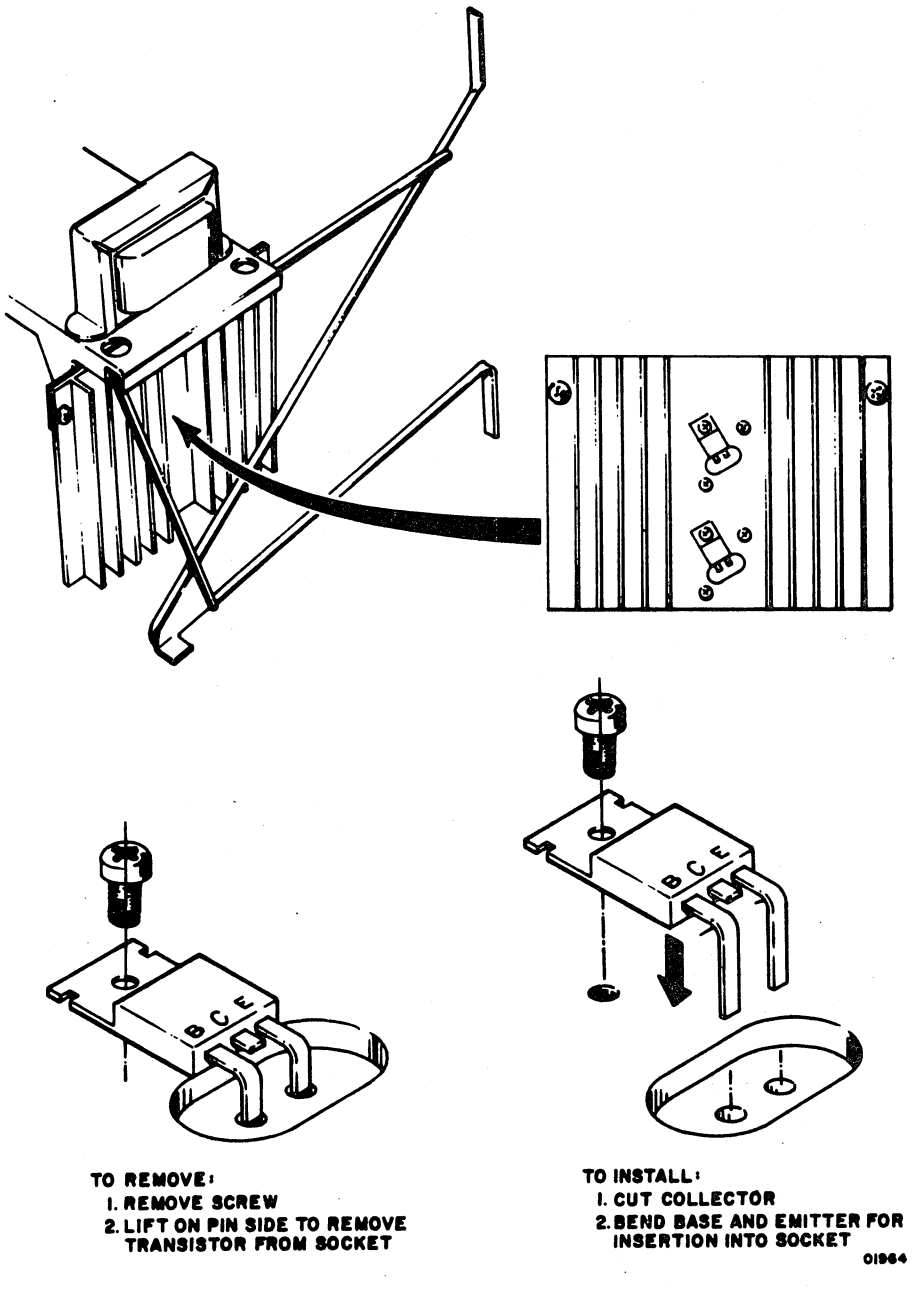

Figure 6E-47. 15 V dc Regulator and Heat Sink

LINE PRINTER PROCEDURES 6F

CONTENTS

Procedure		Page
F1	Power Turn-On	6F-1
F2	Power Turn-Off	6F-1
F3	General Inspection and Cleaning	6F-3
F4	Print Drum Inspection and Cleaning	6F-13
F5	Lubrication	6F-13
F6	Loading Diagnostic	6F-13
F7	Ribbon Installation	6F-16
F8	Forms Installation/Alignment	6F-18
F9	Format Tape Installation	6F-20
F10	Power Supply dc Voltage Test	6F-20
F11	Power Supply Replacement	6F-22
F12	AC Power Test	6F-23
F13	Power Supply Fuse Test	6F-25
F14	Mylar Ribbon Shield Replacement/Alignment	6F-26
F15	Format Reader Brush Replacement	6F-28
F16	Armature Striker Replacement	6F-28
F17	Print Hammer Replacement	6F-31
F18	Triac and Reed Relay Assembly Replacement	6F-31
F19	Ribbon Gear Motor Replacement (Left Side)	6F-33
F20	Ribbon Torque Motor Replacement (Right Side)	6F-35
F21	Ribbon Tracking Test	6F-36
F22	Control Panel Switch Replacement	6F-38
F23	Logic Chassis Circuit Board Replacement	6F-39
F24	Card Reader/Line Printer Controller Replacement	6F-40
F25	Tractor Assemblies Replacement	6F-40
F26	Vertical Forms Advancement Assembly Drive Belt Replacement	6F-42
F27	Idler Pulley Drive Belt Replacement	6F-42
F28	Clutch Pulley Drive Belt Replacement	6F-43
F29	Horizontal Motion Drive Motor Replacement	6F-44
F30	Print Drum Drive Belt Replacement	6F-44
F31	Print Drum Drive Motor Replacement	6F-44
F32	Print Density and Flight Time Adjustment	6F-44
F33	Circuit Board Potentiometer Adjustment	6F-46
F34	Hammer Drive Fuses Check and Replacement	6F-46
F35	Thermal Switch Replacement	6F-47
F36	+5 V dc Power Supply Adjustment	6F-49
F37	Format Reader Inspection	6F-49
F38	Format Reader Interlock Switch Adjustment/Replacement	6F-50
F39	Paper Tear and Out-of-Paper Switch Inspection	6F-50
F40	Paper Tear Switch Adjustment/ Replacement	6F-52
F41	Out-of-Paper Switch Adjustment/ Replacement	6F-53
F42	Gate Switch Check/Adjustment	6F-53
F43	Print Drum Interlock Switch Check	6F-56
F44	Print Drum Interlock Switch Replacement	6F-56
F45	6-Line/8-Line Switch Replacement	6F-56
F46	Logic Blower Motor Removal	6F-57
F47	Format Tape Preparation	6F-61

Figure		Page
6F-1	Line Printer Controls and Indicators	6F-1
6F-2	Main Power Switch (CB01)	6F-2
6F-3	Line Printer Top Cover Opening	6F-3
6F-4	Line Printer Signal Cable Connections	6F-4
6F-5	Gate Assembly Cabling	6F-5
6F-6	Hammer Assembly Cabling	6F-6
6F-7	Control Panel and Horizontal Motion Cabling	6F-7
6F-8	Vertical Motion Timing and Resistor Cabling	6F-7
6F-9	DC Power Supply Cable Assembly	6F-8
6F-10	Brush Reader and Triac and Relay Cable Assembly	6F-9
6F-11	Drum Gate Assembly Opening	6F-10
6F-12	Ribbon Installation Guide	6F-11
6F-13	Format Reader Assembly	6F-11
6F-14	Line Printer Chassis Side View	6F-12
6F-15	Line Printer Print Drum Motor Drive Belt	6F-13
6F-16	Drum Gate Assembly Opening (Column Locator)	6F-14
6F-17	Line Printer Chassis Side View (Lubrication)	6F-15
6F-18	Line Printer Print Drum Motor	6F-16
6F-19	Line Printer Drum Gate Assembly	6F-17
6F-20	Line Printer Ribbon Installation Guide	6F-17
6F-21	Line Printer Drum Gate Assembly (Paper Alignment)	6F-18

Figure		Page
6F-22	Line Printer Paper Path and Compressor Bar Alignment Guide	6F-19
6F-23	Line Printer Format Tape Installation Guide	6F-20
6F-24	Line Printer Chassis Side View (Power Supply Test Points)	6F-21
6F-25	Line Printer Power Supply Replacement Guide	6F-22
6F-26	Format Reader Assembly (115 V ac Test Points)	6F-23
6F-27	Line Printer Chassis (Line Filter)	6F-24
6F-28	Line Printer Power Supply Fuse Replacement Guide	6F-26
6F-29	Line Printer Drum Gate Assembly Opening	6F-27
6F-30	Mylar Shield and Ribbon Installation Guide	6F-28
6F-31	Format Brush Reader Assembly	6F-29
6F-32	Drum Gate Assembly Opening (Forms Compression Bar Removal)	6F-30
6F-33	Paper Plate Assembly Removal Guide	6F-30
6F-34	Line Printer Hammer Bank Assembly	6F-31
6F-35	Line Printer Hammer Replacement Guide	6F-32
6F-36	Triac and Reed Relay Replacement Guide	6F-33
6F-37	Line Printer Chassis Side View (Column Locator Scale)	6F-34
6F-38	Ribbon Gear and Torque Motors	6F-35
6F-39	Drum Gate Assembly (Terminal Board 1TB01)	6F-36
6F-40	Line Printer Ribbon Guide Plate Alignment Diagram	6F-37
6F-41	Line Printer Ribbon Tracking Guide	6F-37
6F-42	Control Panel Switch Replacement Guide	6F-38
6F-43	Line Printer Board Placement Diagram	6F-39
6F-44	Line Printer Tractor Assembly	6F-41
6F-45	Line Printer Tractor Assembly (Vertical Forms Drive Belt)	6F-42
6F-46	Line Printer Chassis Side View (Idler Pulley Drive Belt)	6F-43
6F-47	Print Drum Motor Wiring	6F-45
6F-48	Paper Guide Plate and Top Hammer Bank Shroud Removal Guide	6F-46
6F-49	Line Printer Print Quality Adjustment	6F-47
6F-50	Line Printer Chassis Side View (Hammer Drive Fuses)	6F-48
6F-51	Thermal Switch	6F-48
6F-52	Line Printer Mechanical Assembly	6F-49
6F-53	Line Printer Power Supply Adjustment Guide	6F-50
6F-54	Format Brush Reader Assembly	6F-51
6F-55	Line Printer Tractor Assembly (Paper Tear Switches)	6F-52
6F-56	Line Printer Paper Path and Out-of-Paper Switch	6F-54
6F-57	Line Printer Forms Compressor Bar Diagram	6F-55
6F-58	Drum Gate Assembly (Drum Gate Cover Removal)	6F-55
6F-59	Line Printer Drum Gate Latches	6F-56
6F-60	Print Drum Interlock Switch (IS07)	6F-57
6F-61	Print Drum Interlock Switch (Replacement)	6F-58
6F-62	6 LINE/8 LINE Switch	6F-59
6F-63	Triac Assembly	6F-60
6F-64	Format Tape Hole Tolerances	6F-61
6F-65	Format Tape Reference Marks	6F-61
6F-66	Format Tape Levels	6F-62
6F-67	Format Tape Splicing	6F-62

Table		Page
6F-1	Cable Connector Locations	6F-3
6F-2	Drive Belt Locations	6F-12
6F-3	Line Printer Lubrication	6F-13
6F-4	Hammer Driver Boards	6F-39

F1 POWER TURN-ON

To turn power on (figure 6F-1), perform the following:

1. Check that the ac power cord for the line printer is connected to the site power outlet.
2. Make sure that CB01 (figure 6F-2) is on.
3. Press the POWER ON switch on the line printer control panel. (If the printer does not come on, go to procedure F12.)

F2 POWER TURN-OFF

To turn power off (figure 6F-1), perform the following:

1. Press the POWER OFF switch on the line printer.

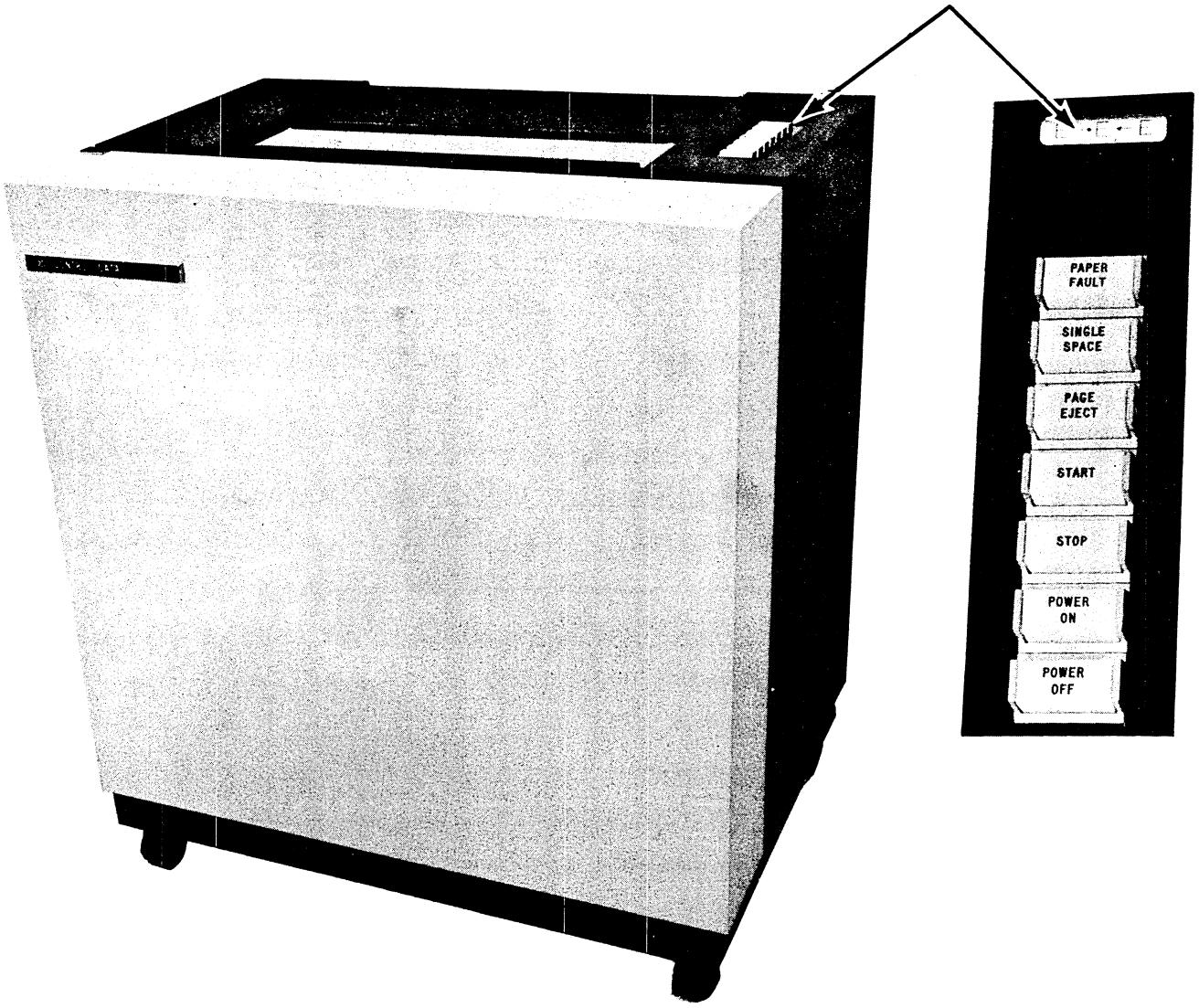

Figure 6F-1. Line Printer Controls and Indicators

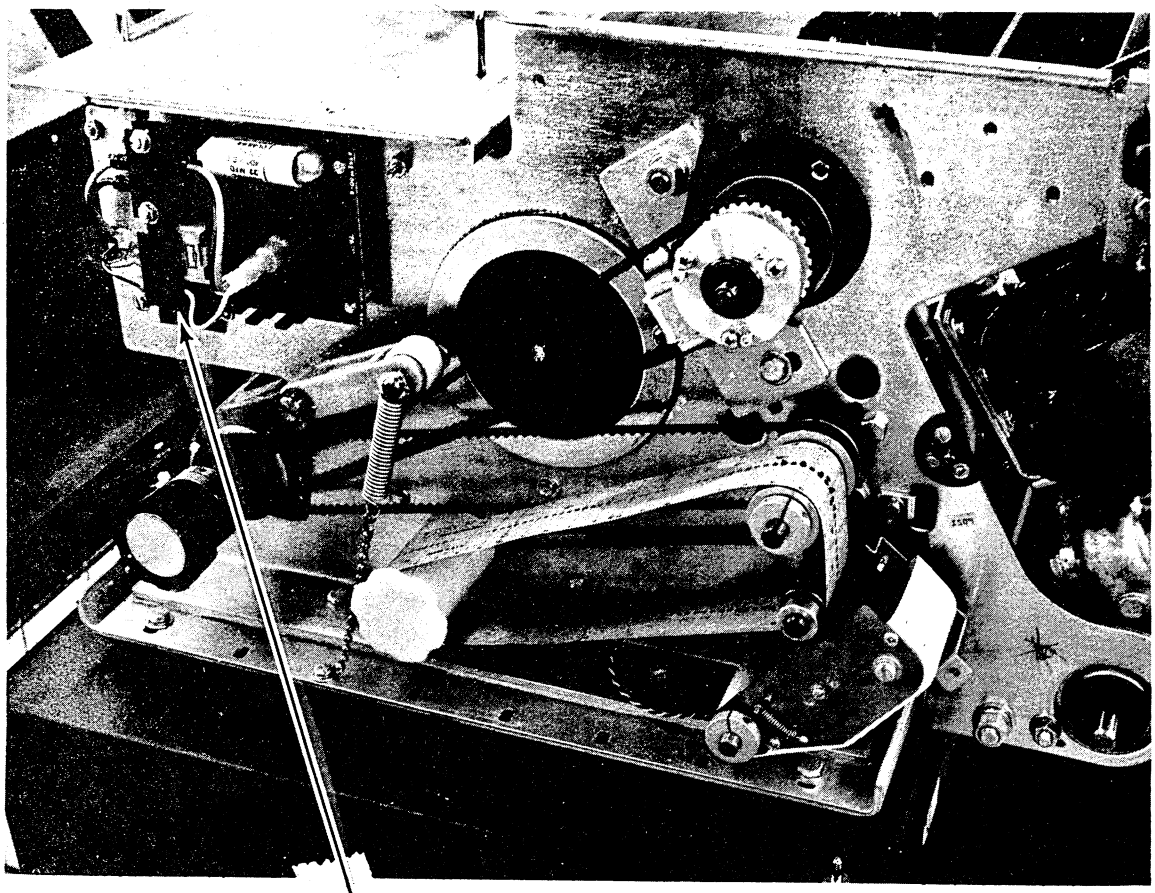

FORMAT READER ASSEMBLY

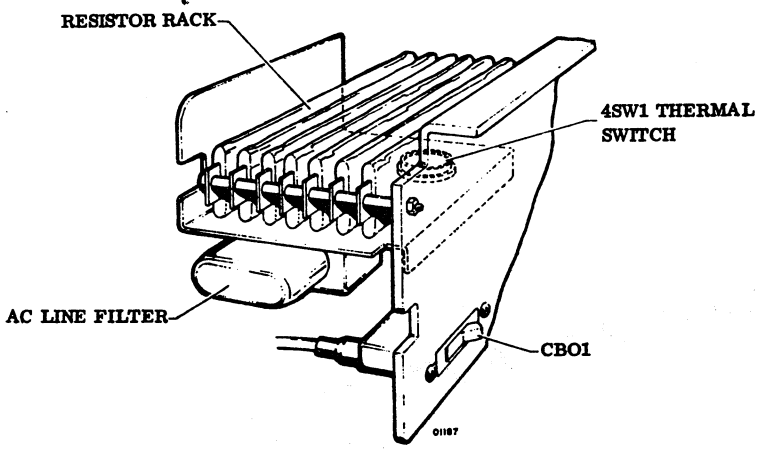

REAR VIEW (RIGHT CORNER)

Figure 6F-2. Main Power Switch (CB01)

F3 GENERAL INSPECTION AND CLEANING

To inspect and clean the line printer, perform the following:

1. Perform the power turn-off (procedure F2).
2. Remove the paper guide grill at the rear of the line printer and lift the top cover panel (figure 6F-3).

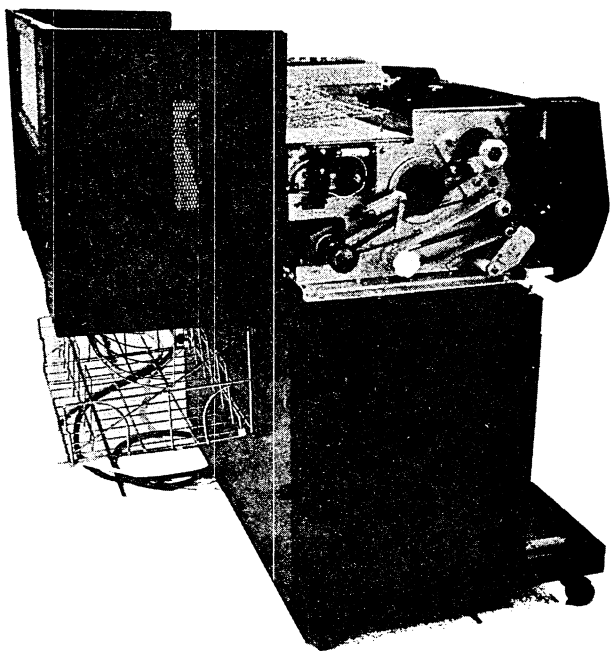

Figure 6F-3. Line Printer Top Cover Panel Opening

3. Verify that all logic circuit boards within the logic chassis are properly seated by applying firm thumb pressure at the upper and lower corners of each circuit board.
4. Verify that all cable connectors are properly seated (table 6F-1).

TABLE 6F-1. CABLE CONNECTOR LOCATIONS

Cable Name	Function	Figure
4J109	Line printer signal cable	6F-4
4J104	Gate assembly cable	6F-5
4J116	Hammer assembly cable	6F-6
4J105	Hammer assembly cable	6F-6
4J106	Hammer assembly cable	6F-6
4J107	Hammer assembly cable	6F-6
4J100	Control panel cable	6F-7
4J103	Horizontal motion cable	6F-7
4J110	Vertical motion cable	6F-8
4J108	Bank cable	6F-8
4J101A	Power supply cable	6F-9
4J101B	Power supply cable	6F-9
4J102	Power supply cable	6F-9
4J112	Triac and reed relay cable	6F-10
4J111	Format brush reader cable	6F-10

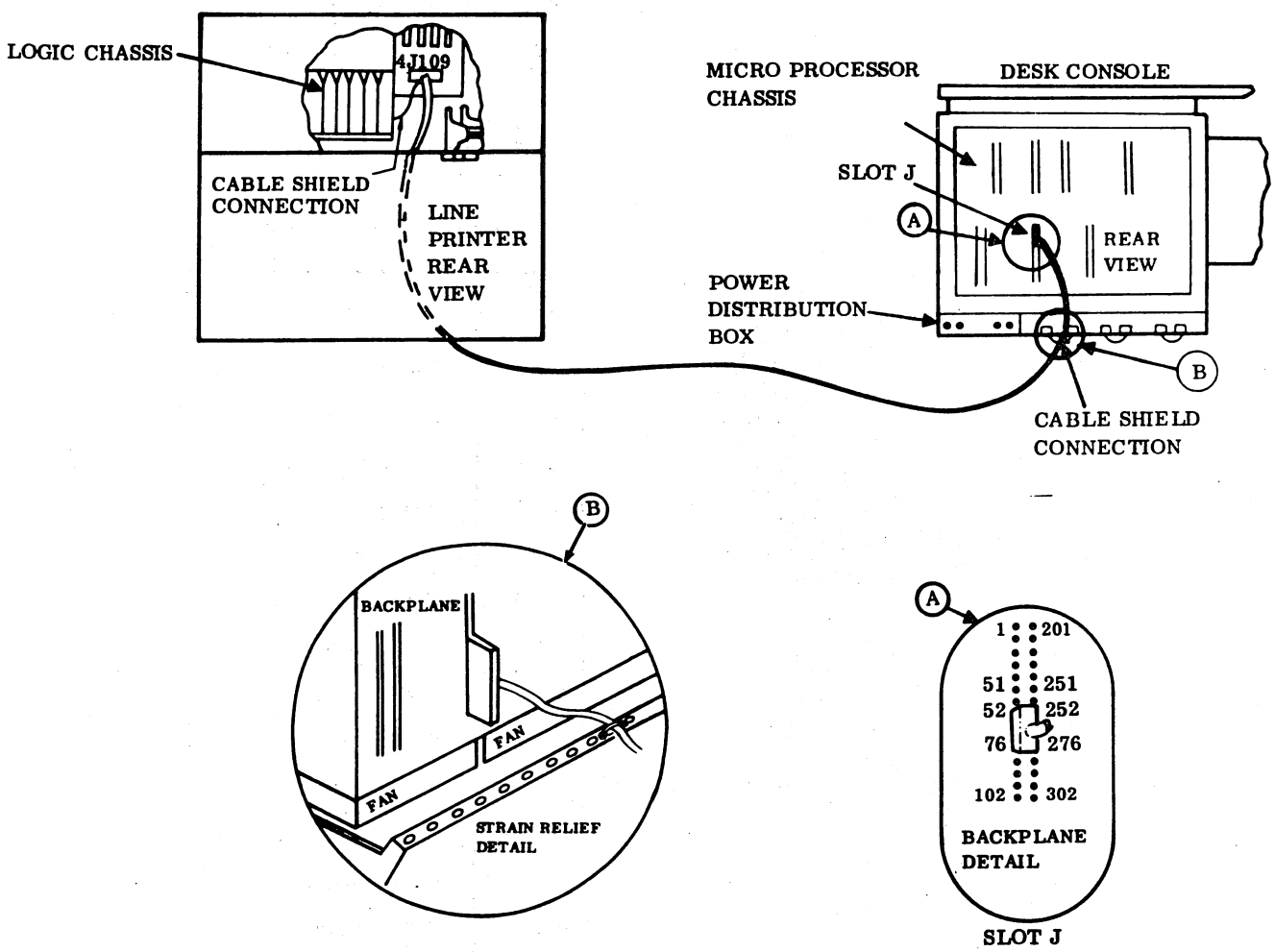

Figure 6F-4. Line Printer Signal Cable Connections

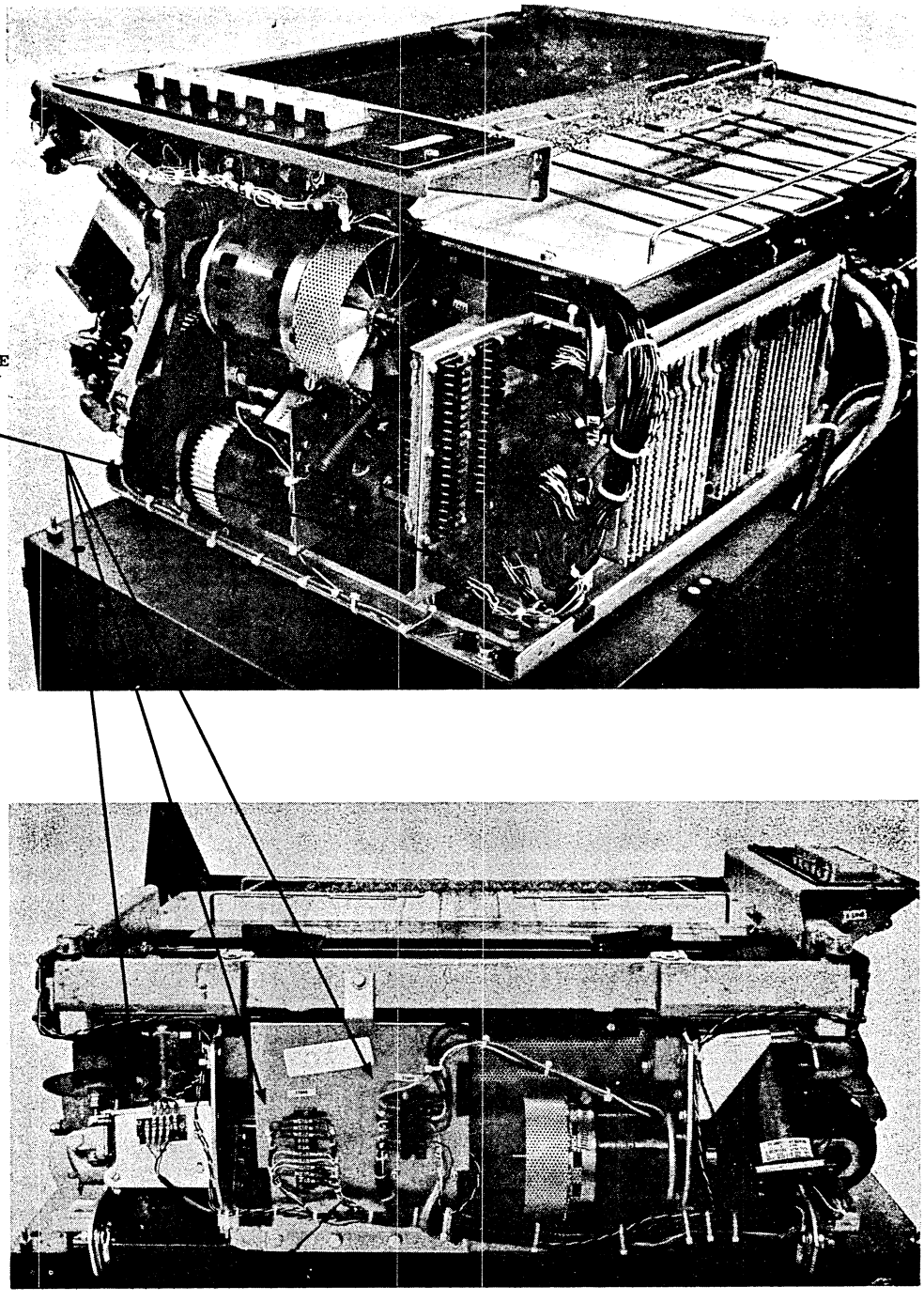

Figure 6F-5. Gate Assembly Cabling

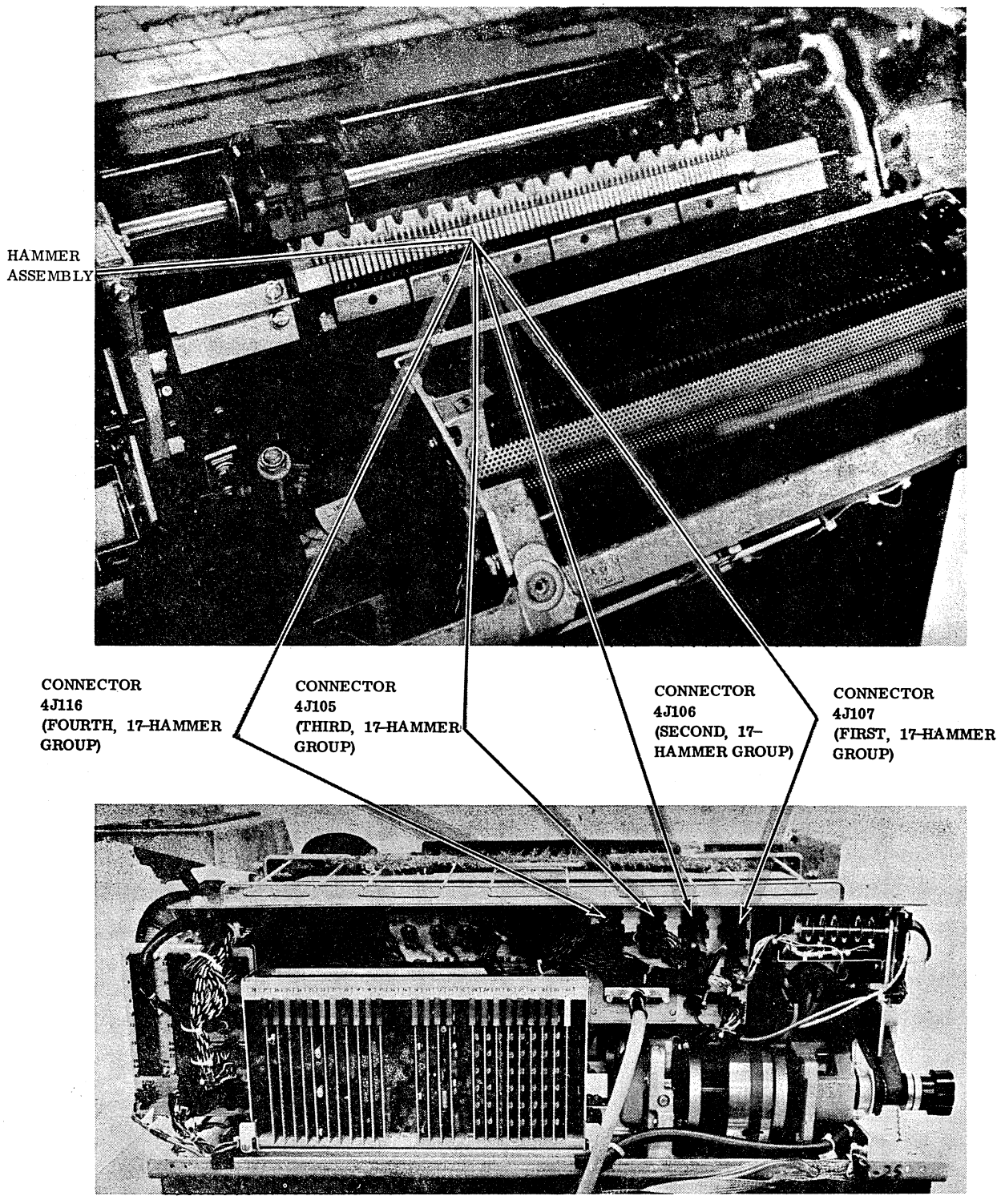

Figure 6F-6. Hammer Assembly Cabling

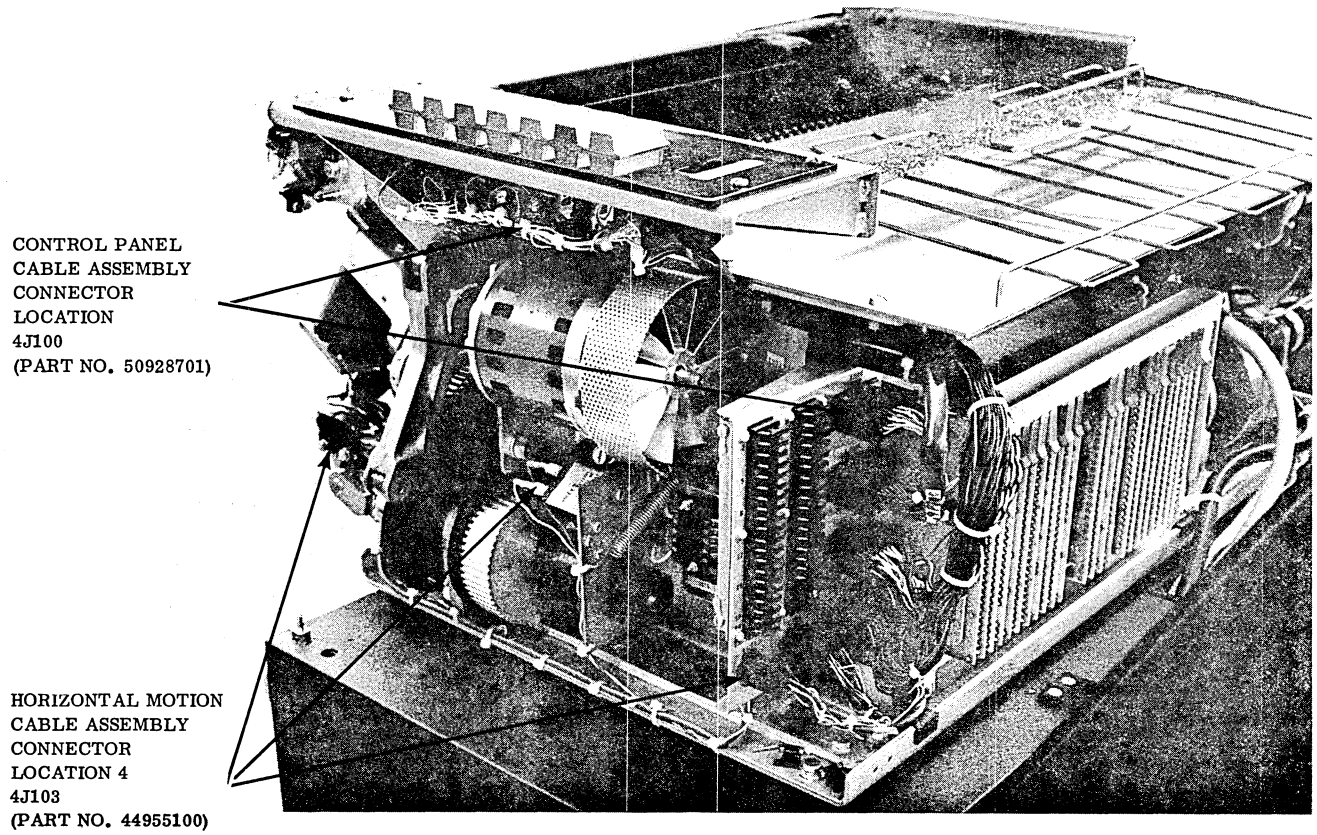

Figure 6F-7. Control Panel and Horizontal Motion Cabling

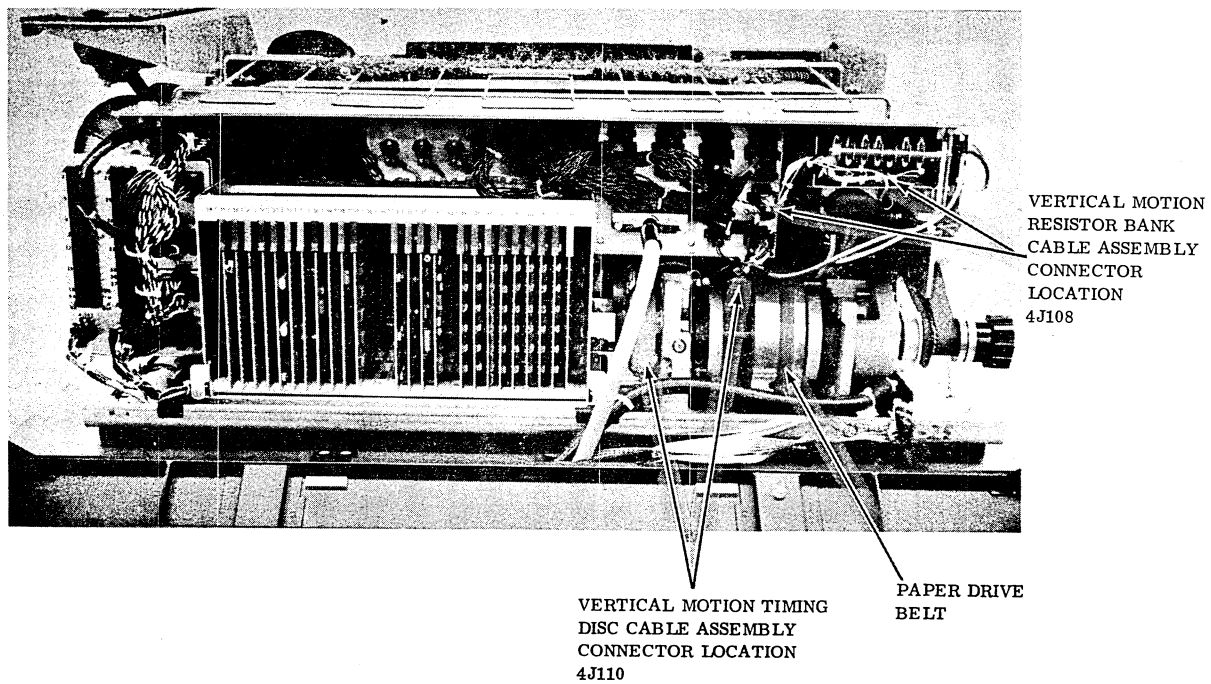

Figure 6F-8. Vertical Motion Timing and Resistor Cabling

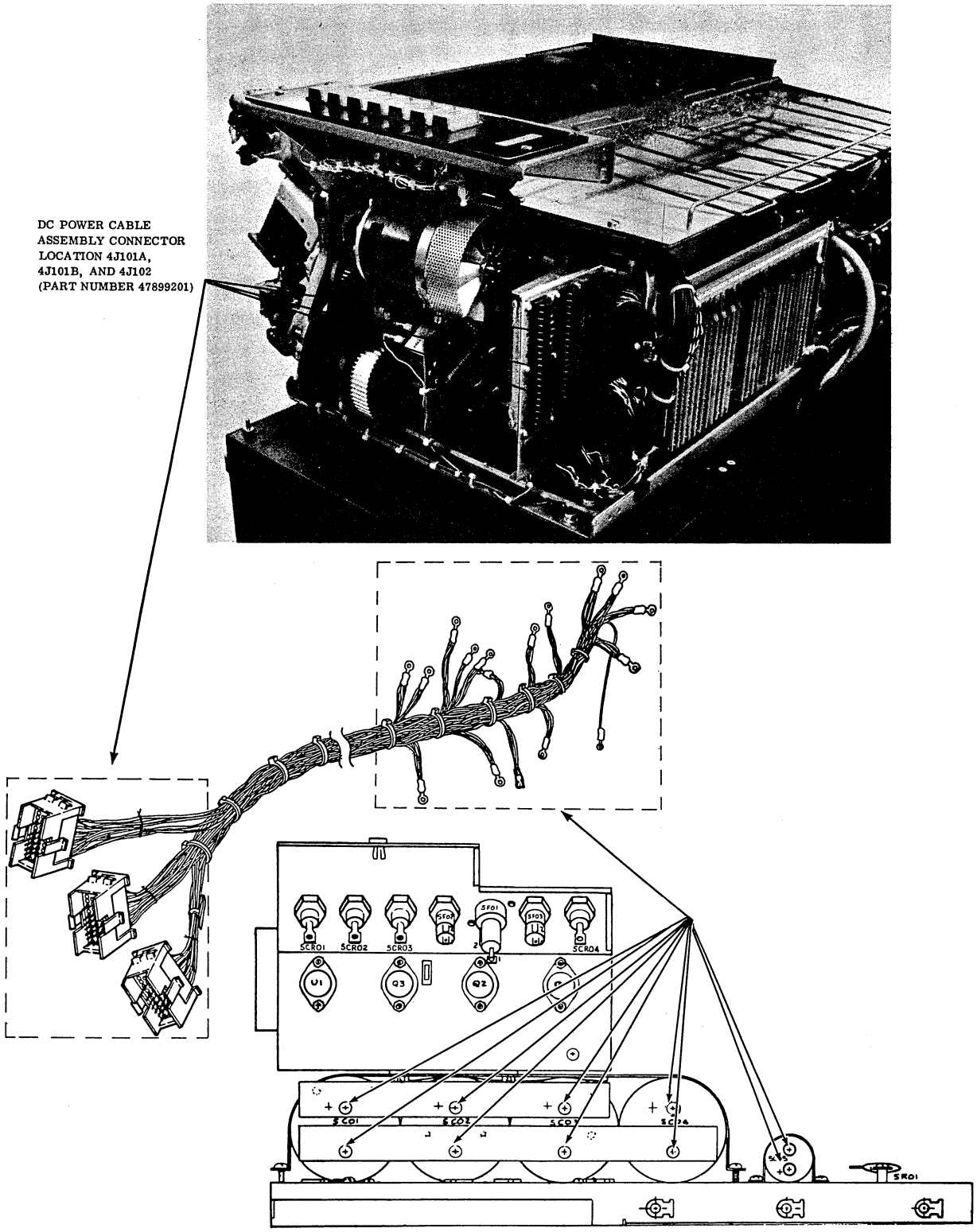

Figure 6F-9. DC Power Supply Cable Assembly

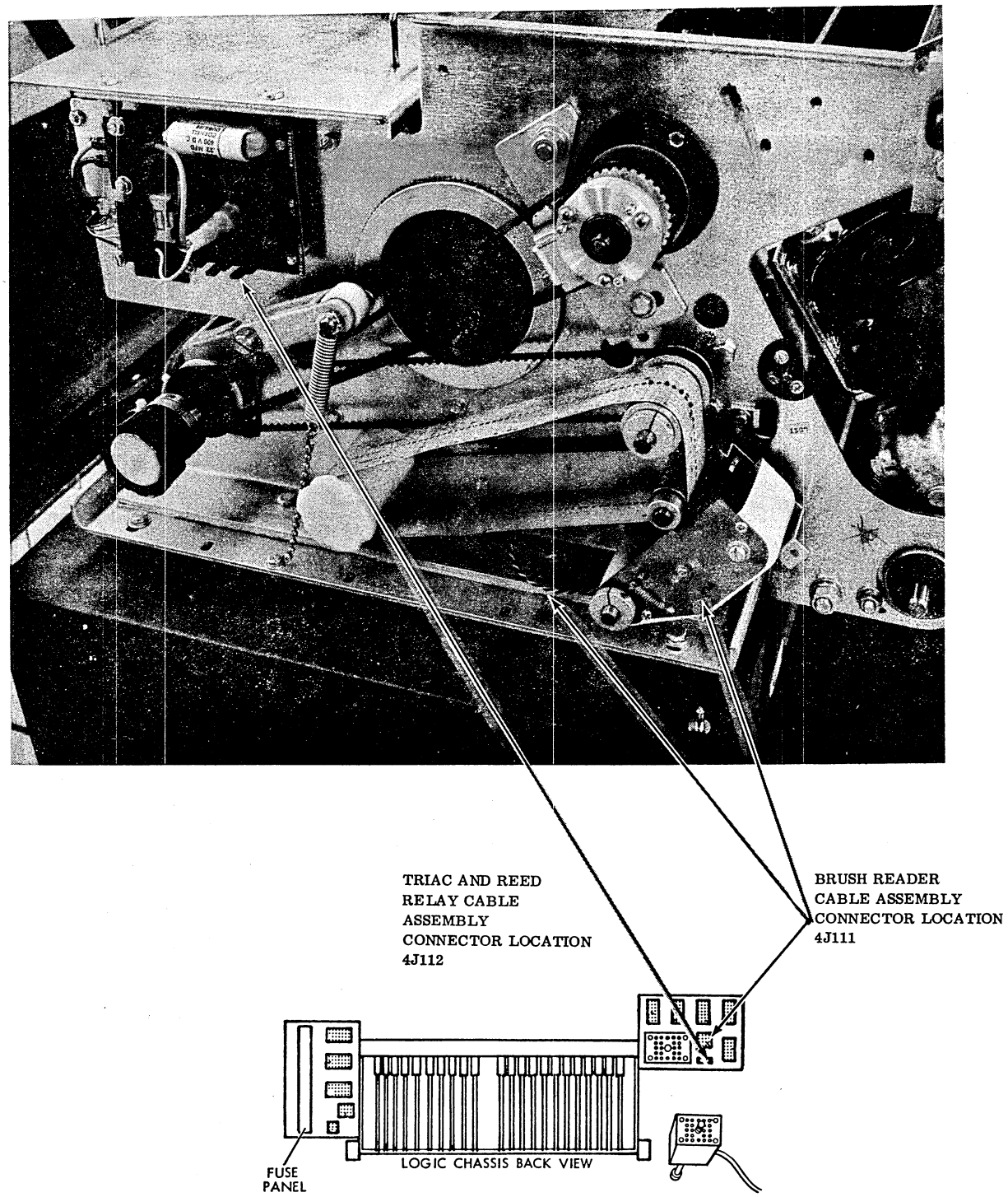

NOTE: SEE FIGURE 6F-8 FOR ACTUAL CONNECTOR LOCATION.

Figure 6F-10. Brush Reader and Triac and Reed Relay Cable Assembly

5. Pull the switch caps of the control panel switches one at a time and inspect the indicator bulbs for darkening. Replace the bulbs (part number 95671101) where required. No bulbs are required in the SINGLE SPACE, PAGE EJECT, or POWER OFF switches.

6. Open the front panel door of the line printer. Swing the drum gate assembly forward by pressing the drum gate latch (figure 6F-11).

7. Push the Mylar shield (figure 6F-12) back and remove the right side ribbon spool by lifting the spool upward. Clean the ink deposits from the reversing post using a solvent and a clean cloth or paper toweling.

8. Replace the right side ribbon spool and remove the left side ribbon spool by lifting the spool upward (figure 6F-12).

9. Clean the left side ribbon reversing post as in step 7; then replace the ribbon spool. Hold down the gate latch to remove the spool.

10. Pull the Mylar ribbon shield back into place and verify that the shield is free of tears and creases. It if is, replace it (procedure F14).

11. Verify that the format tape holes (figure 6F-13) are not elongated. If the format tape holes are elongated, replace the tape (procedure F9).

12. Brush and vacuum clean all areas where dust and dirt deposits accumulate. Check all pulley belts for indication of wear (table 6F-2).

13. Verify that the static eliminators (figure 6F-14) are present and in good condition. If they are not in good condition, replace the static eliminators (part number 94788101) as required.

14. Turn the power on (procedure F1). Verify that the cooling fans are circulating air through the logic rack and the resistor pack (figure 6F-8). If the air is not being circulated, go to procedure F46.

15. Return the gate drum assembly to its latched position by pushing the assembly forward. Close the top panel cover of the line printer and attach the paper guide grill.

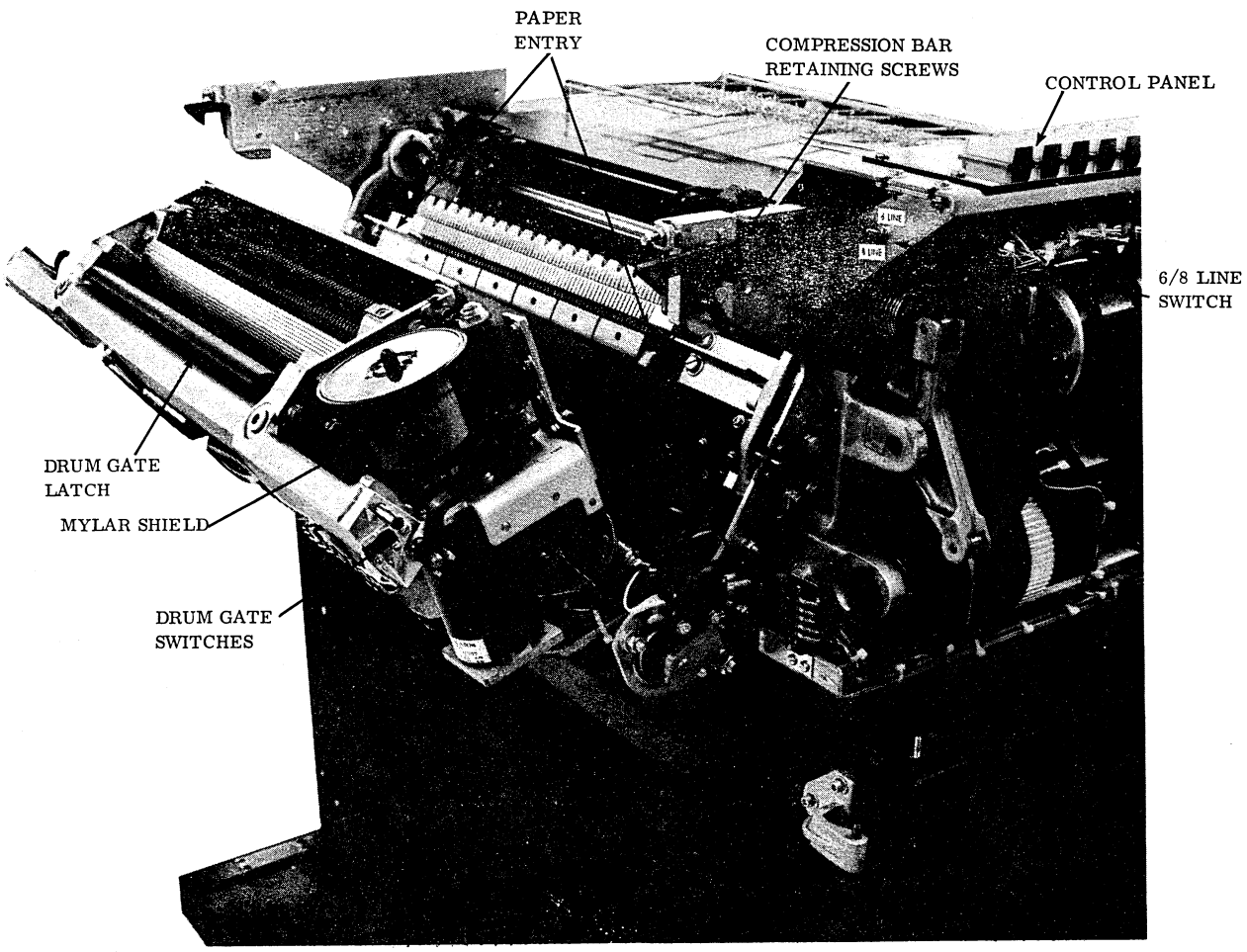

Figure 6F-11. Drum Gate Assembly Opening

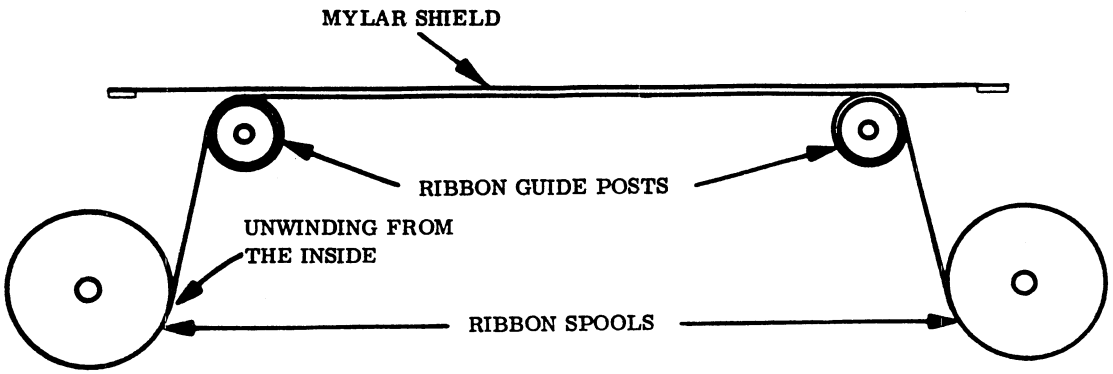

Figure 6F-12. Ribbon Installation Guide

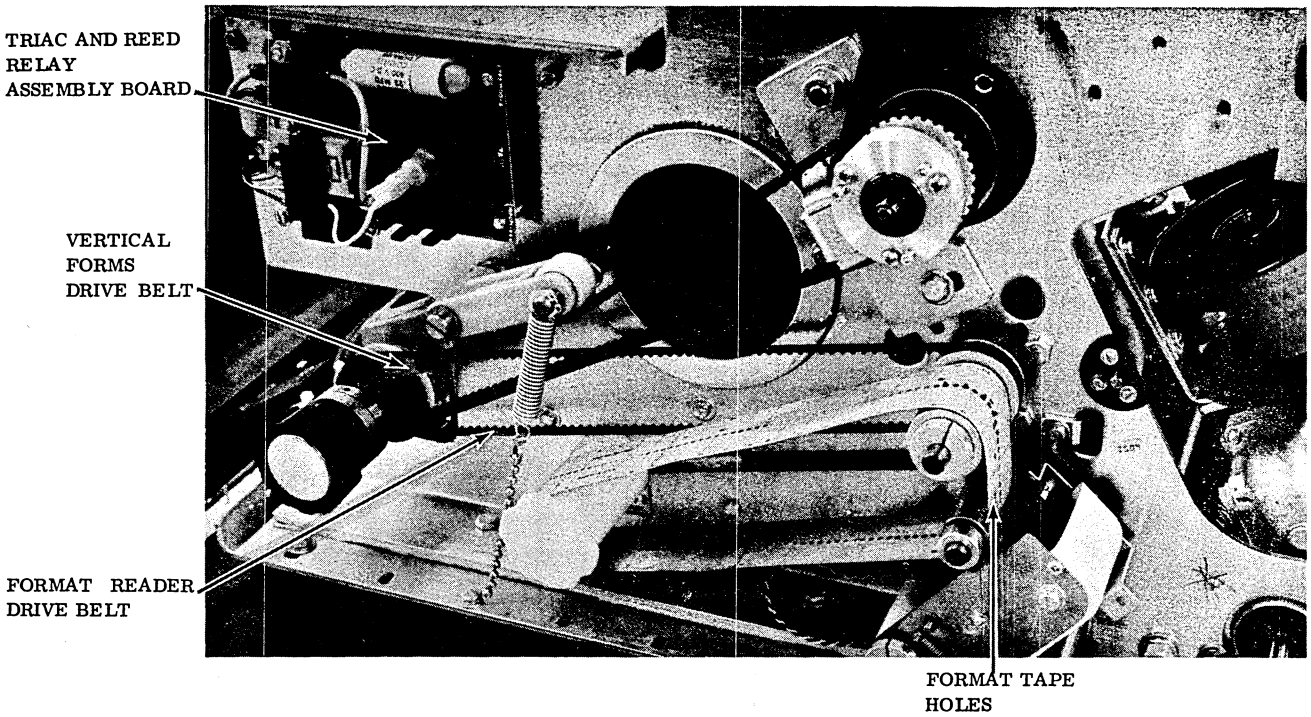

Figure 6F-13. Format Reader Assembly

TABLE 6F-2. DRIVE BELT LOCATIONS

Belt Name	Figure
Vertical forms drive belt	6F-13
Format reader drive †	6F-13
Clutch pulley drive	6F-14
Idler pulley drive	6F-14
Print drum drive	6F-15
Paper drive	6F-8

† Higher level of support needed for replacement.

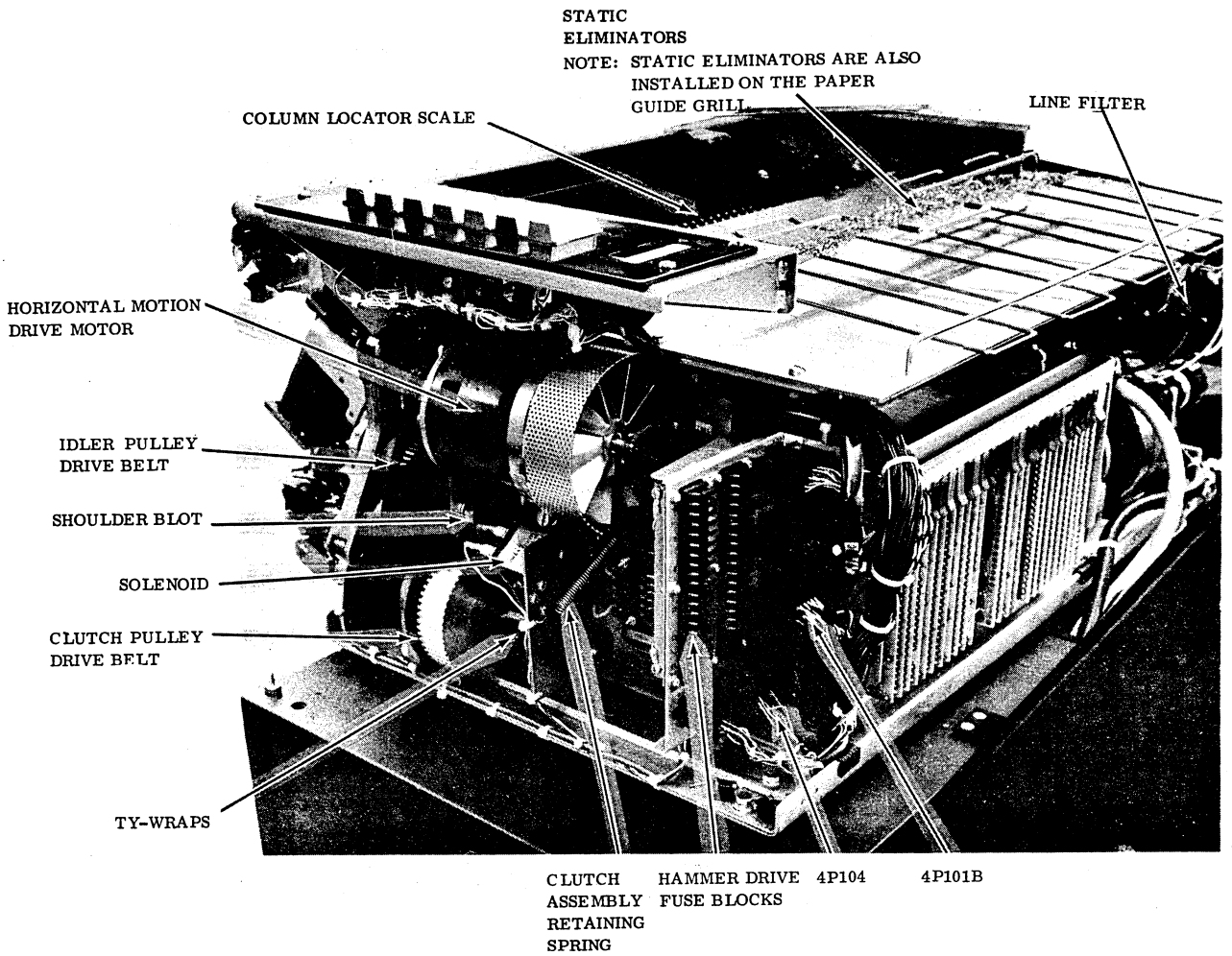

Figure 6F-14. Line Printer Chassis Side View

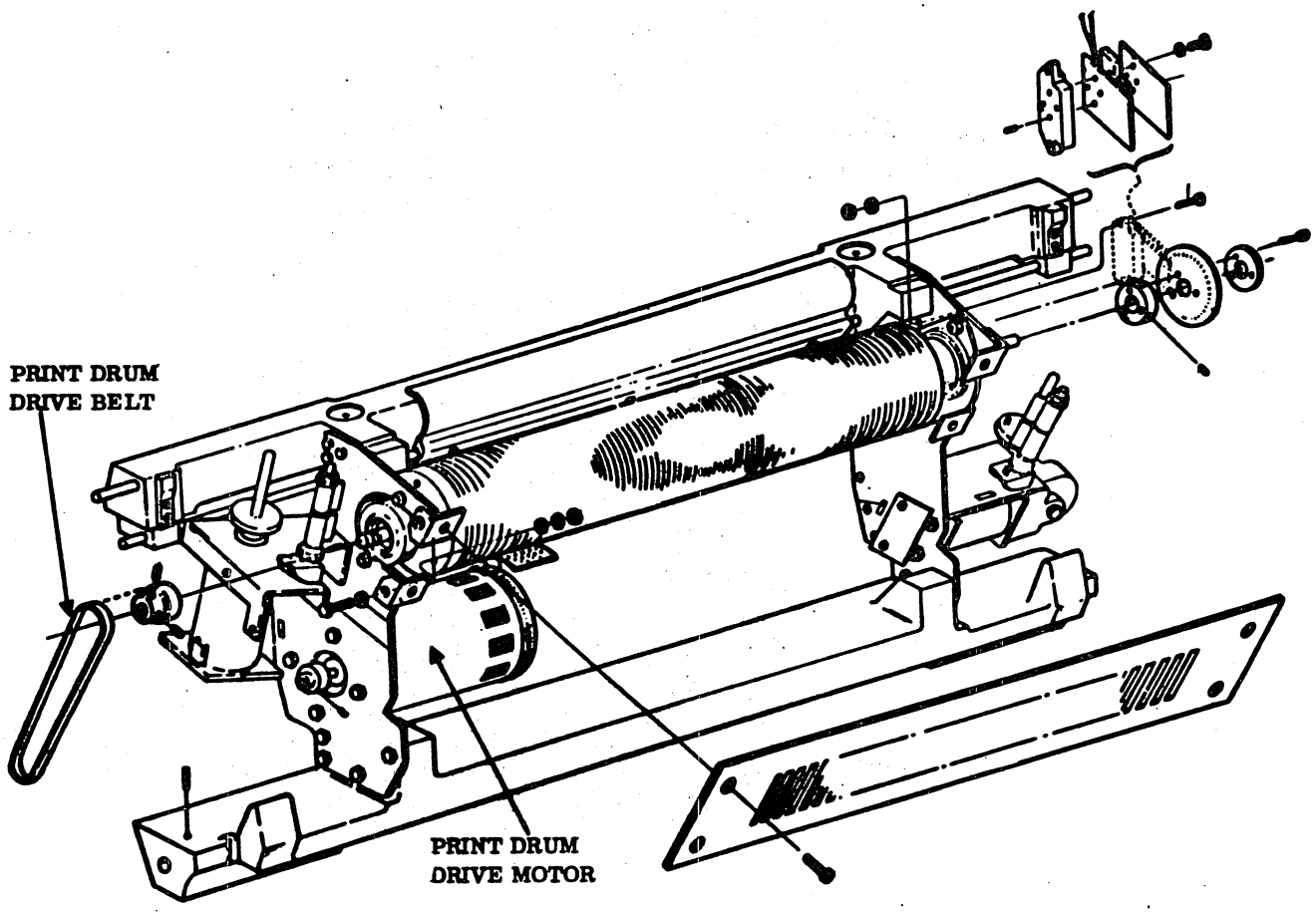

Figure 6F-15. Line Printer Print Drum Motor Drive Belt

F4 PRINT DRUM INSPECTION AND CLEANING

To inspect and clean the print drum, perform the following:

1. Turn off ac power to the line printer (procedure F2).
2. Open the front panel door of the line printer (procedure F3, step 2).
3. Remove the two screws holding the column locator scale plate and remove the plate (figure 6F-16).
4. Clean the print drum with the cleaning brush and vacuum while turning the print drum by hand. Use solvent if necessary to remove the dirt collected between print characters.
5. Reinstall the column locator scale plate.

F5 LUBRICATION

To lubricate the line printer, perform the following:

1. Turn off ac power to the line printer (procedure F2).
2. Apply one drop of light oil to each drive motor sleeve bearing lubrication hole (table 6F-3).

F6 LOADING DIAGNOSTIC

To load the line printer diagnostic, perform the following:

1. Turn on power to the line printer (procedure F1).
2. Remove the card weight from the card reader.

TABLE 6F-3. LINE PRINTER LUBRICATION

Motors to be Oiled	Figure
Horizontal motion drive	6F-17
Drum drive	6F-18

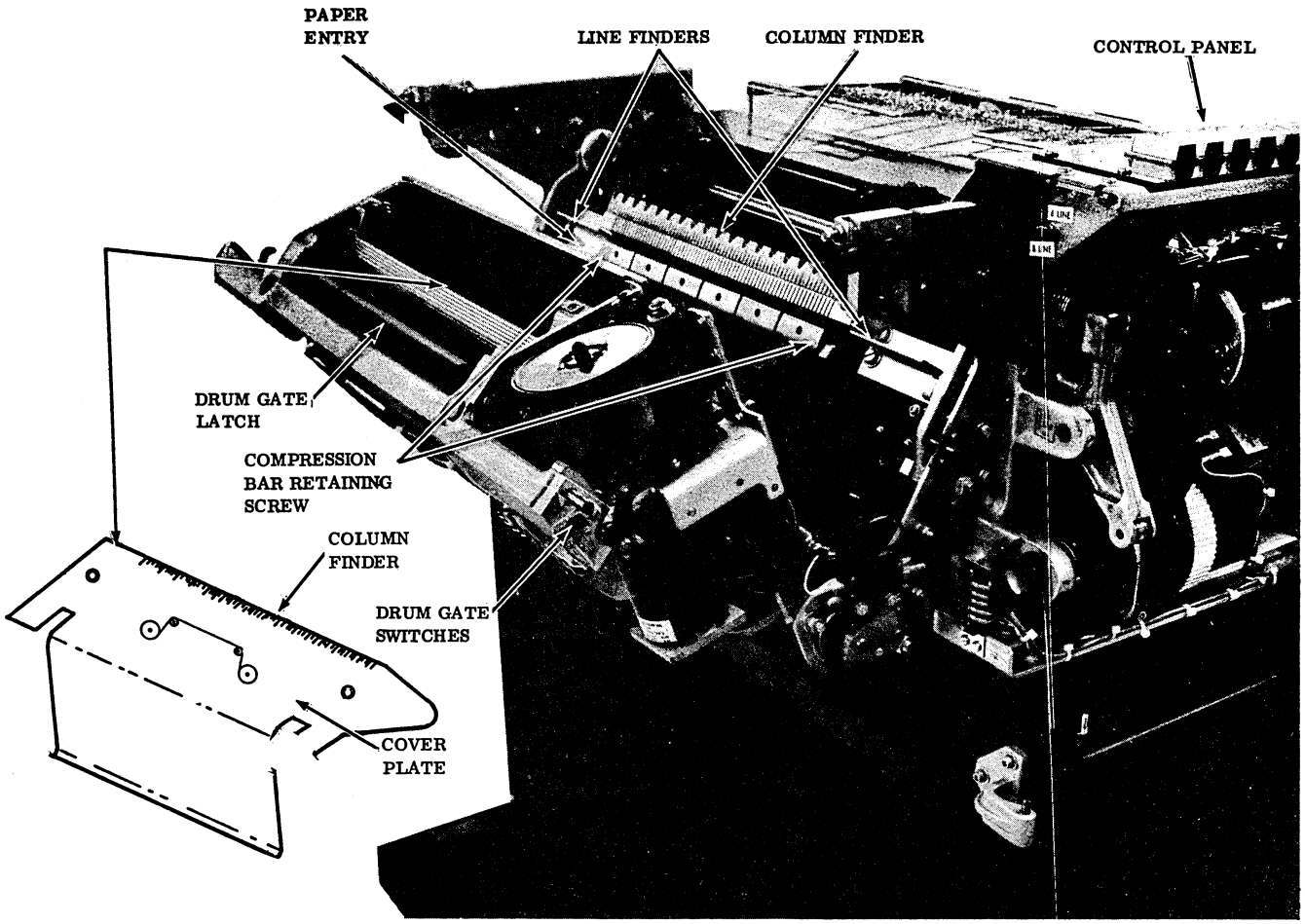

Figure 6F-16. Drum Gate Assembly Opening (Column Locator)

3. Fan both ends of the diagnostic card deck (LP408) to break the bond between the cards. Align the cards by jogging the card deck on a smooth flat surface.

4. Place the diagnostic card deck in the card reader hopper placing the cards face down with the 9-edge toward the back of the hopper.

5. Place the card weight on top of the cards. Press down lightly on the card weight.

6. Press the RESET indicator/switch. The RESET indicator illuminates and then extinguishes after 14 seconds.

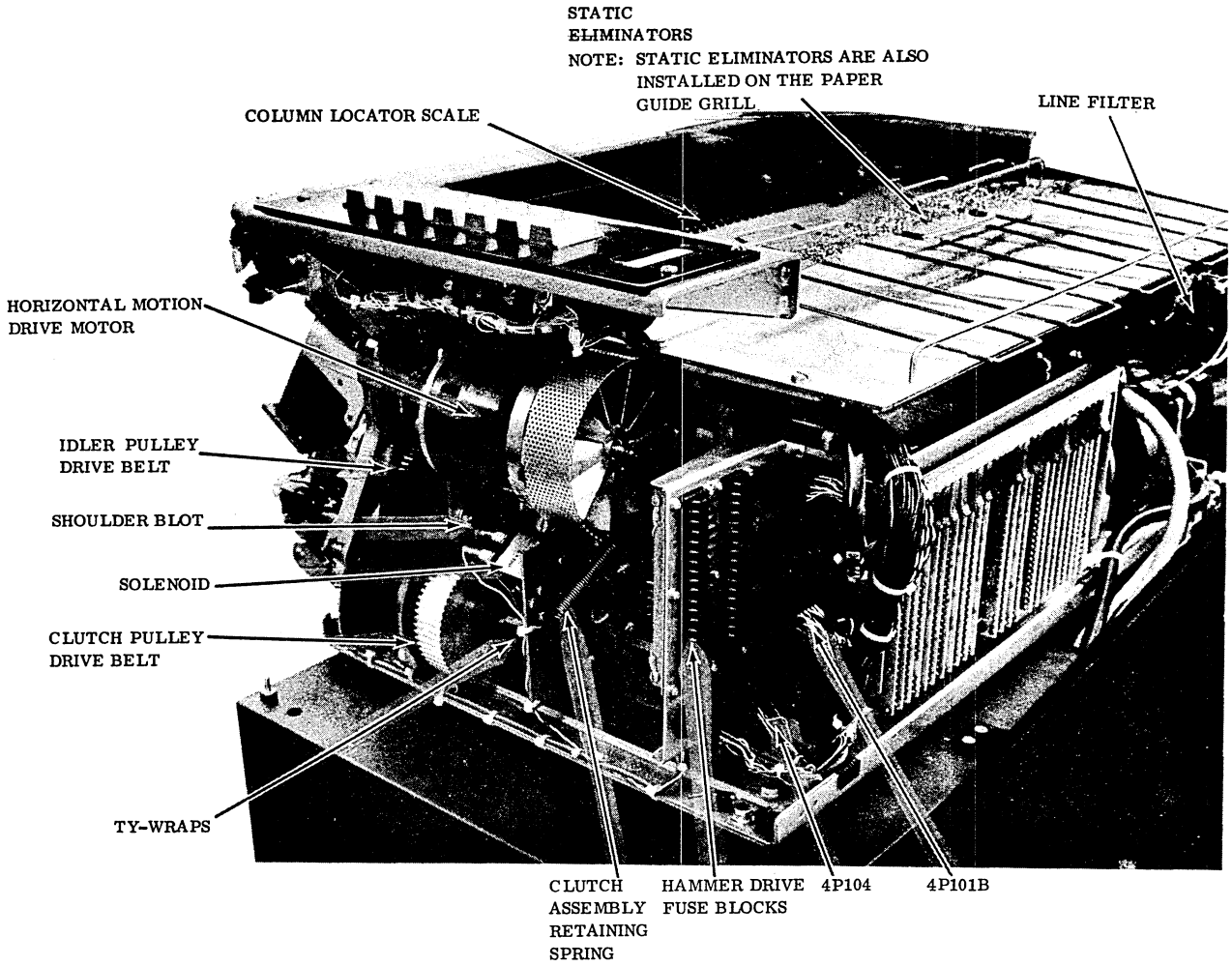

Figure 6F-17. Line Printer Chassis Side View (Lubrication)

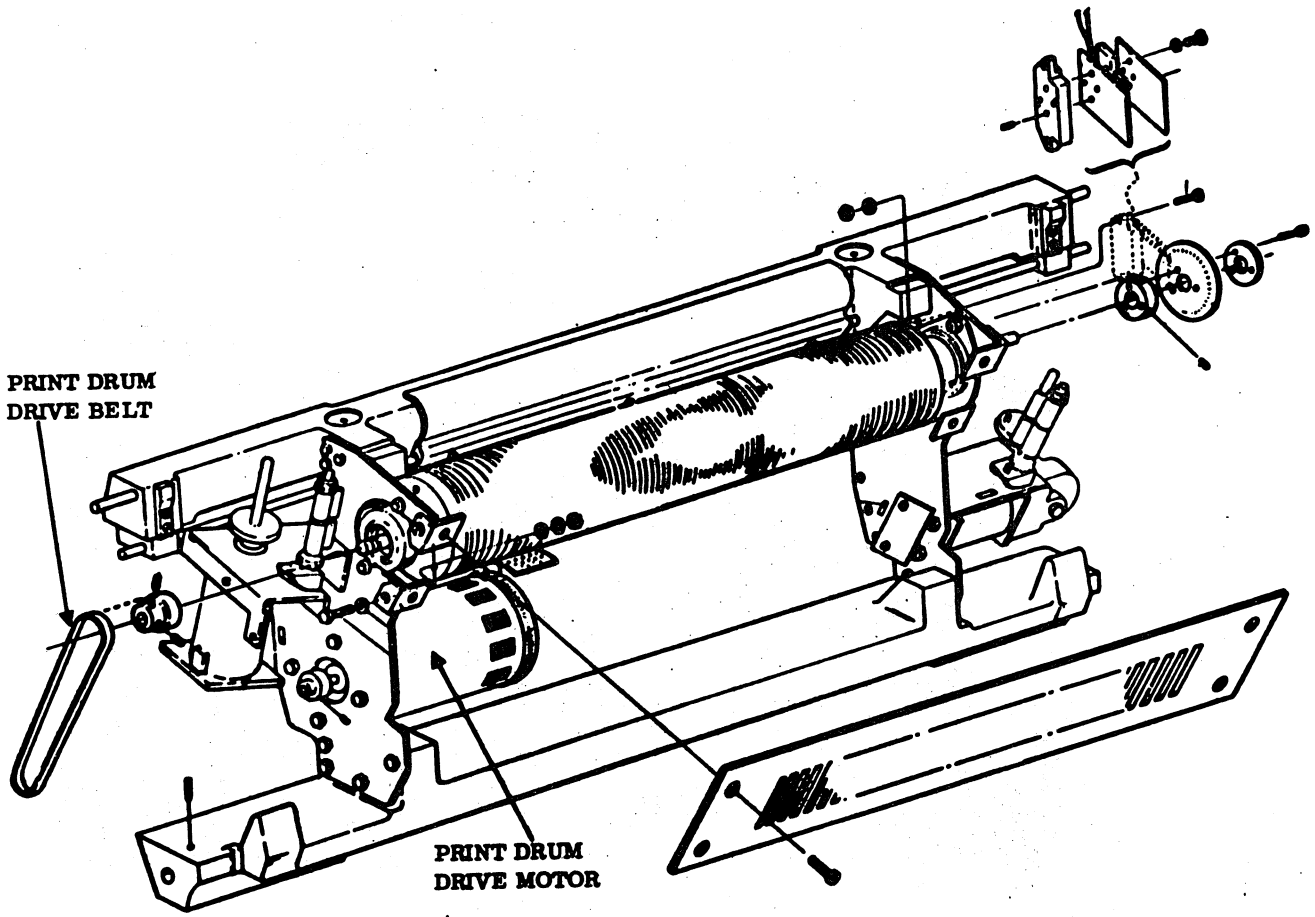

Figure 6F-18. Line Printer Print Drum Motor

F7 RIBBON INSTALLATION

To install the ribbon (part number 95330700), perform the following:

1. Open the front panel door of the line printer. Swing the drum gate assembly forward by pressing the gate latch (figure 6F-19).
2. Move the right hand edge of the Mylar shield away from the drum until it locks open (figure 6F-20).
3. Remove the old ribbon spools, if any, by lifting the spools upward. Press the gate latch to remove the left spool.
4. Clean the ink deposits from the Mylar shield and reversing posts using a solvent and a clean cloth or paper toweling.
5. Place one of the new ribbon spools on the left hand spindle so that ribbon is playing off the inside of the spool (figure 6F-20).
6. Route the ribbon around the left hand guide post and between the Mylar shield and the drum assembly.
7. Route the ribbon around the right hand guide post and install the second ribbon spool on the right hand spindle (figure 6F-20).
8. Turn the right-hand spool counterclockwise until all slack is removed from the ribbon.
9. Make sure the ribbon is centered on the guide posts and the ribbon spools are locked on the ribbon spool shafts.
10. CLose the Mylar shield assembly.
11. Return the gate drum assembly to its latched position by pushing the assembly forward.

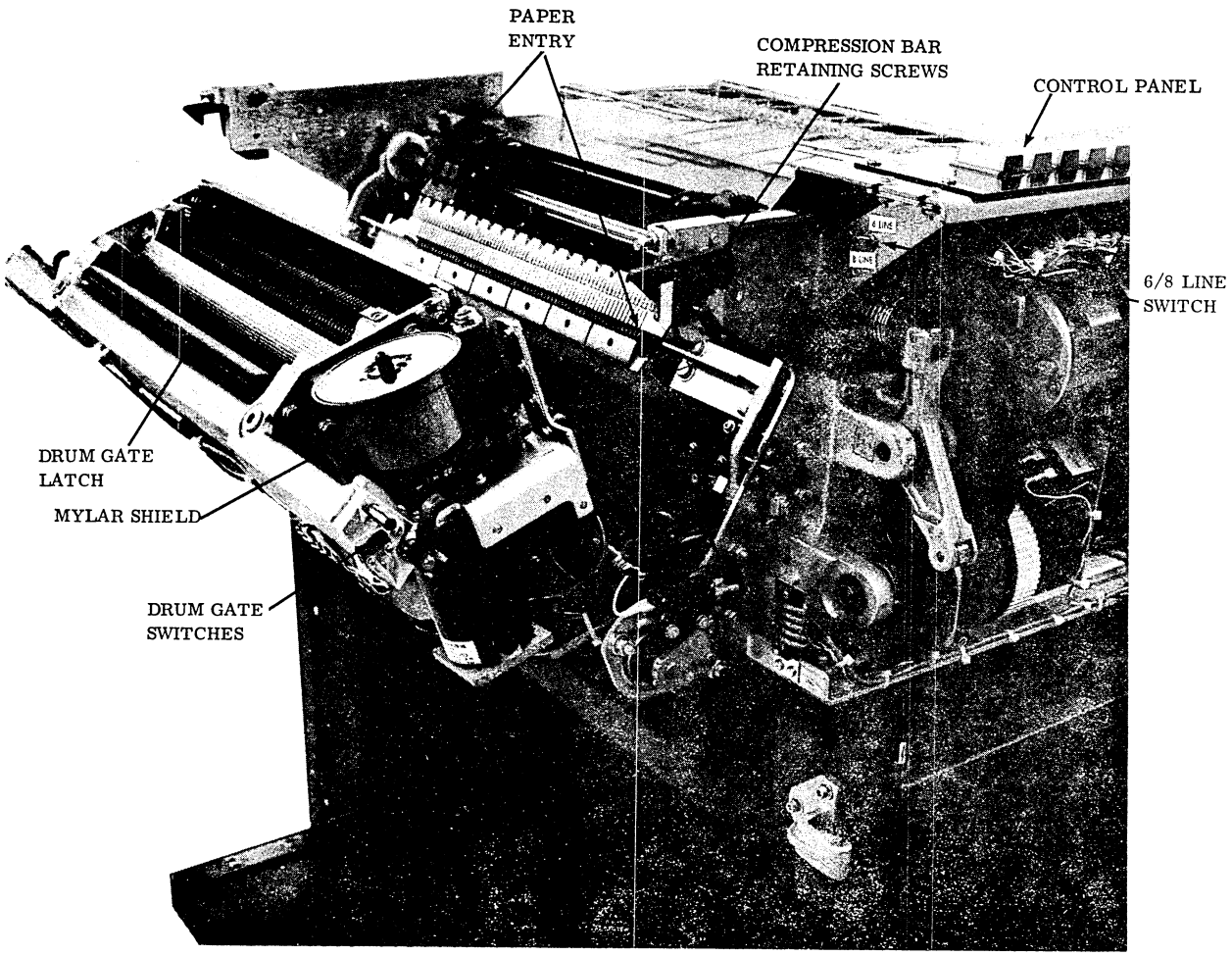

Figure 6F-19. Line Printer Drum Gate Assembly

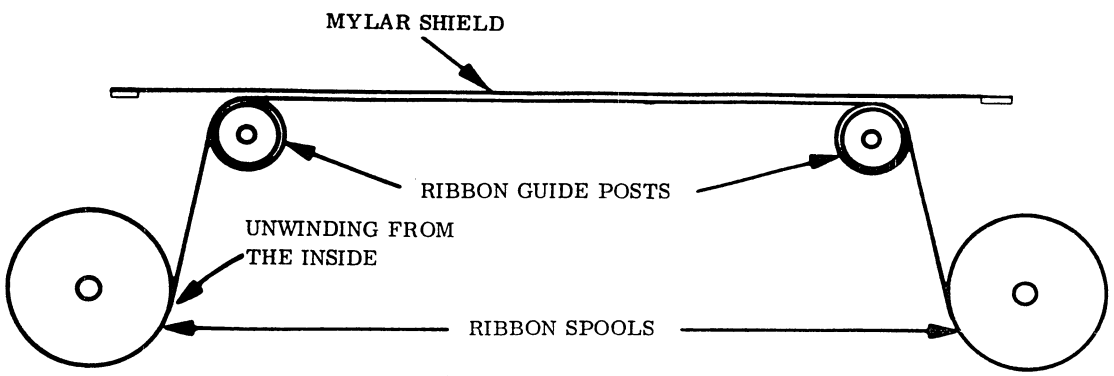

Figure 6F-20. Line Printer Ribbon Installation Guide

F8 FORMS INSTALLATION/ALIGNMENT

To install and align the line printer paper, perform the following:

1. Open the front line printer access door.
2. Place the line printer paper inside the line printer, directly below the print station.
3. Turn power on to the line printer (procedure F1).
4. Install the format tape (procedure F9), and then press the PAGE EJECT switch. This sets the tractors to the first line of the print position and horizontally aligns the tractor shaft to the column finder scale.
5. Raise the access window and open the drum gate. The forms should then be routed between the drum gate and the print mechanisms (figure 6F-21).
6. Open the left-hand and right-hand tractor flaps and install the forms. The tractor should then be positioned so that column 1 on the column finder is aligned to the desired position of print column 1 on the forms and so that line 1 of the print forms is aligned with the line finders (figure 6F-21).
7. Paper tension is applied by a slight outward force exerted on the paper by the tractor sprockets. This tension is important for proper feeding of the paper.

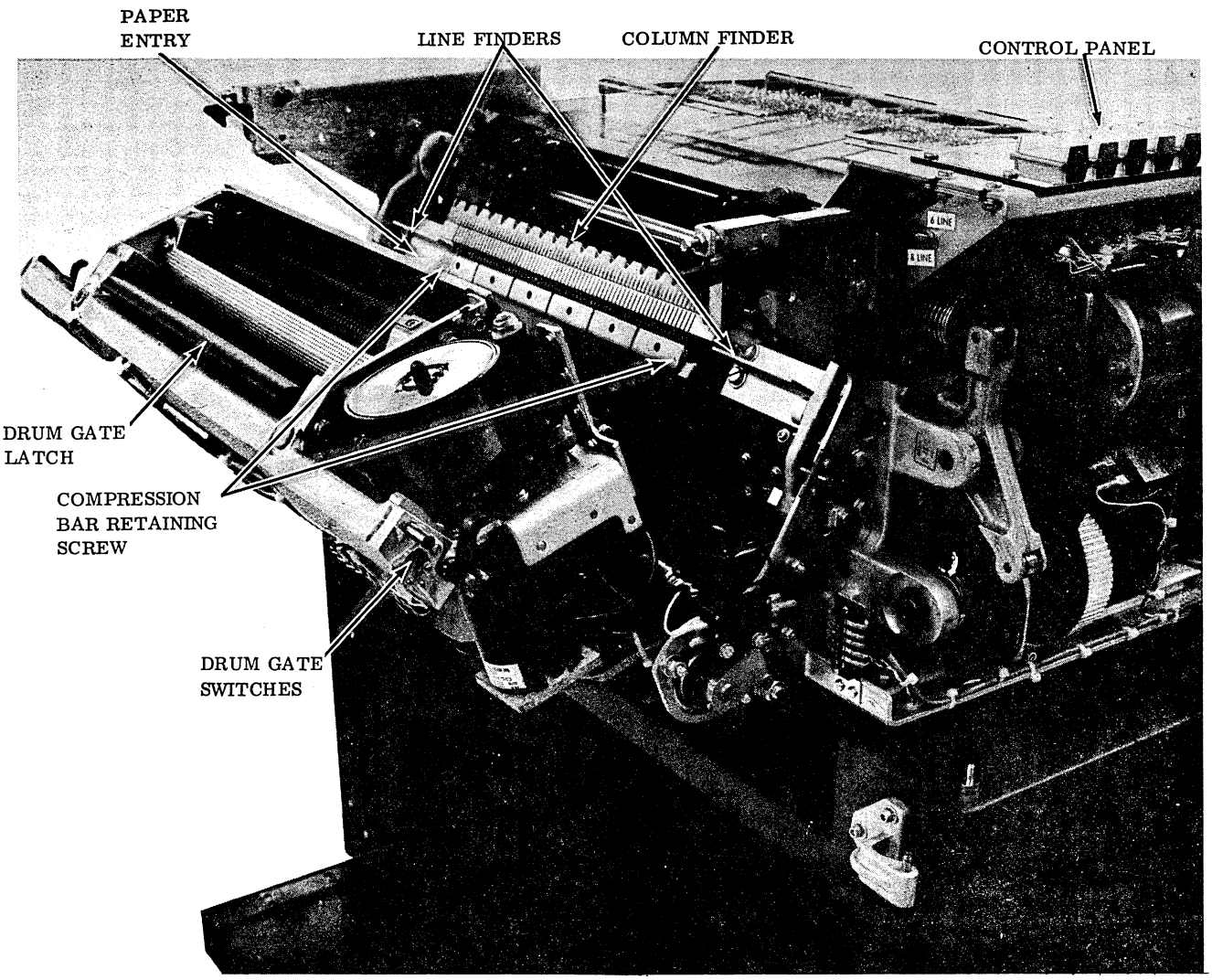

Figure 6F-21. Line Printer Drum Gate Assembly (Paper Alignment)

8. Make the line printer perform two top-of-forms functions by pressing the PAGE EJECT switch on the control panel twice. This allows enough forms leader so that the forms can be routed out the rear of the line printer.

9. Close the drum gate and press the PAGE EJECT switch again. Check that the feed holes of the form have not torn. If they have, the forms paper stack below the print drum should be repositioned, or the paper tension exerted by the tractor sprockets needs to be reduced. Turn the locking horizontal positioning control knob in the direction of the arrow and hold it while positioning the tractor assembly (figure 6F-22).

10. Close the access window and the front access door. The forms are now ready for printing.

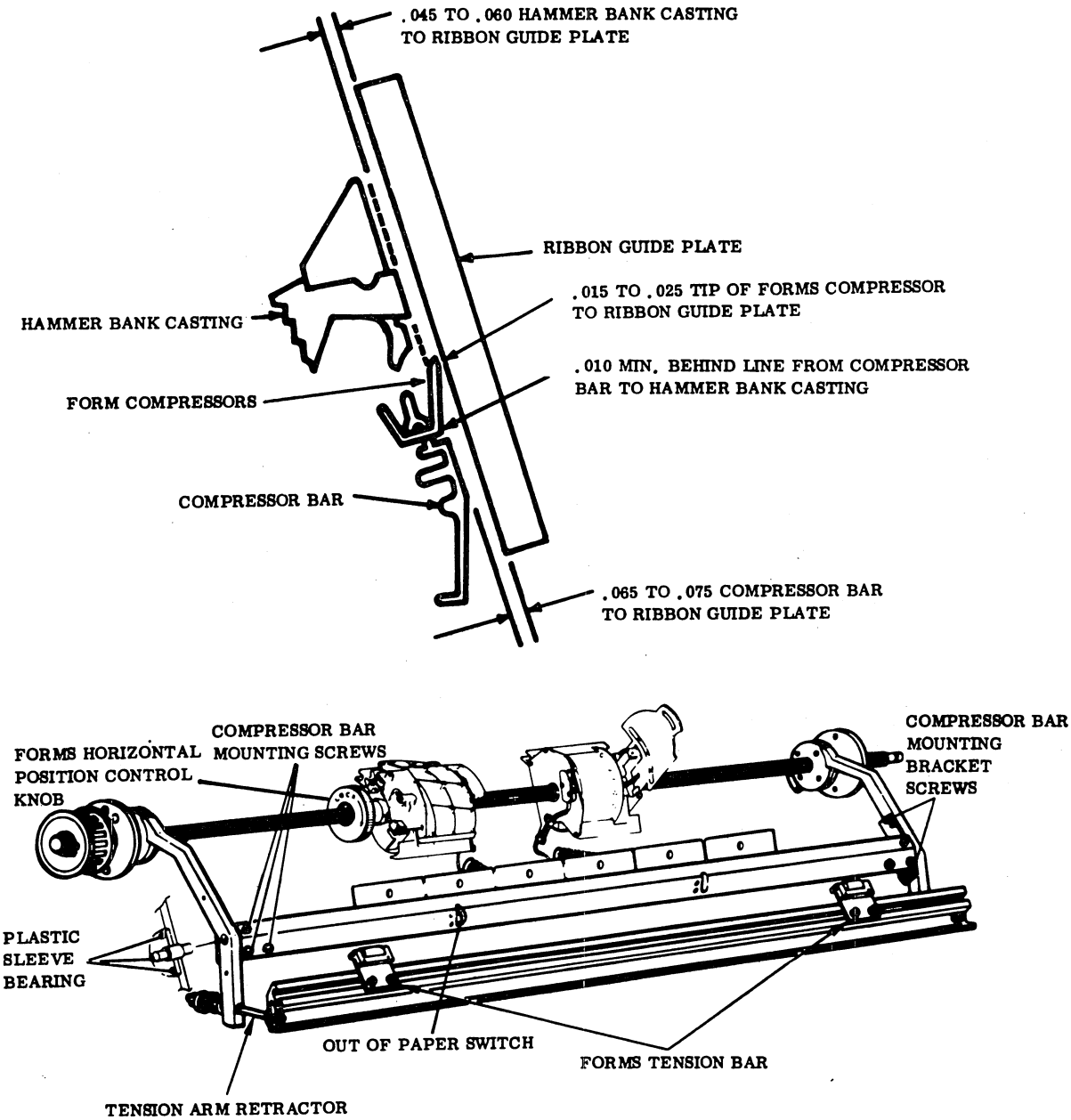

Figure 6F-22. Line Printer Paper Path and Compressor Bar Alignment Guide

F9 FORMAT TAPE INSTALLATION

To install the format tape (part number 44713801), perform the following:

1. Turn off ac power to the line printer (procedure F2).
2. Remove the paper guide grill at the rear of the line printer.
3. Swing the line printer top panel cover open.
4. Unlatch the format reader by pressing down on the latch (figure 6F-23).
5. Turn the tension roller counterclockwise to loosen the tension on the old format tape.
6. Remove the old format tape.
7. The tape is marked channels 1 through 12. Position the new format tape on the drive sprocket so that channel 1 of the tape is on the inside toward the chassis. (See procedure F47 when preparing new tape.)
8. Install the new format tape on the drive sprocket so that the red coincidence dot on the sprocket is aligned with a coincidence line on the format tape (figure 6F-23).
9. Loop the format tape around the contact roller and tension roller.
10. Slide the tension roller toward the rear of the line printer until the slack is removed from the format tape (allow a slight play). Tighten the tension roller by turning the knob clockwise.
11. Close the format reader by raising the reader back to the contact roller until it is latched.

F10 POWER SUPPLY DC VOLTAGE TEST

To test the power supply dc voltage, perform the following:

1. Remove the paper guide grill at the rear of the line printer.
2. Swing the line printer top panel cover open.
3. Turn on ac power to the line printer (procedure F1).
4. Using a multimeter set to the 50 V dc range, connect the negative probe to test point 26 (logic ground) of the logic circuit board in logic chassis slot 27.
5. Connect the positive probe of the multimeter to the 36 V dc brass bus bar at the rear of the hammer driver fuse block (figure 6F-24). The voltage read should be 36 V dc but is allowed to be as high as 38 V dc or as low as 33 V dc.

NOTE

If no voltage is measured, refer to procedure F13. If the voltage measured is not within the allowable limits, replace the power supply (procedure F11).

6. Remove the positive probe and set the multimeter to the 10 V dc range.

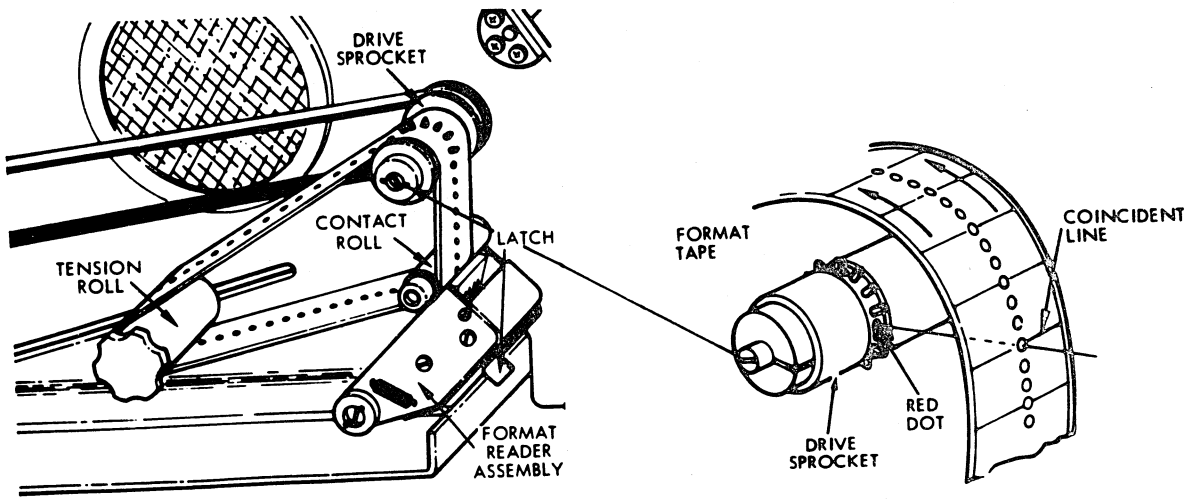

Figure 6F-23. Line Printer Format Tape Installation Guide

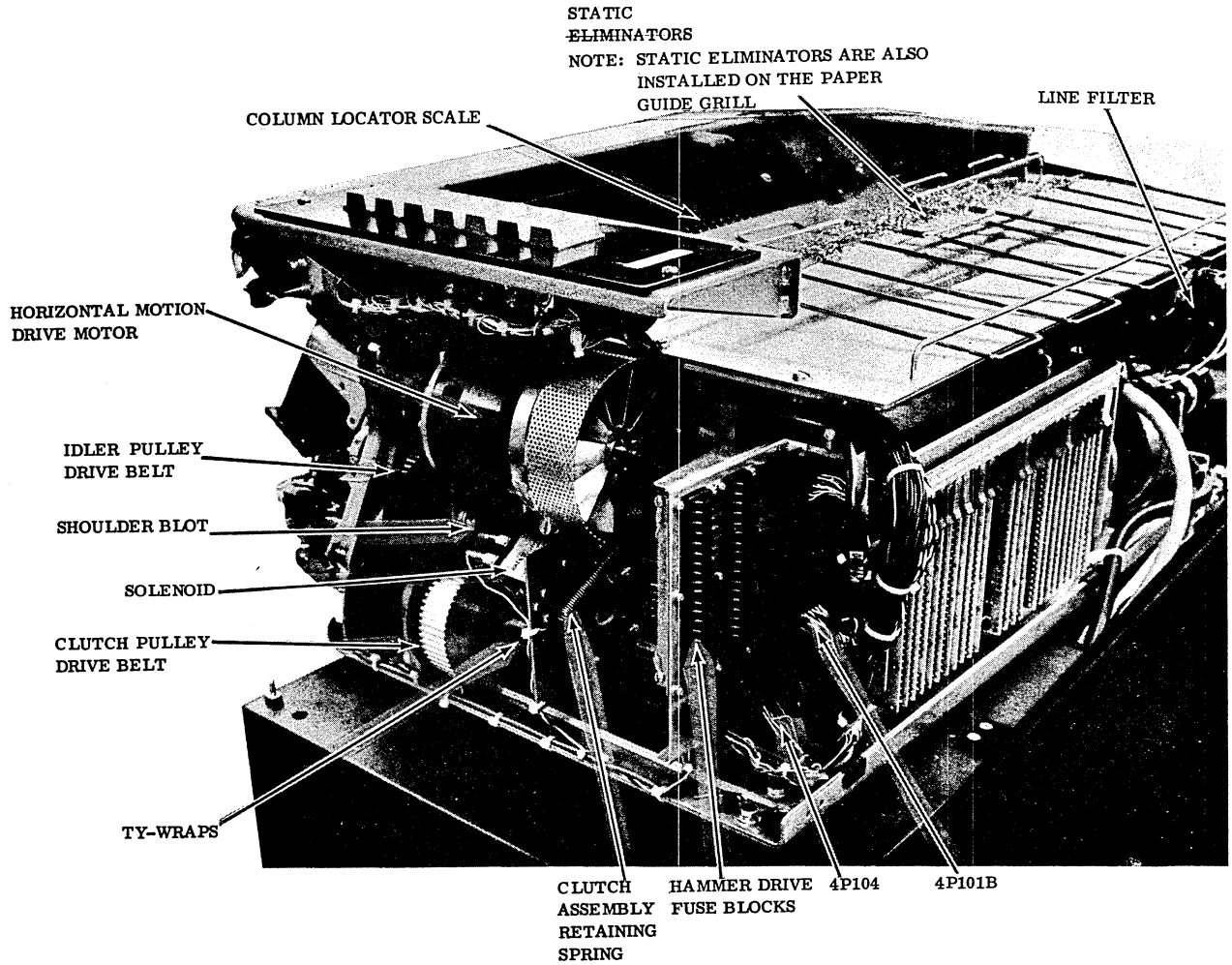

Figure 6F-24. Line Printer Chassis Side View (Power Supply Test Points)

7. **Connect the positive probe to pin 1 (the pin location inscribed on the connector) of connector/plug 4P104 (figure 6F-24). The voltage read should be 5 V dc but can be as high as 5.3 V dc or as low as 4.7 V dc.**

NOTE

Do not disconnect the plug. Place the positive probe between the wire and the connector at pin 1.

If no voltage is measured, refer to procedure F13. If the voltage measured is not within the allowable limits, adjust the voltage (procedure F36).

8. **Disconnect the positive and negative meter probes.**

9. **Connect the positive probe of the meter to the logic circuit board ground (test point 26, slot 27).**

10. **Set the multimeter to read 20 V dc.**

11. **Connect the negative meter probe to connector/plug 4P101B, pin 35 (on the left side of the connector, third pin from the top). The voltage reading should be 12 V dc but can be as high as 13.2 V dc or as low as 10.8 V dc.**

NOTE

Do not disconnect the plug. Place the negative probe between the wire and the connector at pin 35. If no voltage is measured, refer to procedure F13. If the voltage measured is not within the allowable limits, replace the power supply (procedure F11).

12. **Disconnect the multimeter probes and restore the line printer cover panel and paper guide grill.**

F11 POWER SUPPLY REPLACEMENT

To replace the power supply, perform the following:

1. Disconnect the ac power cord of the line printer from the site power outlet.
2. Remove the paper guide grill at the rear of the line printer.
3. Swing the top cover panel of the line printer until it is fully open.
4. Open the front access door.
5. Open the drum gate assembly.
6. Open the right and left tractor flaps on the tractor shaft and remove the forms.
7. Remove the two screws holding the paper guide plate (figure 6F-25) and remove the guide plate.
8. Disconnect hammer assembly cables 4P105, 4P106, 4P107, and 4P116 (located at the right of the card cage). Carefully pull these cables forward, allowing slack away from the power supply assembly.
9. Remove the four screws holding the paper plate assembly.
10. While facing the front of the line printer, remove the right-hand Phillips head screw located in the center of the paper plate assembly.
11. Carefully lift the paper plate assembly up away from the line printer and remove the cables from the quick disconnect cable clamps mounted underneath the paper plate assembly.
12. Remove the remaining Phillips head screw on top of the paper plate assembly connected to the capacitor bracket and remove the bracket. Place the capacitor on top of the resistor rack.

CAUTION

Do not disconnect the capacitor. Remove the paper plate assembly from the line printer.

13. Disconnect 4J100, 4J101A, 4J101B, 4J102, 4J104, and 4J103 from the connectors at the left of the card cage assembly.
14. Remove the two screws at the base of the card cage and carefully pull the card cage out away from the power supply.
15. Disconnect the ground strap running from the power supply to the capacitor bank located below the power supply.
16. Remove the two screws holding the power supply assembly.

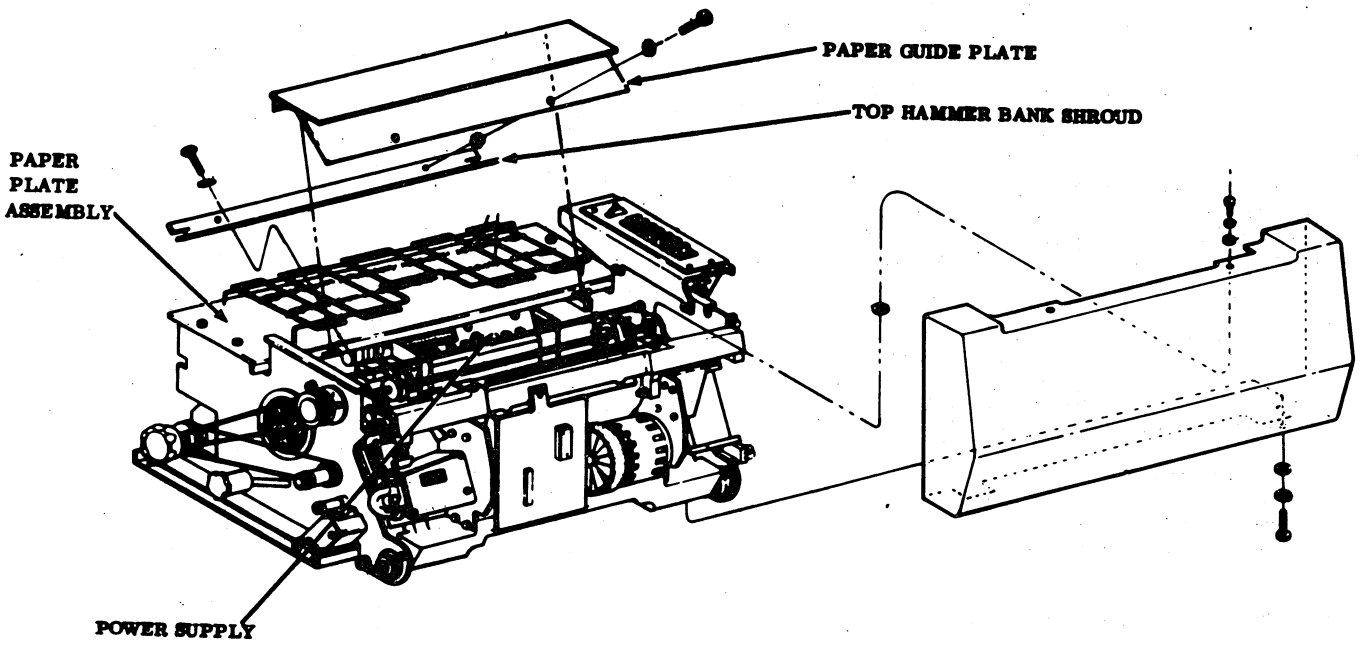

Figure 6F-25. Line Printer Power Supply Replacement Guide

17. Remove and label as to terminating location each wire connected to the power supply assembly.

18. Remove the power supply assembly and install the new power supply assembly.

19. Reconnect each wire to the power supply assembly according to the tagged terminating location of each wire.

20. Perform the above in a reverse order starting with step 16 and ending with step 1.

F12 AC POWER TEST

To test ac power, perform the following:

1. Disconnect the ac power cord of the line printer from the site outlet.

2. Remove the paper guide grill at the rear of the line printer.

3. Swing the top cover panel of the line printer until it is fully open.

4. Remove the two nuts holding the terminal cover plate of TB01 and TB02 on the Triac and reed relay circuit board (figure 6F-26).

5. Connect the negative probe of a multimeter set at the 200 V ac scale to the center terminal of the RFI filter (figure 6F-27). (Pull down the rubber protective cover.)

6. Connect the positive probe to the Triac and reed relay board terminal TB01-1.

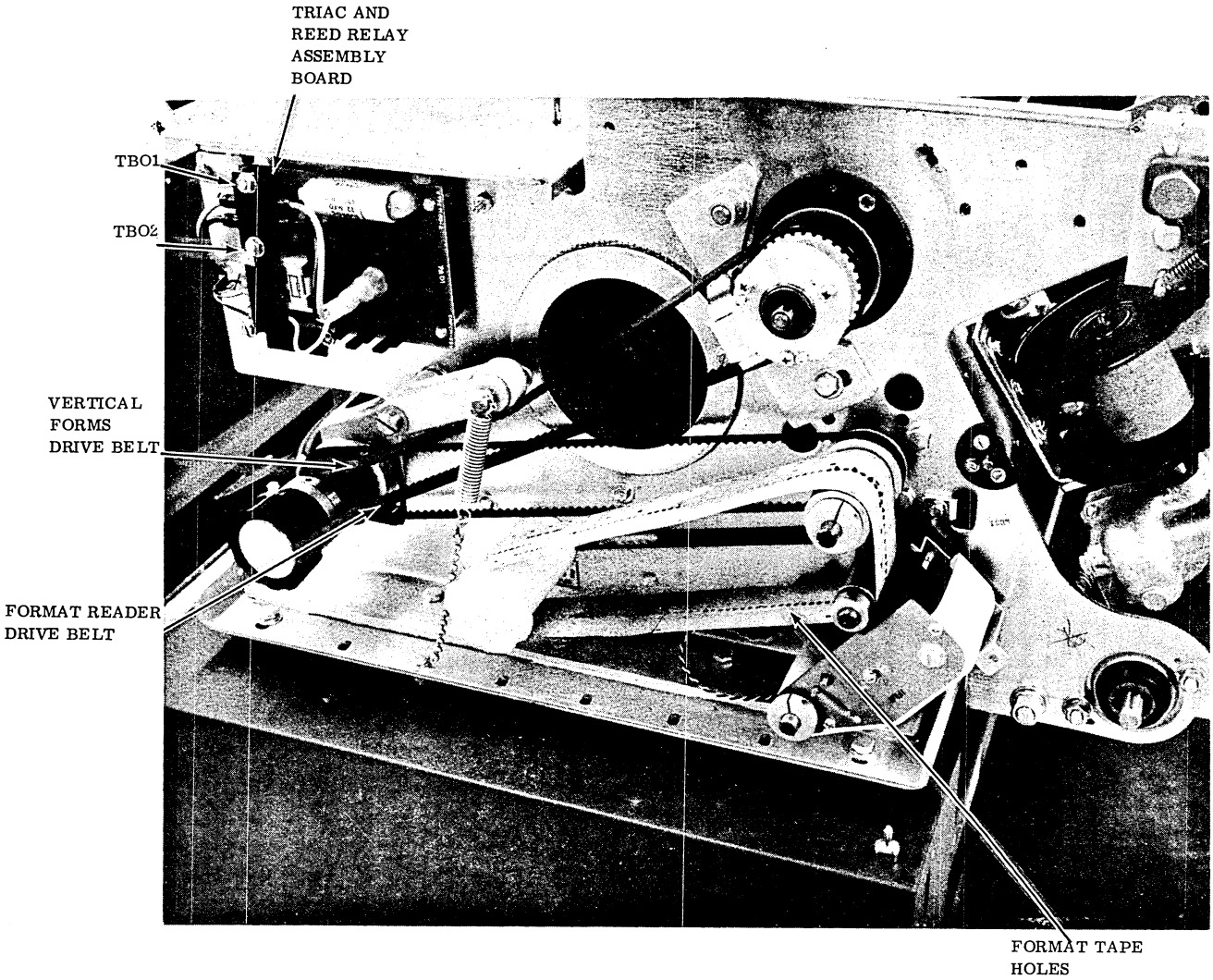

Figure 6F-26. Format Reader Assembly (115 V ac Test Points)

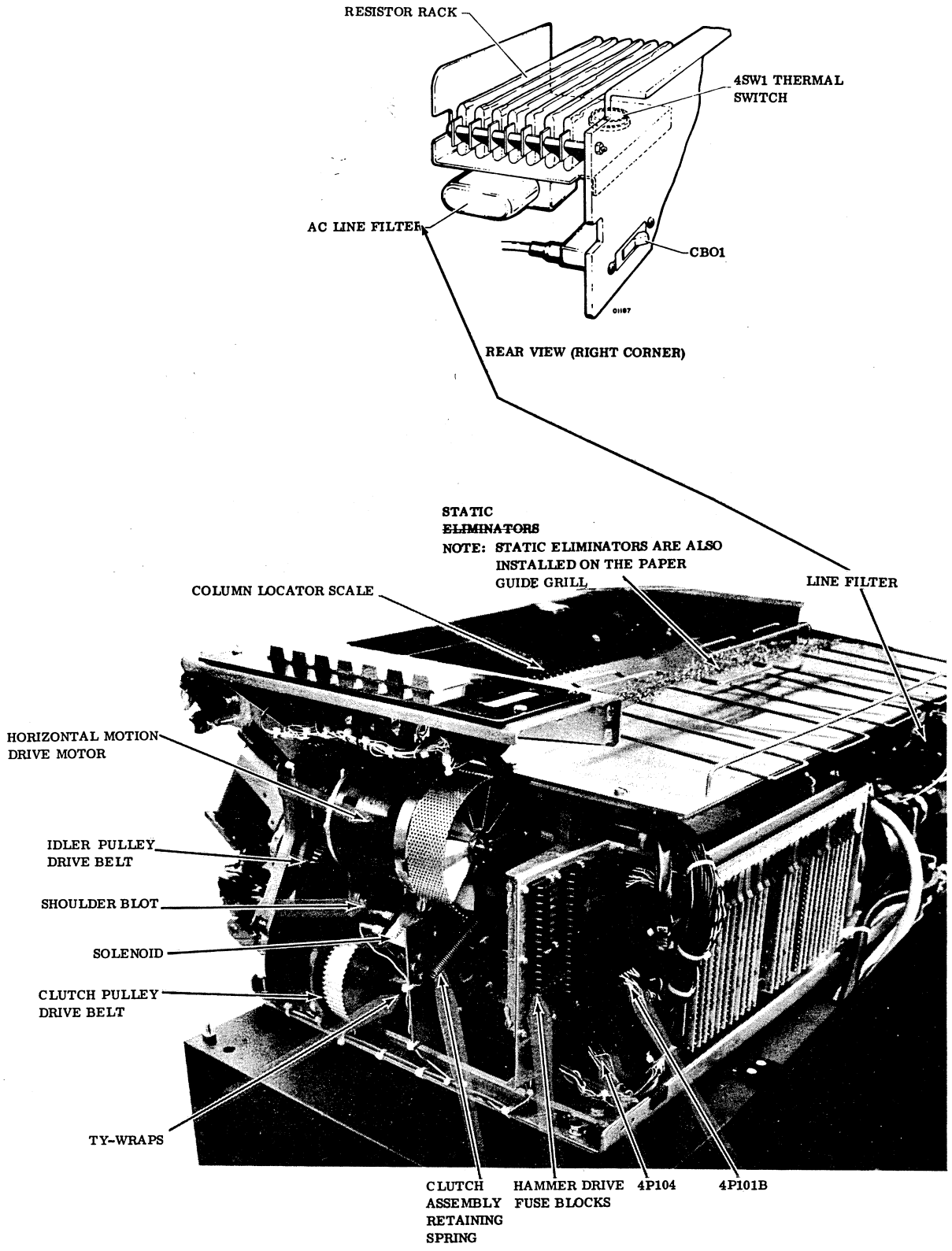

Figure 6F-27. Line Printer Chassis (Line Filter)

7. Connect the ac power cord of the line printer to the site outlet. The multimeter should read 117 V ac ±10%.

NOTE

If the meter does not read 117 V ac ±10% and the circuit breaker CB01 is in the on position, perform step 1 and replace CB01.

8. Disconnect the meter probe from TB01-1 and connect the probe to TB01-2.

9. Press and do not release the POWER ON switch on the control panel of the line printer. The meter should read 117 V ac ±10%.

NOTE

If the meter does not read 117 V ac ±10%, replace the triac and reed relay board assembly (procedure F18).

10. Verify also that while the POWER ON switch is pressed, the POWER ON and STOP switch indicators are illuminated.

NOTE

If these switches are not illuminated, release the POWER ON switch and press the POWER OFF switch. Perform procedure F13.

11. Disconnect the positive multimeter probe from TB01-2.

12. With the multimeter set to the 10 V dc range, connect the positive multimeter probe to TB02-3 on the triac and reed relay board. The meter should read 1 ±0.2 V dc.

NOTE

If the multimeter does not read 1 ±0.2 V dc, replace the ribbon drive circuit board in logic chassis slot location 13. Repeat step 12. If 1 V dc again cannot be read, replace the thermal switch (procedure F35) and repeat step 2.

13. Disconnect the positive probe multimeter from TB02-3.

14. Release the POWER ON switch, press the POWER OFF switch, and disconnect the ac power cord from the site outlet.

15. With the multimeter set to the X1K resistance range and the negative probe on the center terminal of the RFI filter, connect the positive probe of the meter to connector/plug 4J100 pin 7 while the connector and the plug of 4J100 are attached. The multimeter should read continuity.

NOTE

If the multimeter does not read continuity, replace the POWER ON switch (procedure F22).

16. Press the POWER ON switch while performing step 15. The multimeter should read continuity.

NOTE

If the meter does not read continuity, replace the POWER ON switch (procedure F22).

17. Restore the line printer to normal operation.

F13 POWER SUPPLY FUSE TEST

To test the power supply fuse, perform the following:

1. Disconnect the ac power cord of the line printer from the site outlet.

2. Remove the paper guide grill at the rear of the line printer.

3. Swing the top cover panel of the line printer until it is fully open.

4. Open the front access door.

5. Open the drum gate assembly.

6. Open the right and left tractor flap on the tractor shaft and remove the forms.

7. Remove the two screws holding the paper guide plate (figure 6F-28) and remove the guide plate.

8. Remove and test each fuse in turn and remove a fuse by turning the cap counterclockwise.

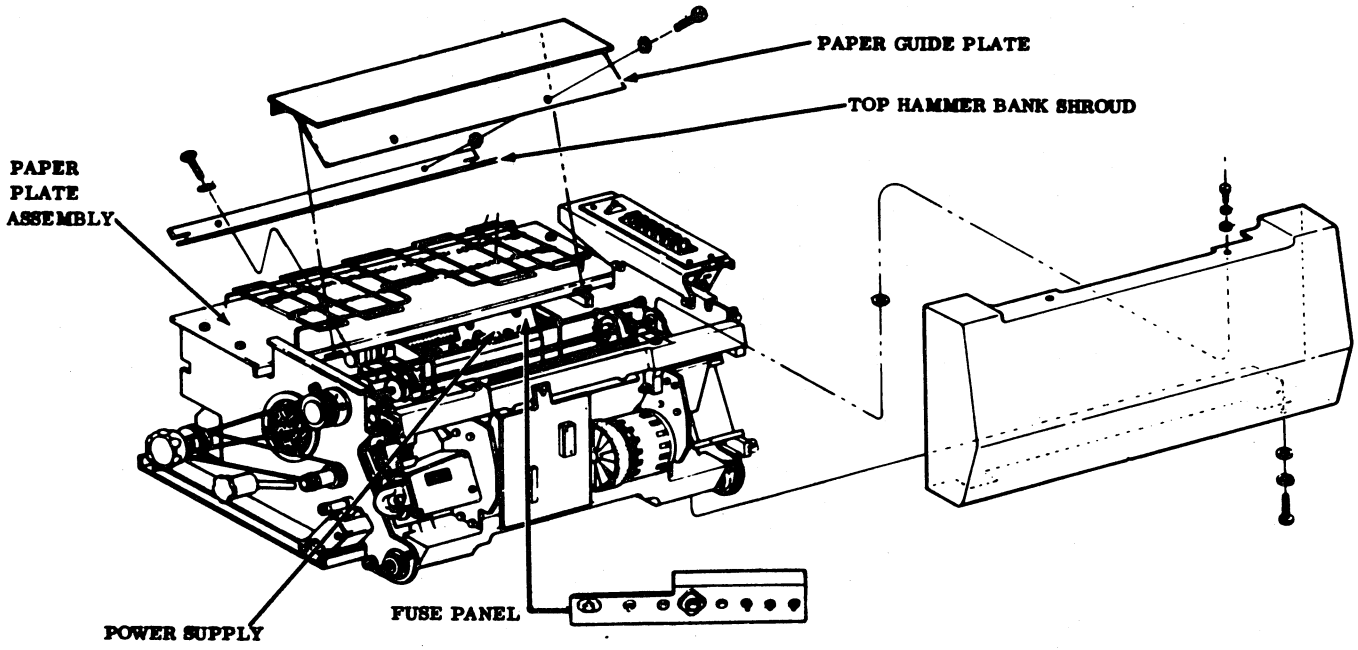

Figure 6F-28. Line Printer Power Supply Fuse Replacement Guide

9. Once the fuse is removed, measure its continuity by setting the multimeter to the X1 resistance range and connecting the meter probes to each end of the fuse.

NOTE

If the multimeter does not indicate continuity, replace the fuse as follows:

Location	Amperes	Part Number
5F03	15	95647609
5F01	15	95586430
5F02	1	95647601

10. Replace the bad fuse with the correct ampere fuse as indicated above.

11. If all original fuses are good, replace the power supply assembly (procedure F11).

12. Restore the line printer to its normal operation by performing steps 7 through 1.

F14 MYLAR RIBBON SHIELD REPLACEMENT/ALIGNMENT

To replace and align the Mylar ribbon shield (part number 50994401), perform the following:

1. Turn off power to the line printer (procedure F2).

2. Open the front panel access door of the line printer. Swing the drum gate assembly forward by pressing the gate latch and remove the ribbon (figure 6F-29).

NOTE

If doing alignment only, skip steps 3 and 4.

3. Remove the three screws at each end of the Mylar mounting brackets and remove the Mylar ribbon shield.

4. Replace the old shield with a new one (part number 50994401) and replace the three screws at each end of the Mylar mounting bracket. Do not tighten these screws.

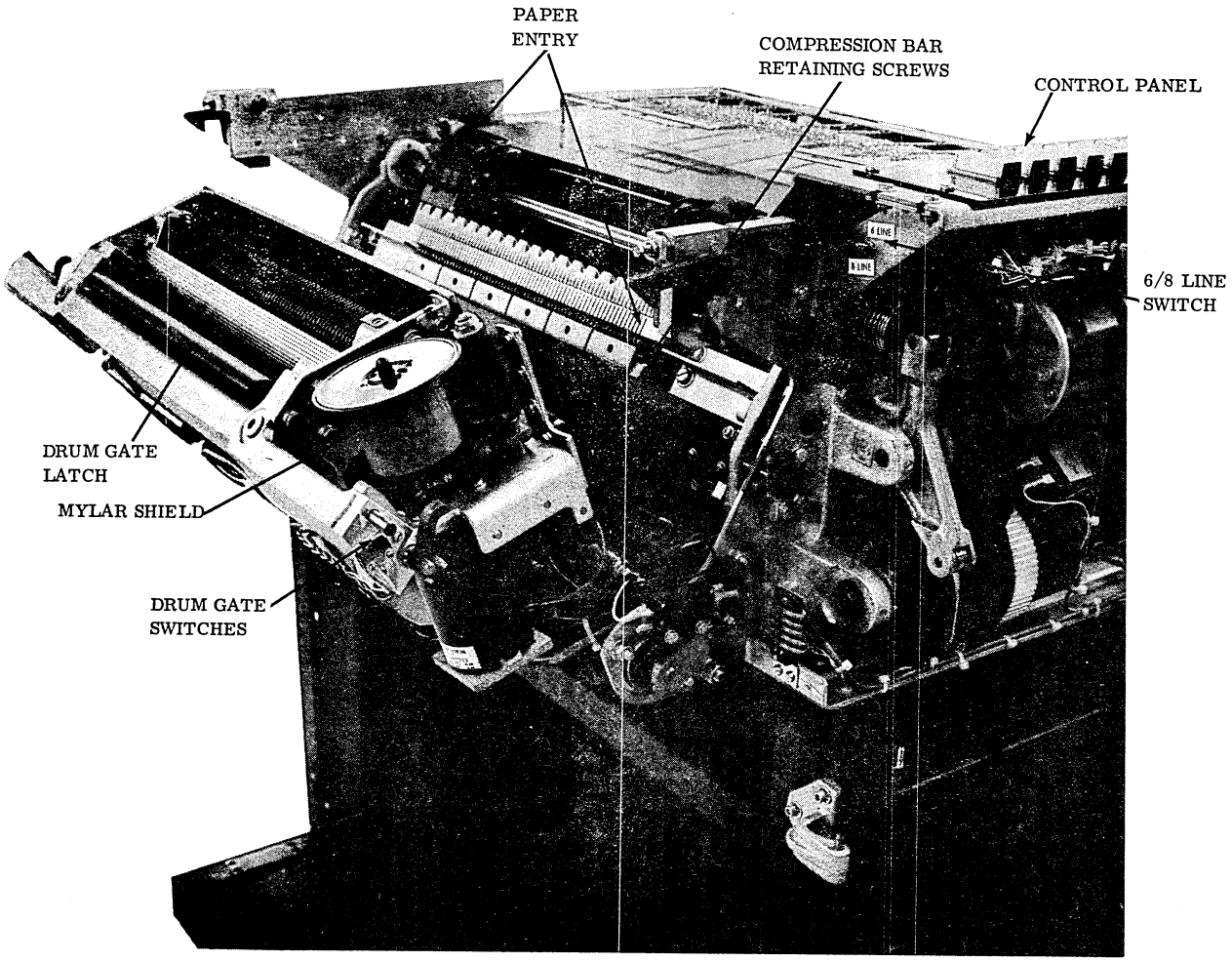

Figure 6F-29. Line Printer Drum Gate Assembly Opening

5. Facing the line printer, loosen the two mounting screws holding the left Mylar mounting bracket to the frame, move the bracket in toward the back of the line printer, and tighten the two screws (figures 6F-29 and 6F-30).

6. Loosen the three screws at each end of the Mylar, align the Mylar over the ribbon plate holes, and tighten both ends, keeping the Mylar stretched tight.

7. For final tension adjustment, loosen the bracket in step 5, pull back toward the front of the line printer, and tighten the two screws holding the bracket. The tension is correct when the Mylar is evenly stretched across the ribbon plate, slightly curving around the edges of the ribbon plate, and the holes in the Mylar are fitted over the drum characters.

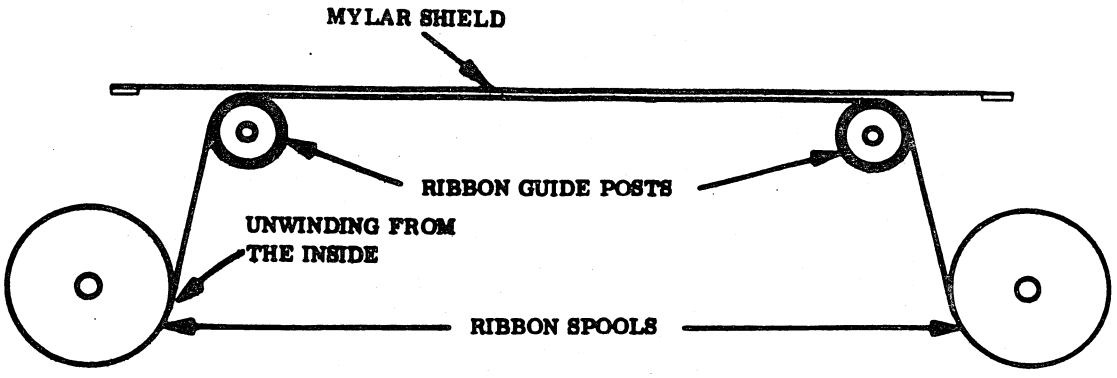

Figure 6F-30. Mylar Shield and Ribbon Installation Guide

F15 FORMAT READER BRUSH REPLACEMENT

To replace the format reader brush (part number 47905401), perform the following:

1. Turn off ac power to the line printer (procedure F2).
2. Remove the paper guide grill at the rear of the line printer.
3. Swing the top panel cover open.
4. Remove the two outer screws that hold the plastic reader cover (figure 6F-31).
5. Remove the cover.
6. Remove the taper-pin lead to the defective brush from the terminal socket, using the taper pin insertion/removal tool. (The brushes are numbered from the casting side out. The first brush is the power brush. The other brushes correspond to the page sentinel position.)
7. Loosen the terminal socket (figure 6F-31) and remove the defective brush.
8. Install the new brush (part number 47905401) through the slot of the brush clamp and position the brush to the same height as the adjacent brushes.

CAUTION

Brush clamps break off easily if excess force is applied. The terminal socket should only be snugged down.

9. Tighten the terminal sockets.
10. Reinsert the taper-pin lead.
11. Replace the plastic reader cover and tighten the screws.

F16 ARMATURE STRIKER REPLACEMENT

To replace the armature striker (part number 46401102), perform the following:

1. Turn off ac power to the line printer (procedure F2).
2. Open the front access door of the line printer.
3. Open the drum gate assembly.
4. Open the tractor flaps and remove the forms.
5. Remove the forms compression bar and disconnect the PAPER OUT switch by removing three screws on the left and three screws on the right (figure 6F-32). Set the compressor bar on the drum gate.
6. Remove the four bolts at the ends of paper plate assembly and slide the plate to the rear of the line printer (figure 6F-33).
7. Remove the two screws holding the top hammer bank shroud and remove the shroud from the line printer. Move the tractors to provide clearance. Determine the desired armature as follows:
   a. Read the column number on the back of the hammer bank. The odd armature mounting screws are in line with the number; the even armature mounting screws are to the left (when the operator is standing at the rear of the line printer).
   b. Hold the line of failing printout to the hammer bank; match column 1 to hammer 1 under the first open column. The associated armature can then be marked and removed.
8. Remove the two screws that hold the defective armature striker in place and allow the armature striker to drop (figure 6F-34).
9. Using the pin removal tool, push the two armature leads out of the connector plug and remove the armature striker from the line printer. (Note the red/black wire positions.)

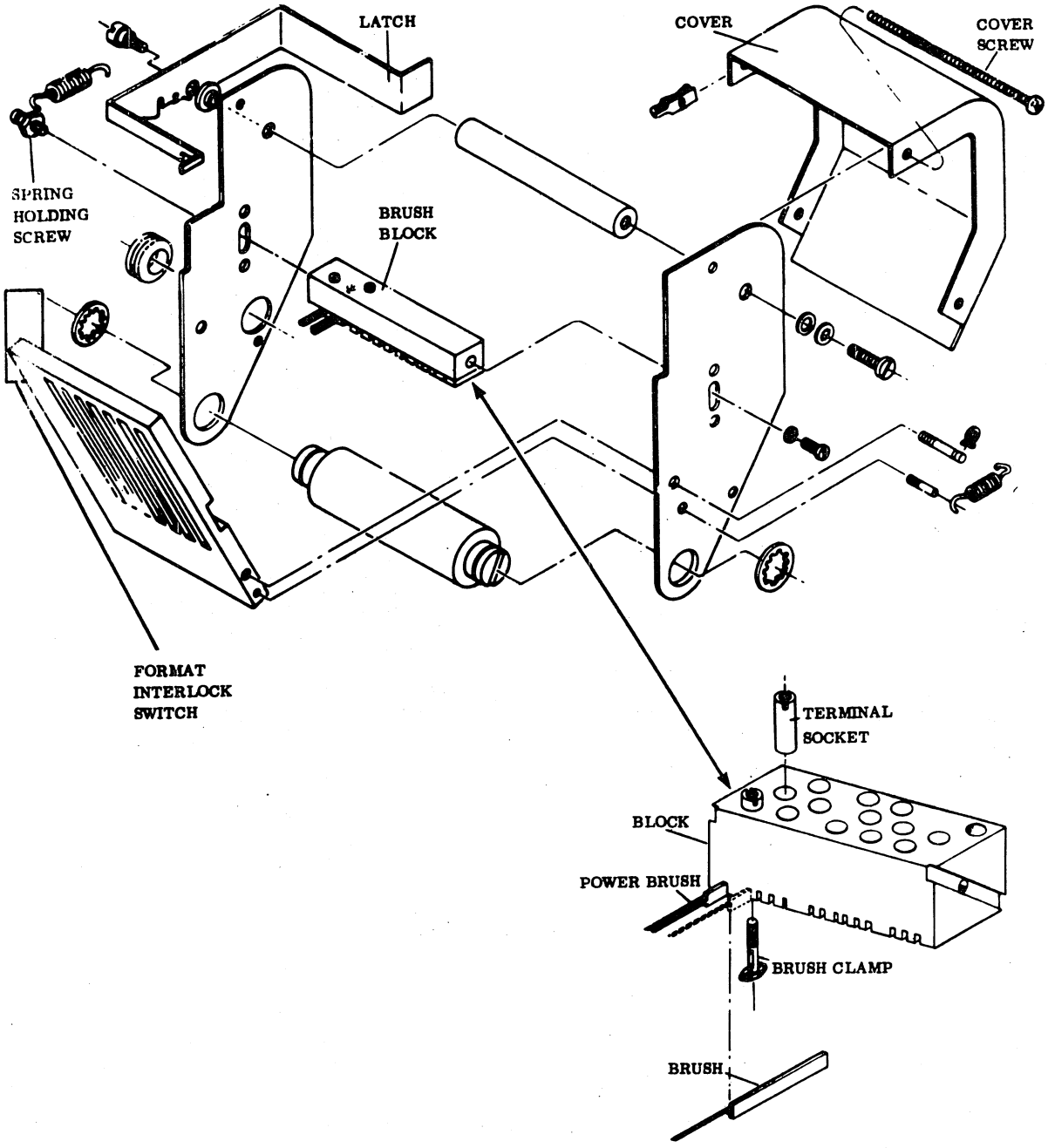

Figure 6F-31. Format Brush Reader Assembly

10. Lift the hammer for the defective armature striker and position the replacement armature striker in the guide comb slot. Install the two screws that hold the armature striker in place and snug them down.

11. Install the armature leads in the connector and reconnect the plug to the logic gate. Re-tie the cable.

12. Reinstall the forms compressor bar.

13. Perform the armature striker density adjustment (procedure F32).

14. Reinstall the upper hammer bank shroud. Reinstall the paper guide plate. Return the line printer to normal operation.

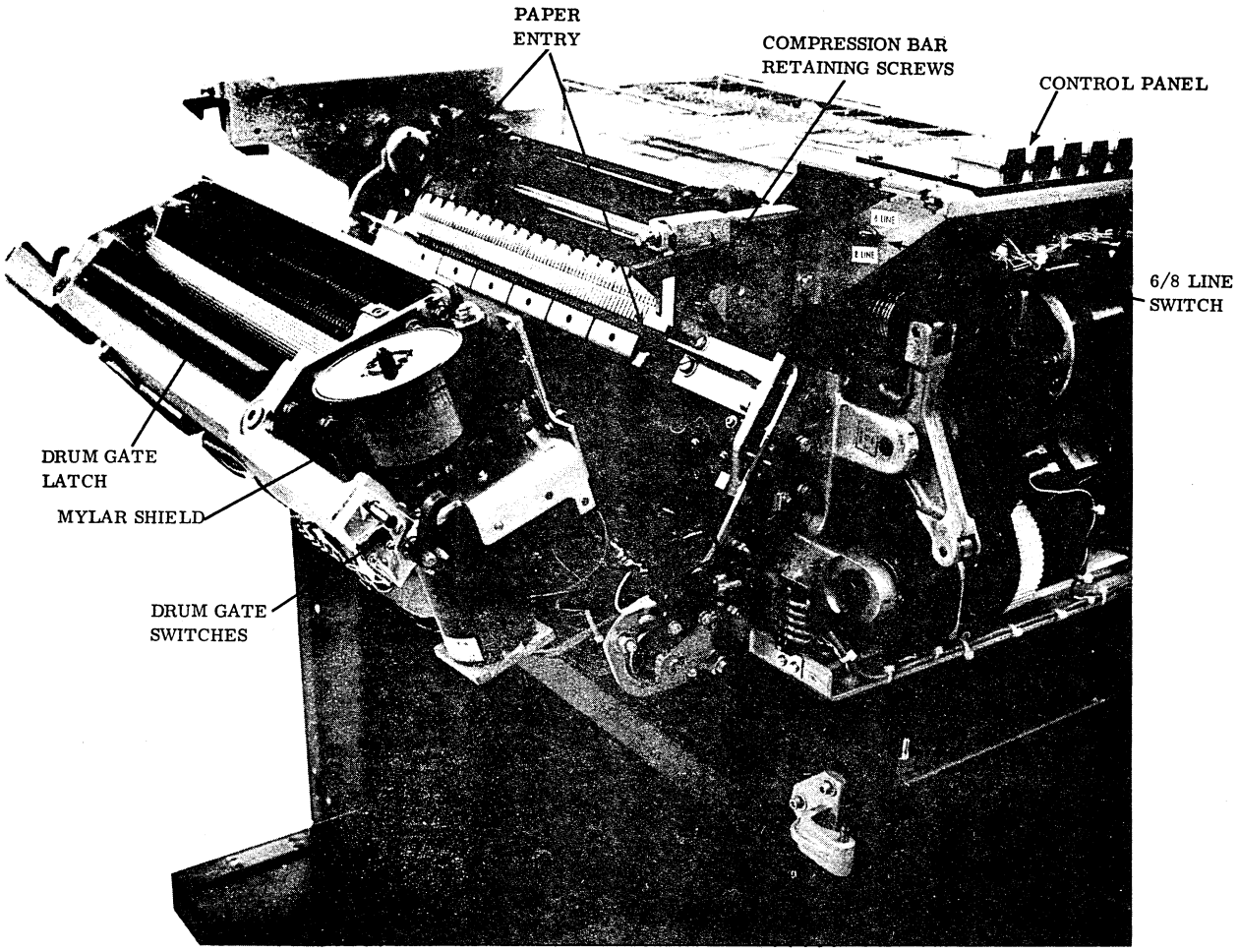

Figure 6F-32. Drum Gate Assembly Opening (Forms Compression Bar Removal)

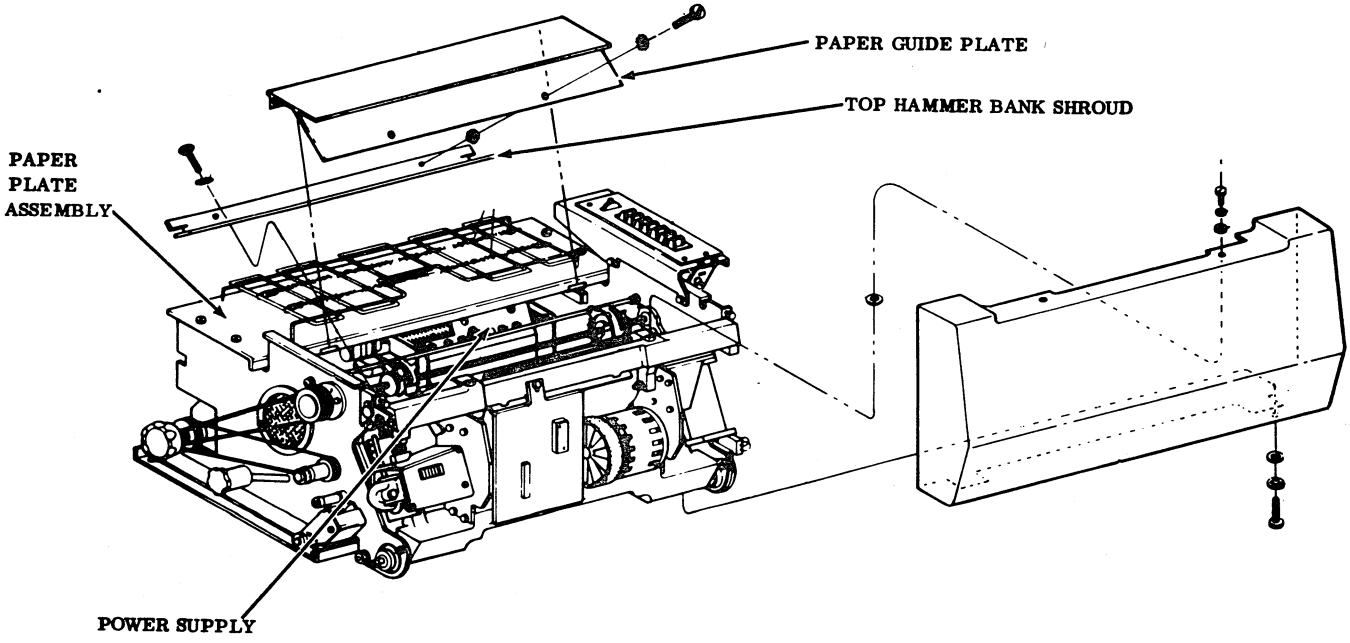

Figure 6F-33. Paper Plate Assembly Removal Guide

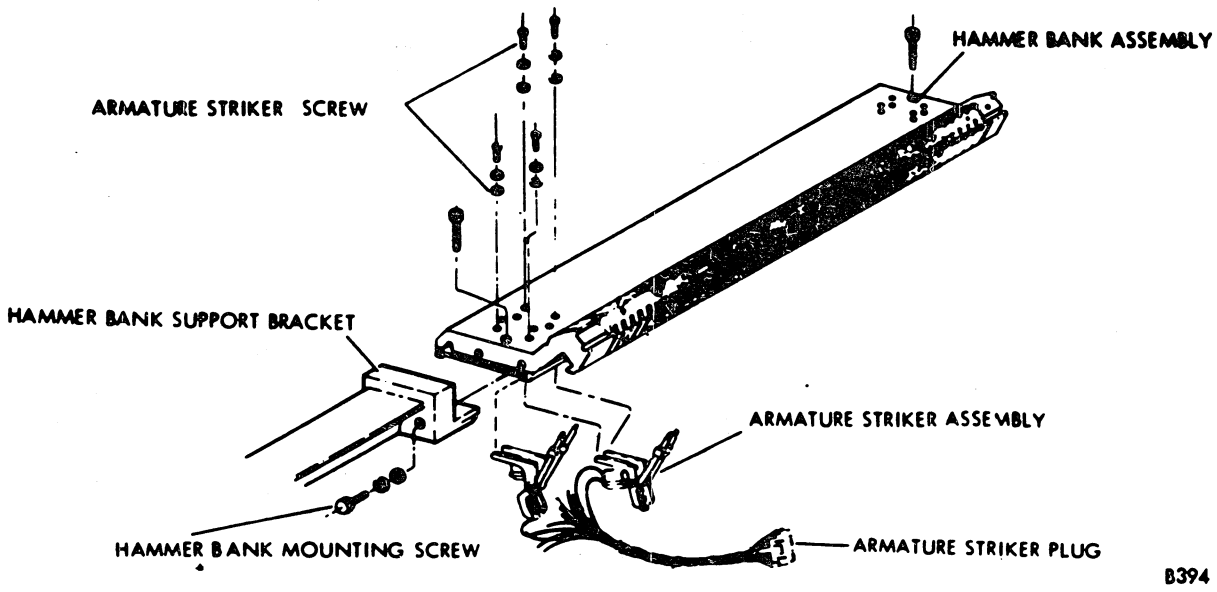

Figure 6F-34. Line Printer Hammer Bank Assembly

F17 PRINT HAMMER REPLACEMENT

To replace the print hammer (part number 49799202), perform the following:

1. Make certain the spare springs and plungers (part number 47869500) are on-site.
2. Turn off ac power to the line printer (procedure F2).
3. Open the front access door of the line printer.
4. Open the drum gate assembly.
5. After removing the screws from the hammer shaft retainer cap, maintain the pressure on the retainer cap, lift the rear of the retainer cap slightly, and slowly push toward the rear of the line printer until tension is removed from the spring and the plunger (figure 6F-35). A punch card may be held over the retainer cap to help hold the plungers. Lift the retainer cap up and out of the line printer, taking care not to rotate the cap so far forward that the plungers fall out.
6. The hammer pivot pin is now visible. Remove the pivot pin by first bringing all hammers associated with the selected module toward the front and pushing up until the hammer pivot pin is removed.
7. Slide the hammers off the pivot pin until the defective hammer can be removed.
8. Replace the defective hammer with a new hammer and reinstall all the hammers that were removed.
9. Reinstall the hammer pivot, making sure that all the hammers are centered in the guide slots. Make certain the pivot retainer guide slots are up.
10. Reinstall the hammer shaft retainer using reverse rotation, and tighten the mounting screws.

F18 TRIAC AND REED RELAY ASSEMBLY REPLACEMENT

To replace the triac and reed relay assembly (part number 47927100), perform the following:

1. Disconnect the ac power cord of the line printer from the site outlet.
2. Remove the paper guide grill at the rear of the line printer.
3. Swing the top cover panel of the line printer until it is fully open.
4. Remove the terminal cover plate of the Triac and reed relay board assembly (figure 6F-36).
5. Remove and label, as to terminating location, each wire connected to terminal block TB01 and TB02.
6. Remove the three screws that attach the Triac and reed relay board to the line printer chassis.
7. Install the new Triac and reed relay assembly (part number 47927100) in the reverse order starting with step 6.

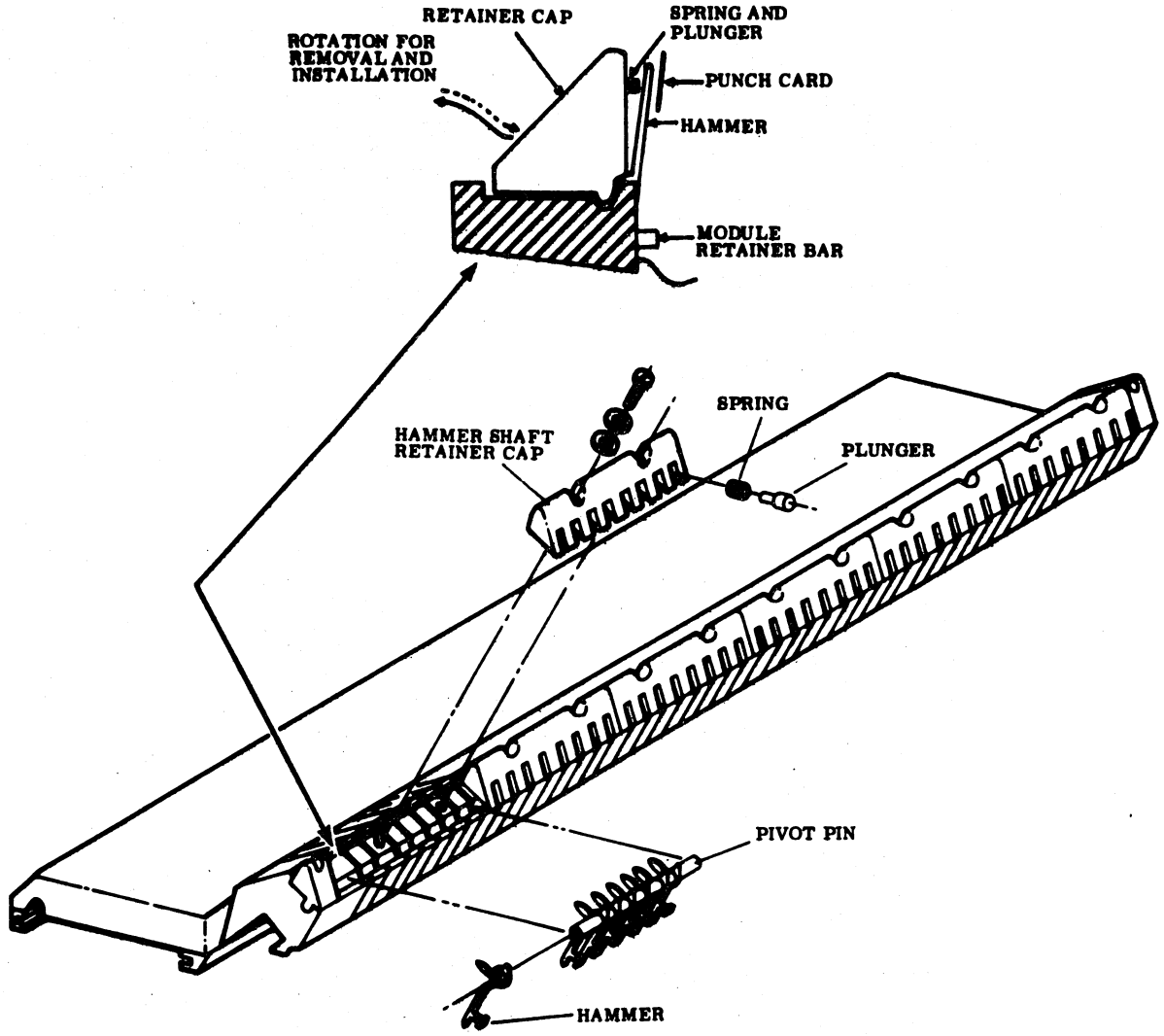

Figure 6F-35. Line Printer Hammer Replacement Guide

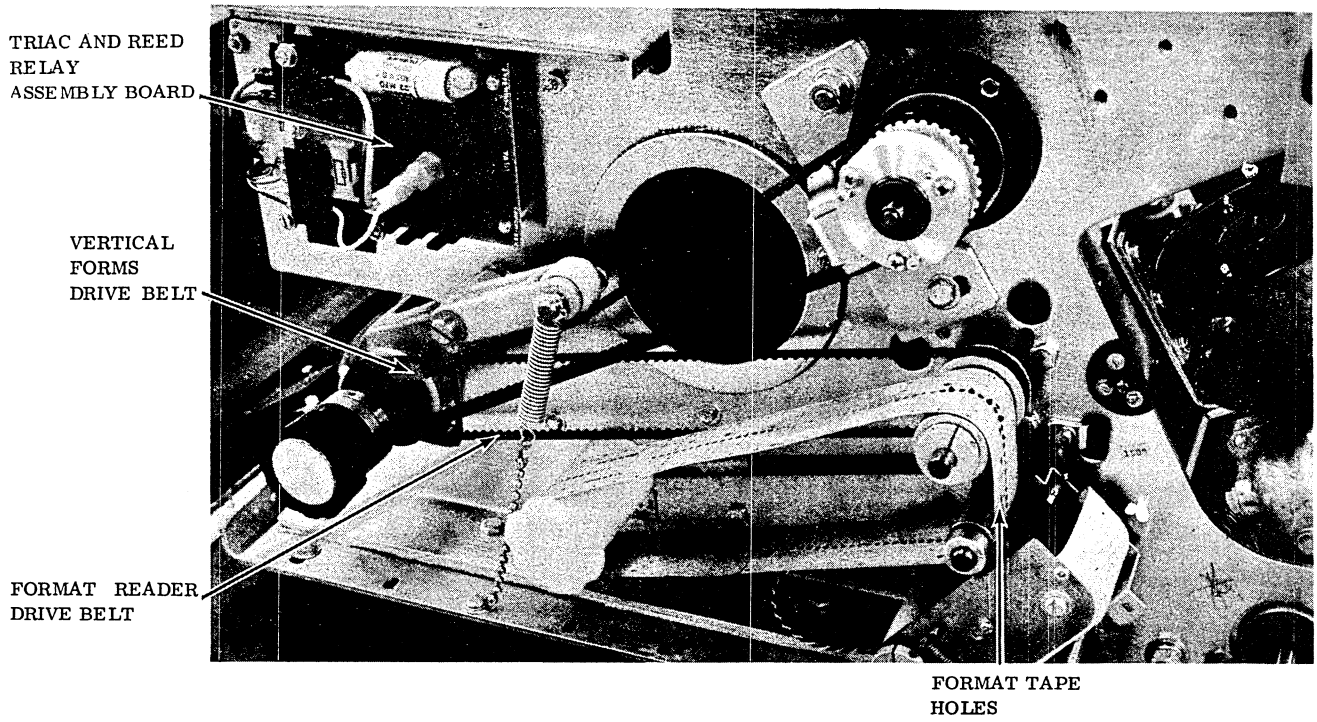

Figure 6F-36. Triac and Reed Relay Replacement Guide

F19 RIBBON GEAR MOTOR REPLACEMENT (LEFT SIDE)

To replace the ribbon gear motor (part number 50675000), perform the following:

1. Turn off ac power to the line printer (procedure F2).
2. Open the front access door of the line printer.
3. Loosen the four screws holding the drum gate cover and remove the front panel.
4. Open the drum gate assembly.
5. Remove the ribbon.
6. Remove the column locator scale plate (figure 6F-37).
7. Remove the lint tray from below the print drum.
8. Remove the four screws holding the inner drum shroud. Then remove the shroud from under the print drum by rotating it out and up between the drum gate and hammer area.
9. Remove the two motor wires from terminal board TB02 located on suppression network circuit board 1PC01 mounted below the print drum on the left-hand drum support side plate.
10. Loosen circuit board 1PC01 from the side plate to allow the motor wires to pass between the circuit board and the frame.
11. Measure and record the distance between the upper surface of the motor mounting bracket and the lower surface of the ribbon spool (figure 6F-38).
12. Loosen the clamp holding the ribbon spool assembly and remove the spool from the motor shaft.
13. Remove the three screws holding the motor to the mounting bracket and remove the motor.
14. Install the replacement motor (part number 50675000) onto the mounting bracket.
15. Install the ribbon spool assembly onto the motor shaft and set the height up to the dimension recorded in step 10.
16. Insert the motor wires through the grommet in the side plate.
17. Tighten circuit board 1PC01 on the side plate.
18. Connect the motor wires to TB02 located on the 1PC01 circuit board (the red wire is connected to terminal 2; the black wire to terminal 1).
19. Connect ac power and install the ribbon.
20. Perform the ribbon tracking adjustment (procedure F21) to establish the correct motor location so that the left- and right-hand ribbon spool posts are parallel.
21. Install the inner drum shroud, lint tray, and drum gate front panel.

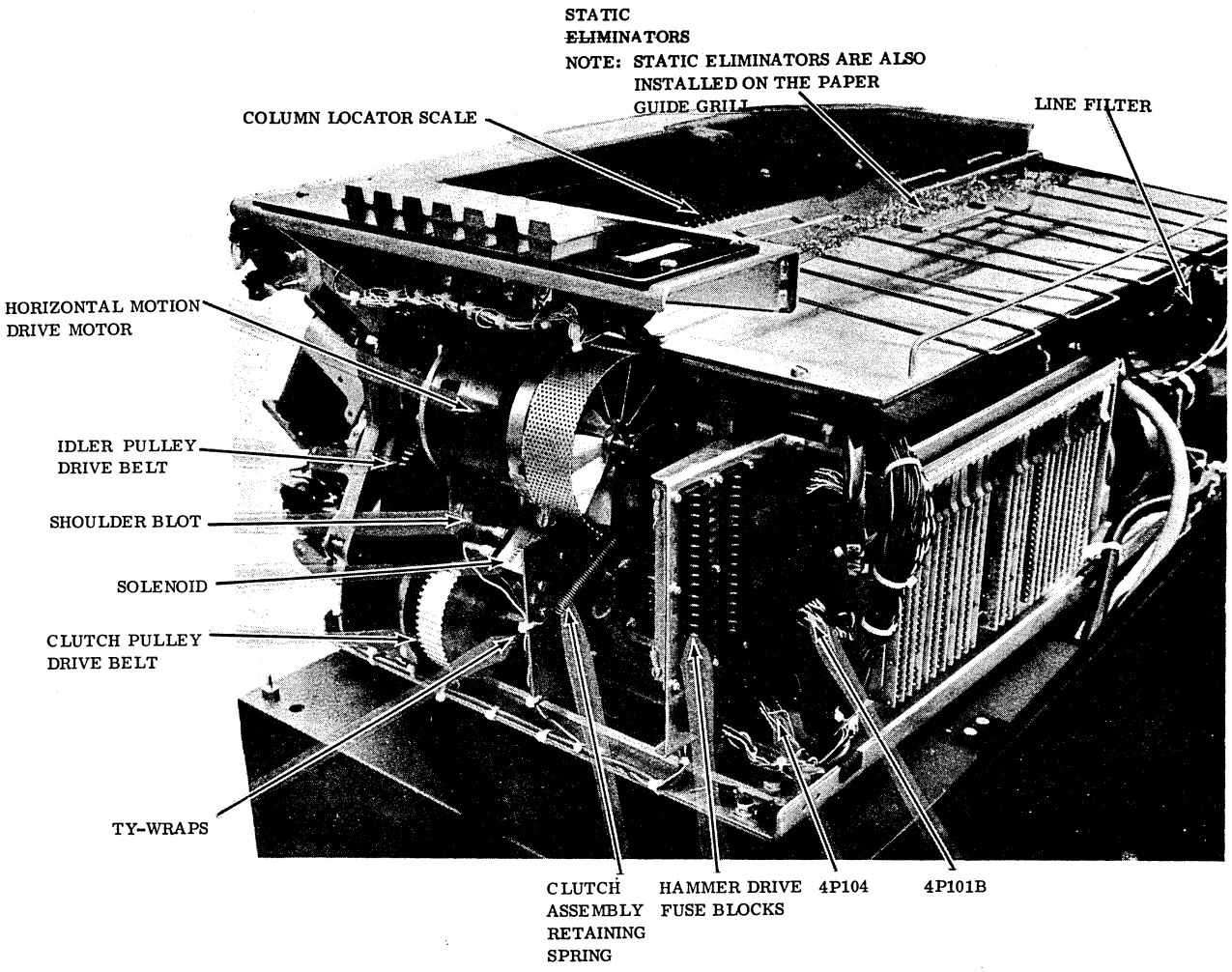

Figure 6F-37. Line Printer Chassis Side View (Column Locator Scale)

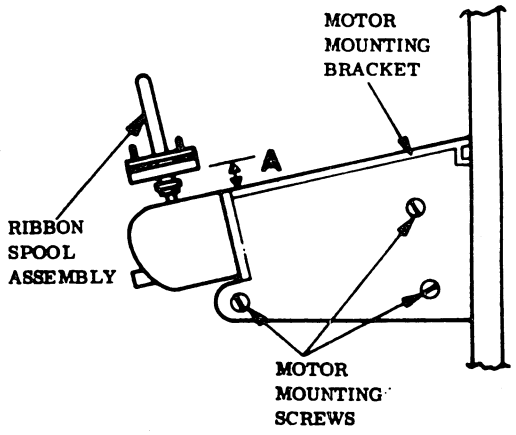

LEFT

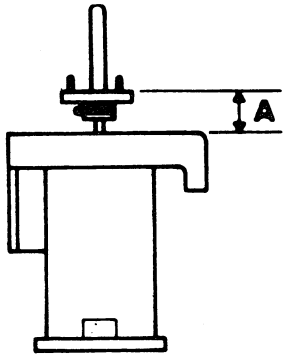

RIGHT

Figure 6F-38. Ribbon Gear and Torque Motors

F20 RIBBON TORQUE MOTOR REPLACEMENT (RIGHT SIDE)

To replace the ribbon torque motor (part number 50674900), perform the following:

1. Turn off ac power to the line printer (procedure F2).
2. Open the front access door of the line printer.
3. Loosen the four screws holding the drum gate front panel and remove the front panel.
4. Open the drum gate assembly.
5. Remove the ribbon.
6. Remove the two motor wires from terminal board 1TB01 located on the drum gate casting below the ribbon torque motor (figure 6F-39).
7. Measure and record the distance between the upper surface of the motor mounting bracket and the upper surface of the ribbon spool (figure 6F-38).
8. Loosen the clamp holding the ribbon spool assembly to the motor shaft, and remove the spool.
9. Remove the screws that hold the motor to the bracket and remove the motor.
10. Install the replacement motor (part number 50674900) and tighten the four mounting screws.
11. Connect the motor wires to terminal board 1TB01 (the red wire is connected to terminal 3; the black wire to terminal 1).
12. Connect ac power and install the ribbon.

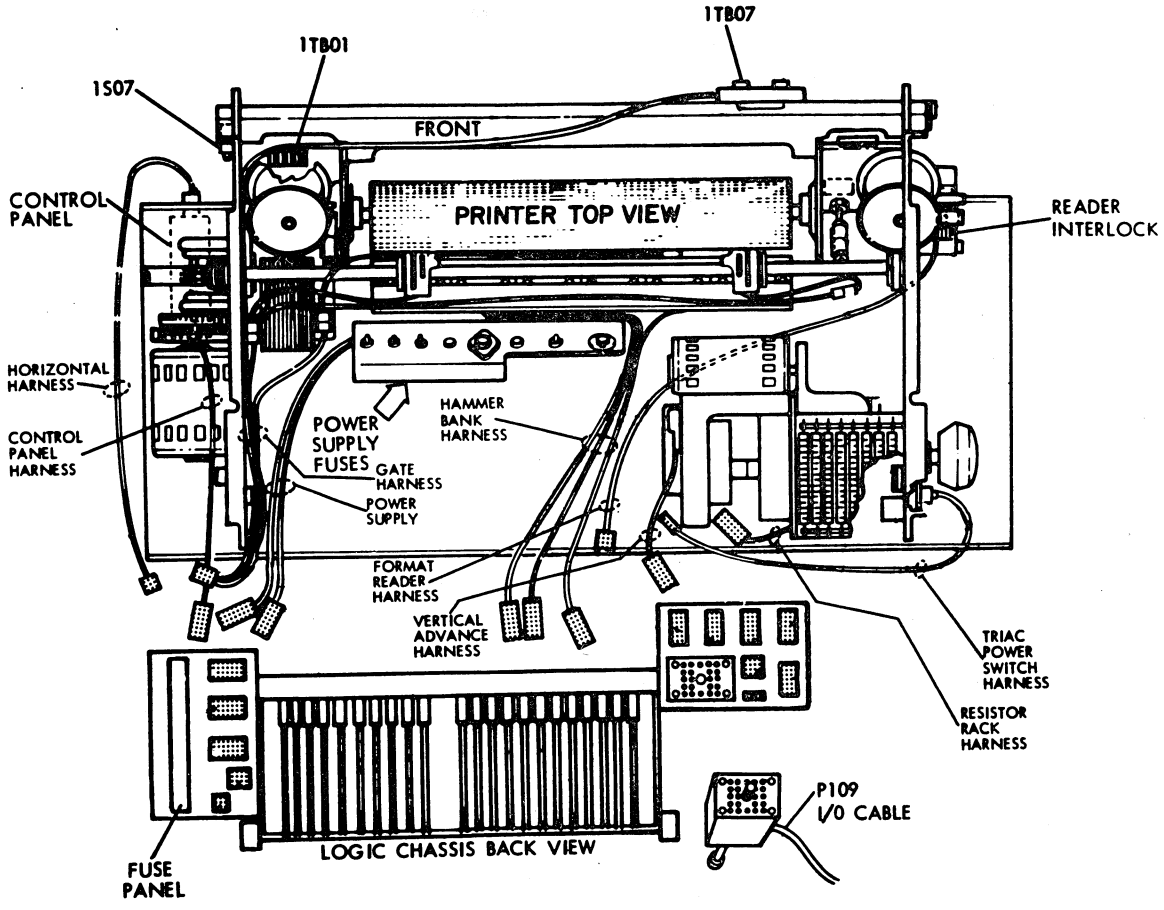

Figure 6F-39. Drum Gate Assembly (Terminal Board 1TB01)

13. Perform the ribbon tracking adjustment (procedure F21).

14. Install the drum gate front panel.

F21 RIBBON TRACKING TEST

To do the ribbon tracking test, perform the following:

1. Open the front access door of the line printer.

2. Open the line printer gate.

3. If the problem is drag or ribbon foldover, continue with step 4; otherwise, go to step 9.

4. A good ribbon is needed to determine where the problem is. If the problem cannot be located statically, the ribbon can be moved by unseating the hammer driver cards (4A02 through 4A10) and using the TEST MODE switch to print lines of blanks.

5. Align the ribbon spool by loosening the hose clamp located under the ribbon spool flange. Position the assembly so that the ribbon is centered on its respective ribbon post. Tighten the hose clamp. Any misalignment may be observed by ribbon foldover on the ribbon guide post (figure 6F-40).

6. Close the line printer gate.

7. Observe ribbon tracking while printing in test mode. The ribbon should be centered on both ribbon posts.

8. If necessary, repeat the procedure until the proper tracking is obtained.

9. Locate the left and right side ribbon guide posts (figure 6F-41). Then close the printer gate.

10. While operating the line printer in test mode, momentarily short the two surfaces on the left guide post and observe the direction of ribbon movement.

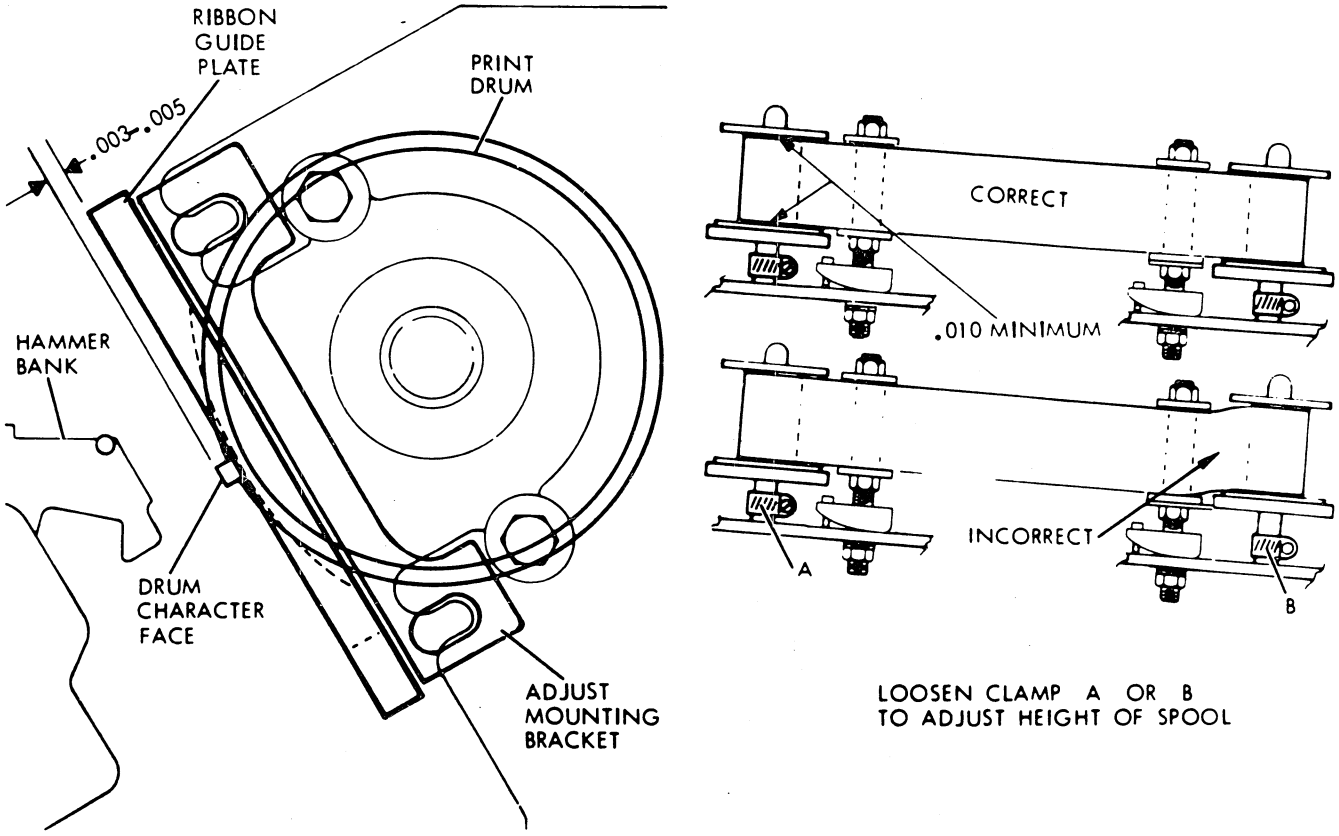

Figure 6F-40. Line Printer Ribbon Guide Plate Alignment Diagram

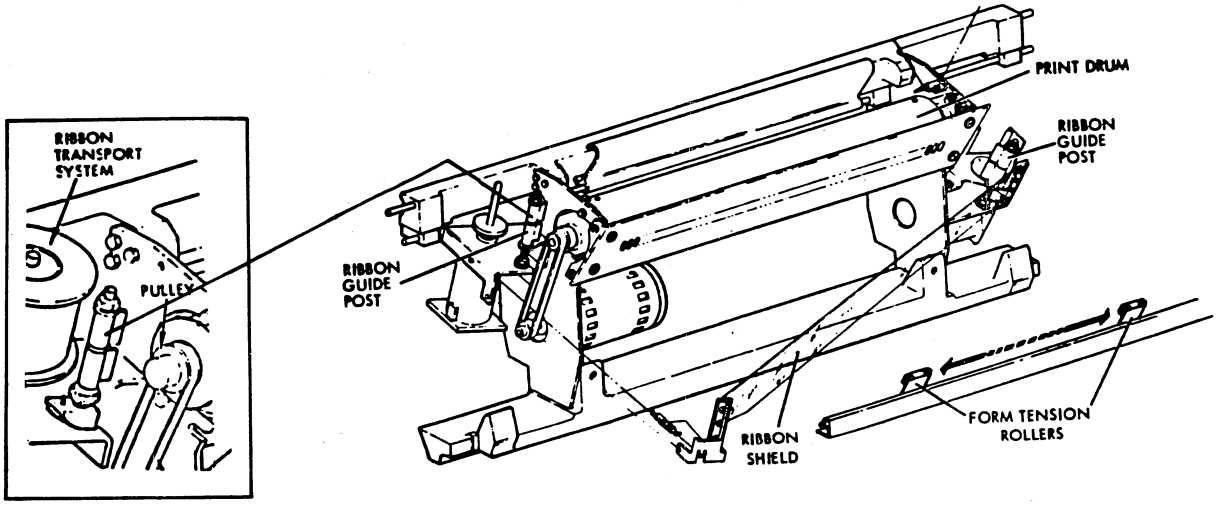

Figure 6F-41. Line Printer Ribbon Tracking Guide

11. Momentarily short the two surfaces on the right guide post and observe that the ribbon reverses.

12. Momentarily short the left guide post again as before and observe that the ribbon again reverses.

13. If any condition in steps 10, 11, and 12 fails to function, check for broken wires on the guide posts and motors, and go back to the DDLT being performed for further instructions.

14. Return the line printer to normal operation.

F22 CONTROL PANEL SWITCH REPLACEMENT

To replace the control panel switch (figure 6F-42), perform the following:

1. Disconnect the ac power cord of the line printer from the site outlet.

2. Remove the paper guide grill at the rear of the line printer.

3. Swing the top cover panel of the line printer until it is fully open.

4. Remove the four screws that secure the control panel plate to the line printer chassis.

5. Remove the cable clamp of the control panel cable assembly from the line printer chassis.

6. Label the up orientation of the 6 LINE/8 LINE toggle switch on the control panel mounting bracket and remove the switch.

7. Remove the control panel assembly by lifting upward and turn the assembly upside down so the switch contacts are facing upward.

8. Pull back on the sleeving on each contact of the switch that is to be replaced.

9. Label as to terminating location each wire of the switch that is to be replaced; then unsolder the wire/switch connections.

NOTE

All switches are of the same type (part number 44440107).

10. Remove the switch by pushing the switch mounting clamps inward.

11. Install the new switch by merely pushing the switch into the panel opening left by the old switch.

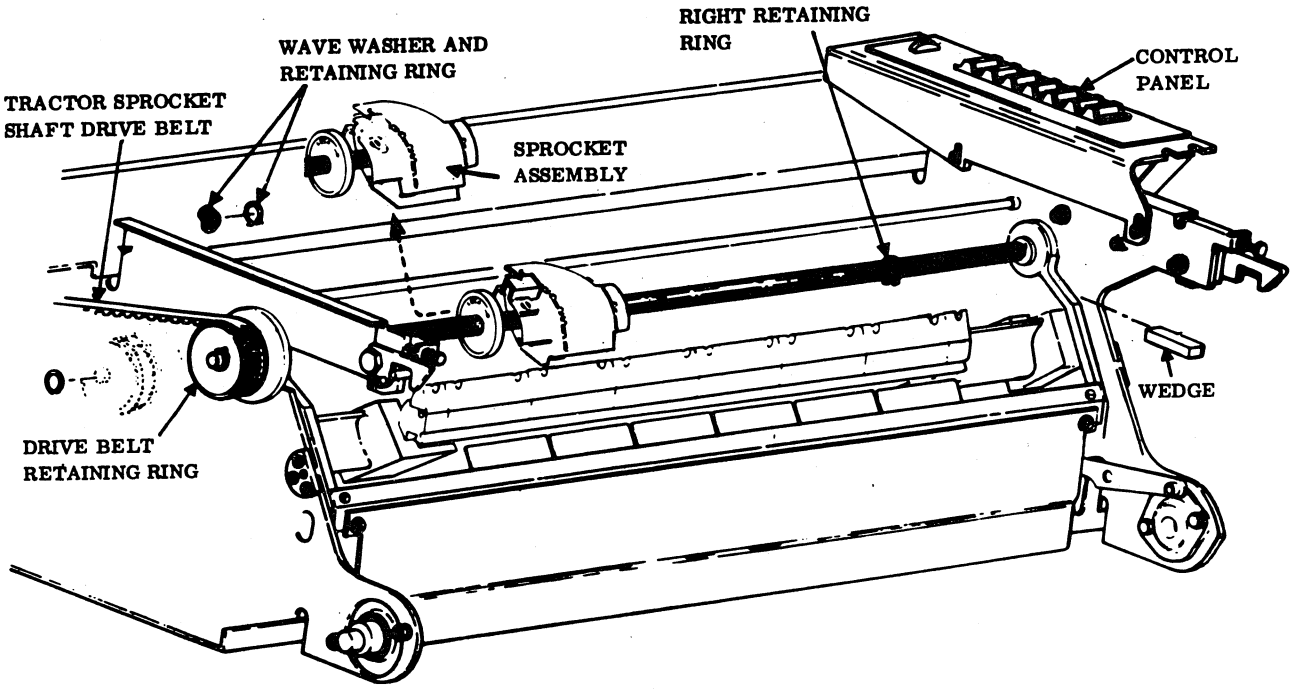

Figure 6F-42. Control Panel Switch Replacement Guide

12. Connect the wires to the replacement switch according to their labeled terminating location, and then solder each connection. Insert the light bulbs if required.

13. Complete the installation by performing the reverse of the above steps starting with step 8.

F23 LOGIC CHASSIS CIRCUIT BOARD REPLACEMENT

To replace the logic chassis printed circuit board (figure 6F-43), perform the following:

1. Turn off ac power to the line printer (procedure F2).

2. Remove the paper guide grill from the rear of the line printer.

3. Swing the top cover panel of the line printer until it is fully open.

4. Remove the desired circuit board by applying firm thumb pressure upward on the extractor lever of the circuit board. Carefully pull the circuit board outward until it is free of the logic chassis.

5. Insert the replacement circuit board by carefully aligning the upper and lower edge of the board with the guide rails of the logic chassis.

NOTE

If the replacement circuit board is either 4A11, 4A18, or 4A20, refer to procedure F33 after replacement.

If the replacement circuit board is a hammer drive (locations 4A02 through 4A10) see table 6F-4.

TABLE 6F-4. HAMMER DRIVER BOARDS

Hammer Driver Location	Print Column Positions	Fuse Number
4A02	1 through 16	1-4 †
4A03	17 through 32	5-8
4A04	33 through 48	9-12
4A05	49 through 64	13-16
4A06	65 through 80 ††	17, 21-23
4A07	81 through 96	24-27
4A08	97 through 112	28-31
4A09	127 through 128	32-35
4A10	129 through 136	36-37

† All hammer driver fuses (part number 95339408) have 3 amperes.

†† Fuse positions 18, 19, and 20 are not for hammer driver logic:

18 – Ribbon system fuse, 2 amperes (part number 95339407)
19 – Clutch fuse, 5 amperes (part number 95339409)
20 – Brake fuse, 5 amperes (part number 95339409)

28	27	26	25	24	23	22	21	20	19	18	17	16	15	14	13	12	11	10	09	08	07	06	05	04	03	02	01
	TEST MODE	RECEIVER AND TRANSMITTER	INPUT CONTROL 2	INPUT CONTROL 1	OUTPUT TIMING	TRANSLATOR AND OSCILLATOR	MOS MEMORY	PRINT CYCLE TIMING	FORMAT REGISTER AND DECODER	STATUS AND PAPER MOTION	ADDRESS REGISTER AND SUBSCAN COUNTER			BRUSH READER	RIBBON DRIVE	INPUT/OUTPUT	HAMMER TIMING AND SELECT	HAMMER DRIVER – COLUMNS 129 TO 136	HAMMER DRIVER – COLUMNS 113 TO 128	HAMMER DRIVER – COLUMNS 97 TO 112	HAMMER DRIVER – COLUMNS 81 TO 96	HAMMER DRIVER – COLUMNS 65 TO 80	HAMMER DRIVER – COLUMNS 49 TO 64	HAMMER DRIVER – COLUMNS 33 TO 48	HAMMER DRIVER – COLUMNS 17 TO 32	HAMMER DRIVER – COLUMNS 1 TO 16	VERTICAL FORMS ADVANCE

Figure 6F-43. Line Printer Board Placement Diagram

6. Ensure proper seating of the circuit board to the logic chassis backplane connector by applying firm thumb pressure at the front upper and lower corners of the board.

7. Attach the defective parts tag to the old circuit board.

F24 CARD READER/LINE PRINTER CONTROLLER REPLACEMENT

To replace the card reader/line printer controller (part number 88788600), perform the following:

1. Open the cabinet front access door.

2. Remove the cover plate at the front of the logic chassis by turning the four captive fasteners one quarter turn counterclockwise.

3. Remove the controller, using the card extractor tool attached to the cover plate (see figure 4A-1, volume 1).

4. Before inserting the new controller, verify that the equipment address, interrupt line, program protect, and parity select jumpers agree with the normal configuration setting described in section 4F, volume 1.

5. Position the new controller in front of the logic chassis so that the components of the controller are facing left.

6. Slide the controller carefully into the chassis. Seat the board into the backplane connector by applying firm thumb pressure at the upper and lower corners of the controller.

7. Attach the extractor tool to the card cage cover plate; then attach the cover plate to the logic chassis.

F25 TRACTOR ASSEMBLIES REPLACEMENT

To replace the tractor assemblies (part numbers 59650400 and 59650300), perform the following:

1. Turn off ac power to the line printer (procedure F2).

2. Remove the paper guide grill at the rear of the line printer.

3. Open the front access door and swing open the top cover panel.

4. Remove the paper tear switches (procedure F40).

5. Remove the tractor sprocket shaft drive belt by removing the drive belt retaining ring (figure 6F-44).

6. Slide the tractor shaft to the left using a screwdriver as a wedge (figure 6F-44). This removes the pressure from the rocker arm.

7. Loosen the set screw holding the rocker arm pivot pin (figure 6F-44).

8. Remove the pivot pin and rocker arm. Mark the top and the bottom of the rocker arm for reassembly. Be sure to mark the bearing cap, bearing, and pivot pin thrust washers.

9. Remove the retaining ring (figure 6F-44) on the outside of the sprocket pulley.

10. Loosen the two set screws in the pulley and remove the pulley (figure 6F-44).

11. Remove the screwdriver wedging the tractor shaft.

12. Move the sprocket assemblies to the left end of the shaft.

CAUTION

The shaft is under spring tension and tends to spring out of the machine if the retaining ring is removed.

13. Move the right retaining ring (figure 6F-44) toward the middle of the shaft until the shaft can be pulled out enough to clear the shuttle subassembly.

14. Remove the wave washer and retaining ring (figure 6F-44) from the left end of the shaft.

15. Slide the defective sprocket assembly (figure 6F-44) off the left end of the shaft.

16. Replace the defective sprocket assembly, taking care to ensure that the positioning holes on each pinwheel are aligned with each other.

17. Reinstall the retaining ring and wave washer on the left end of the shaft.

18. Slide the shaft back into position.

19. Replace the drive pulley and set the retaining ring in the end shaft groove.

20. Position the pulley against the retaining ring and tighten the set screws.

21. Reposition the retaining ring on the right end.

22. Wedge the shaft to the left and reinstall the rocker arm, ensuring that the squared end is at the top (see step 6).

23. Reinstall the bearing and bearing cap on the end of the shaft and remove the wedge.

24. Reinstall the drive belt.

25. Replace the paper tear switches (procedure F40).

26. Return the line printer to normal operation.

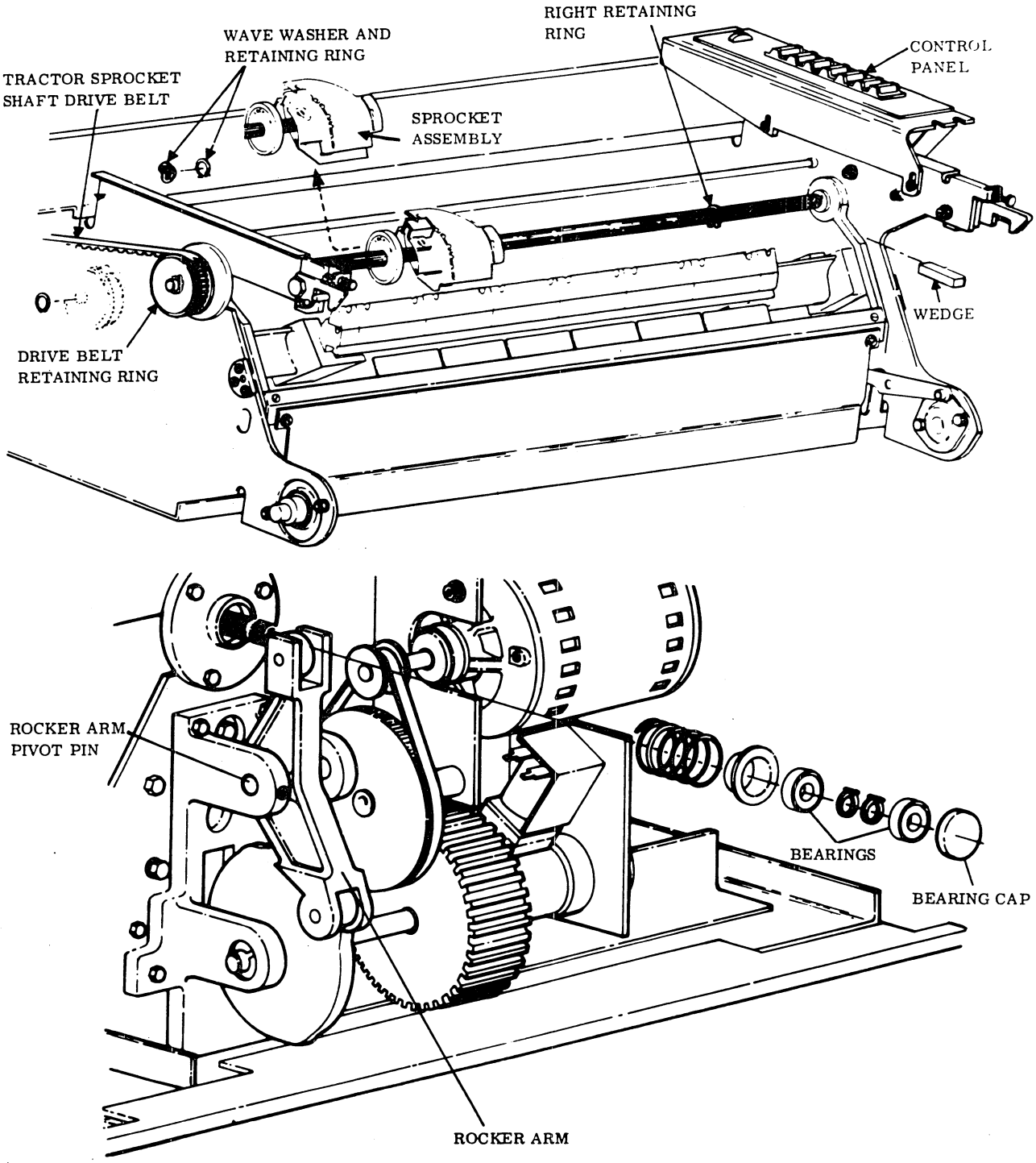

Figure 6F-44. Line Printer Tractor Assembly

F26 VERTICAL FORMS ADVANCEMENT ASSEMBLY DRIVE BELT REPLACEMENT

To replace the vertical forms advancement assembly drive belt (part number 92314085), perform the following:

1. Turn off ac power to the line printer (procedure F2).
2. Remove the paper guide grill at the rear of the line printer.
3. Open the front access door and swing open the top cover panel.
4. Make an alignment mark on the vertical forms drive sprocket and its drive belt to the format tape sprocket. Label the mark on the drive belt with a 1.
5. Make an alignment mark on the format tape sprocket and its drive belt. Label the mark on the drive belt with a 2.

NOTE

Alignment marks must be made on both sprockets and both ends of the belt.

6. Remove the tractor sprocket shaft drive belt (figure 6F-45) by removing the drive belt retaining ring.
7. Remove the format tape sprocket belt.
8. Remove the three mounting bolts holding the forms advance assembly to the line printer frame and slide it toward the card rack.
9. Loop the replacement belt (part number 92314085) over the vertical forms drive sprocket and between the forms advance assembly and the chassis.
10. Loop one end of the drive belt over the motor drive shaft first, and then loop the opposite end over the flywheel.
11. Reinstall and fasten the forms advance assembly mounting bolts to the line printer frame.
12. Replace the format tape sprocket belt, making sure to align the marks at each end of the belt with the alignment marks on each sprocket.
13. Replace the tractor sprocket shaft drive belt and the retaining ring.

F27 IDLER PULLEY DRIVE BELT REPLACEMENT

To replace the idler pulley drive belt (part number 94791700), perform the following:

1. Turn off ac power (procedure F2).
2. Remove the paper guide grill at the rear of the line printer.

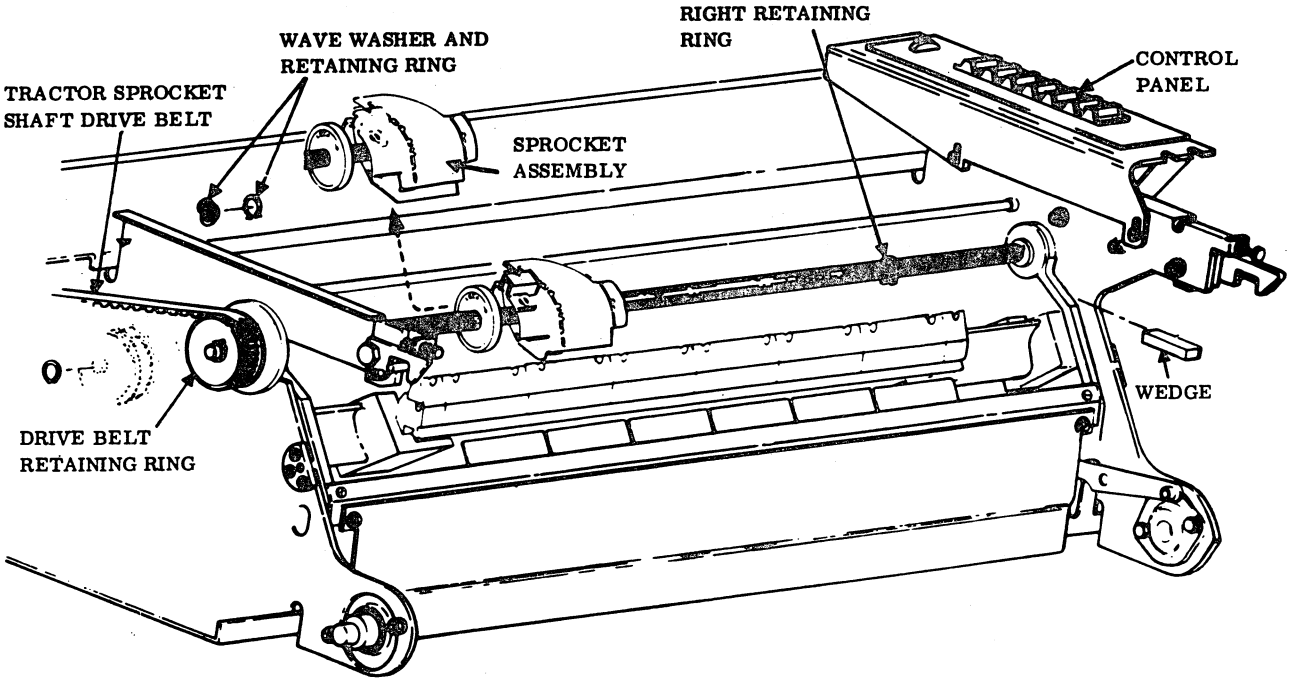

Figure 6F-45. Line Printer Tractor Assembly (Vertical Forms Drive Belt)

3. Open the front access door and swing open the top cover panel.

4. Install the drive belt by merely looping one end over the horizontal motion motor drive sprocket and the other end over the idler pulley (figure 6F-46).

F28 CLUTCH PULLEY DRIVE BELT REPLACEMENT

To replace the clutch pulley drive belt (part number 92755067), perform the following:

1. Turn off ac power (procedure F2).

2. Remove the paper guide grill at the rear of the line printer.

3. Open the front access door and swing open the top cover panel.

4. Label and remove the two wires connected to the solenoid (figure 6F-46).

5. Disconnect one end of the clutch assembly retaining spring.

6. Free the solenoid wires dressed along the clutch assembly by removing the Ty-wrap fasteners.

7. Remove the idler pulley drive belt and idler pulley shoulder bolt assembly from the motor mounting bracket.

8. Loop the clutch pulley drive belt replacement over the clutch assembly and onto the drive sprocket of the idler pulley.

9. Reconnect the idler pulley shoulder bolt to the motor mounting bracket.

10. Attach the idler pulley drive belt to the motor drive sprocket.

11. Attach the clutch pulley drive belt to the clutch pulley.

12. Reconnect the clutch assembly retaining spring.

13. Reconnect and Ty-wrap the solenoid wires according to their labeled location.

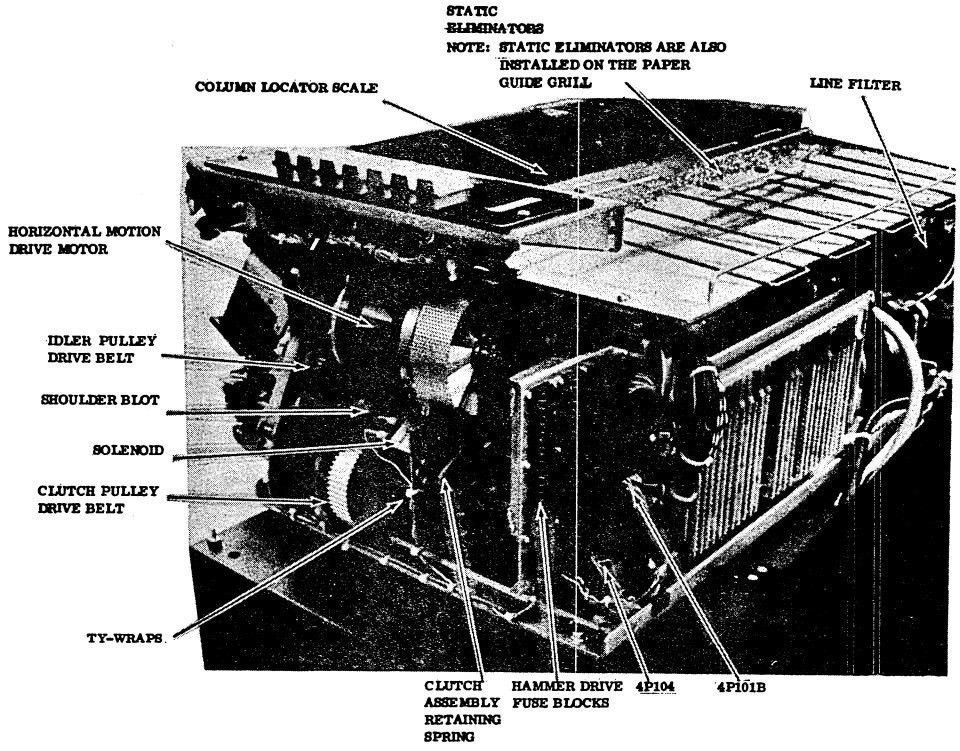

Figure 6F-46. Line Printer Chassis Side View (Idler Pulley Drive Belt)

F29 HORIZONTAL MOTION DRIVE MOTOR REPLACEMENT

To replace the horizontal motion drive motor (part number 50616104), perform the following:

1. Turn off ac power (procedure F2).
2. Remove the paper guide grill at the rear of the line printer.
3. Open the front access door and swing open the top cover panel.
4. Disconnect and label as to terminating location each wire of the horizontal drive motor to terminal block 1TB10 (figure 6F-46).
5. Using an Allen wrench, remove the idler pulley drive sprocket from the motor shaft.
6. Remove the three mounting screws attaching the horizontal motion drive motor to the line printer mounting bracket.
7. Remove the motor.
8. Remove the fan shield at the rear of the motor by releasing the retaining clamp. Use an Allen wrench to remove the fan blade. Install on the replacement motor.
9. Install the replacement motor (part number 50616104) in reverse order starting with step 6.

F30 PRINT DRUM DRIVE BELT REPLACEMENT

To replace the print drum drive belt (part number 92314065), perform the following:

1. Turn off ac power (procedure F2).
2. Remove the four screws holding the print drum assembly cover panel and remove the panel.
3. Loosen the three print drum drive motor mounting screws.
4. Install the replacement belt (part number 92314065) by looping one end onto the print drum hub and the other end onto the motor drive sprocket.
5. Push down on the motor, taking up the drive belt slack, and tighten the motor mounting screws.
6. Replace the drum assembly cover panel.

F31 PRINT DRUM DRIVE MOTOR REPLACEMENT

To replace the print drum drive motor (part number 50832702), perform the following:

1. Turn off ac power (procedure F2).
2. Remove the paper guide grill at the rear of the line printer.
3. Open the front access door and swing open the top cover panel.
4. Remove the four screws holding the print drum assembly cover panel and remove the panel.
5. Disconnect and label as to terminating location each of the print drum drive motor wires at terminal 1TB07 (figure 6F-47).
6. Remove the four screws mounting the motor to the line printer frame.
7. Remove the motor.
8. Remove the fan shield at the rear of the motor by releasing the retaining clamp. Use an Allen wrench to remove the fan blade. Install on the replacement motor.
9. Install the replacement motor (part number 50832702) in the reverse order starting with step 7.

F32 PRINT DENSITY AND FLIGHT TIME ADJUSTMENT

To adjust print density and flight time, perform the following:

1. Remove the paper guide grill at the rear of the line printer.
2. Open the front access door and swing open the top panel cover.
3. Remove the paper guide plate and top hammer bank shroud (figure 6F-48).

NOTE

The adjustment should be completed with the power off. After adjustment, turn the power on and check in test mode. Repeat until the unit is aligned.

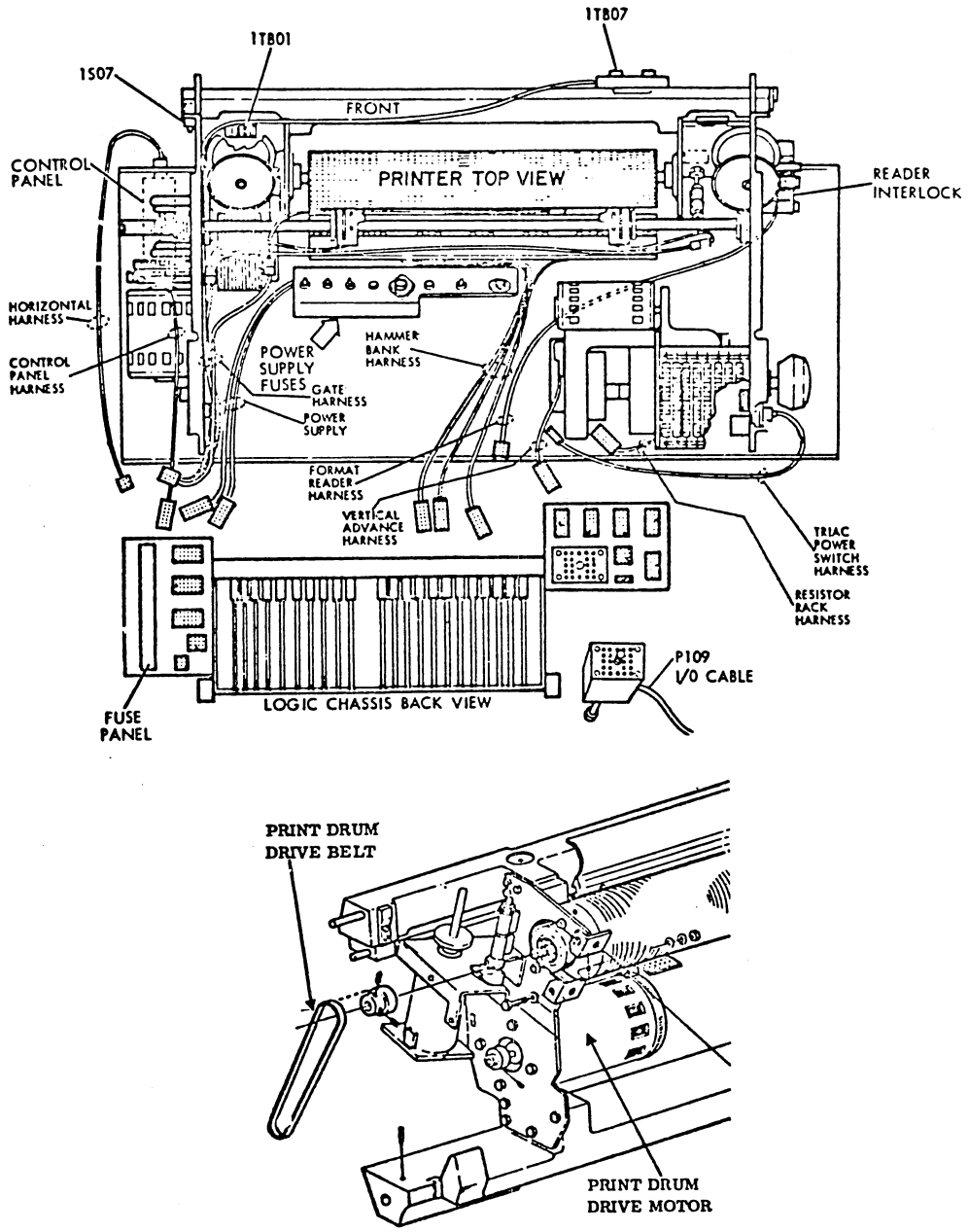

Figure 6F-47. Print Drum Motor Wiring

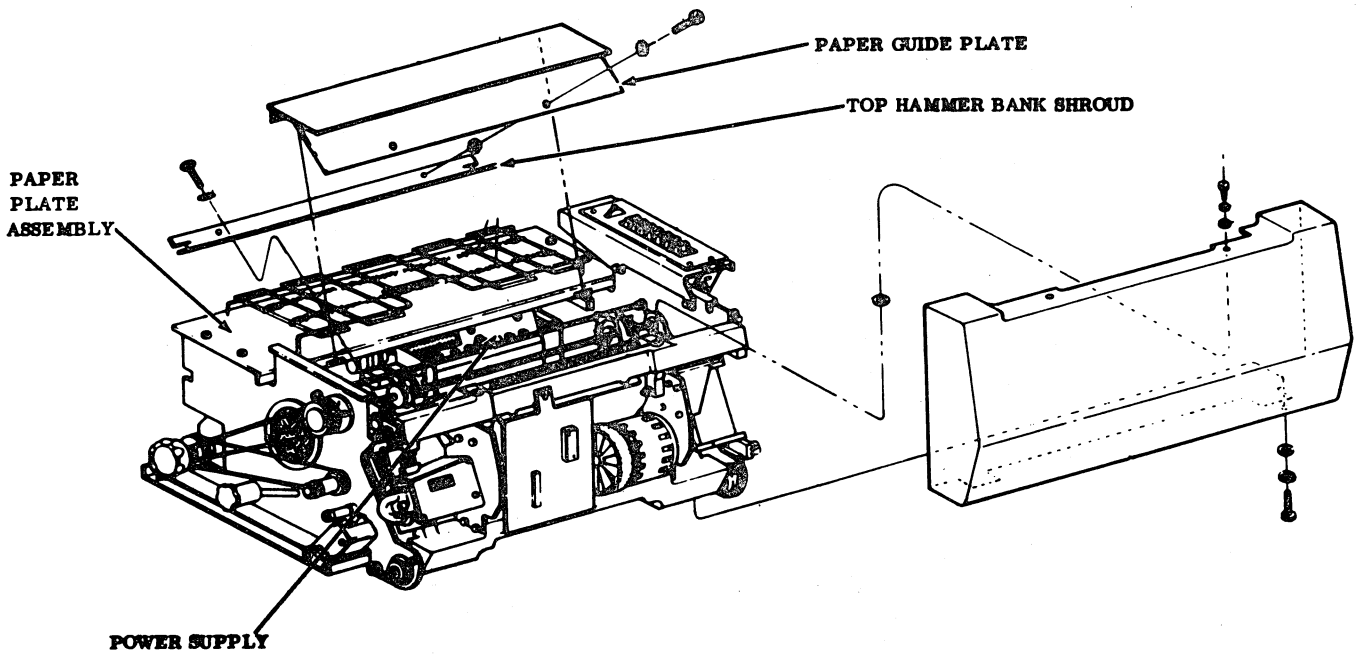

Figure 6F-48. Paper Guide Plate and Top Hammer Bank Shroud Removal Guide

4. For the print density adjustment, slightly loosen the two mounting screws at the striker position (figure 6F-49). The print density is increased by moving the striker forward. Decrease the density by moving the striker backward. To move a striker back, remove the lower front hammer bank shroud and tap the striker back using a punch.

5. For flight time adjustment, turn the flight time screw in if the character is low in relation to the print line. If the character is high in relation to the print line, turn the flight time screw out.

6. Replace the hammer bank shroud.

F33 CIRCUIT BOARD POTENTIOMETER ADJUSTMENT

To adjust the circuit board potentiometer, perform the following:

1. Turn on ac power (procedure F1).

2. Activate the TEST MODE switch on the logic circuit board in chassis slot position 27 by pressing down the switch once. The line printer should print a continuous lines of Es.

3. Stop the test mode operation by either pressing the TEST MODE switch again or by pressing the POWER ON switch on the control panel.

NOTE

Perform steps 4 through 6 only if continuous lines of Es are not printed.

4. Turn the potentiometer(s) on the new circuit board clockwise until the end of the potentiometer is felt.

5. Turn the potentiometer(s) counterclockwise for ten full revolutions.

6. Retry test mode operation.

F34 HAMMER DRIVE FUSES CHECK AND REPLACEMENT

To check and replace the hammer drive fuses, perform the following:

1. Turn ac power off (procedure F2).

2. Remove the paper guide grill at the rear of the line printer.

3. Swing the top cover panel of the line printer back until it is fully open.

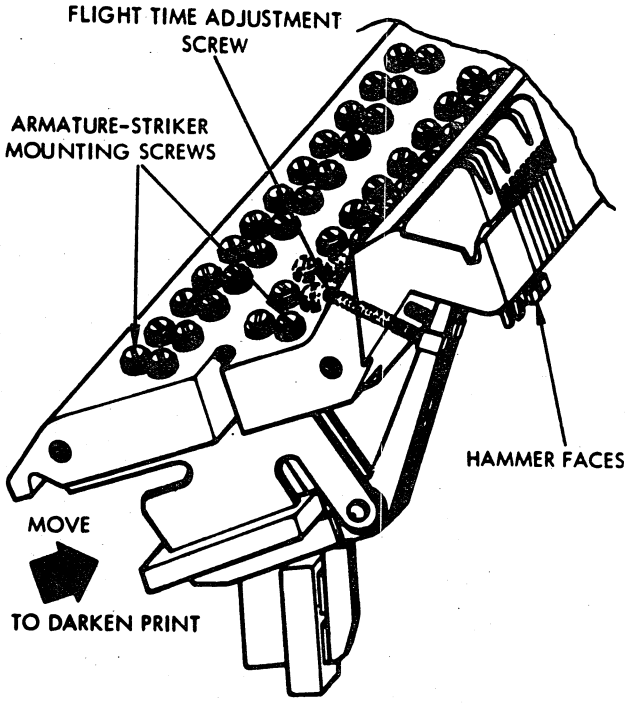

Figure 6F-49. Line Printer Print Quality Adjustment

4. Check the hammer drive fuse blocks (figure 6F-50) for blown fuses. A blown fuse is exhibited by its orange tab being displaced from its block.

5. Replace the blown fuse(s) by pulling the blown fuse block outward and inserting a replacement.

F35 THERMAL SWITCH REPLACEMENT

To replace thermal switch 4SW1 of the line printer (figure 6F-51), perform the following:

1. Remove power from the line printer:

   a. Press the POWER OFF switch.

   b. Disconnect the line printer ac power cord from the site power outlet.

2. Remove the paper guide plate (figure 6F-52).

3. Remove the four bolts that secure the paper plate assembly to the top of the line printer.

4. Remove the screw at the midpoint of the paper plate assembly that attaches the power supply to the paper plate assembly. Remove the cable assemblies from quick disconnect clamps under the paper plate assembly.

CAUTION

When performing step 5, do not damage the wiring to the filter attached to the bottom of a large one-quarter-inch plate.

5. Grasp the paper plate assembly above the thermal switch, lift it no more than one to two inches, and slide it slightly forward to rest on the raised portion of the side plate.

6. Remove the nuts and lock washers from the two standoffs of the bank of wire-wound resistors (figure 6F-51).

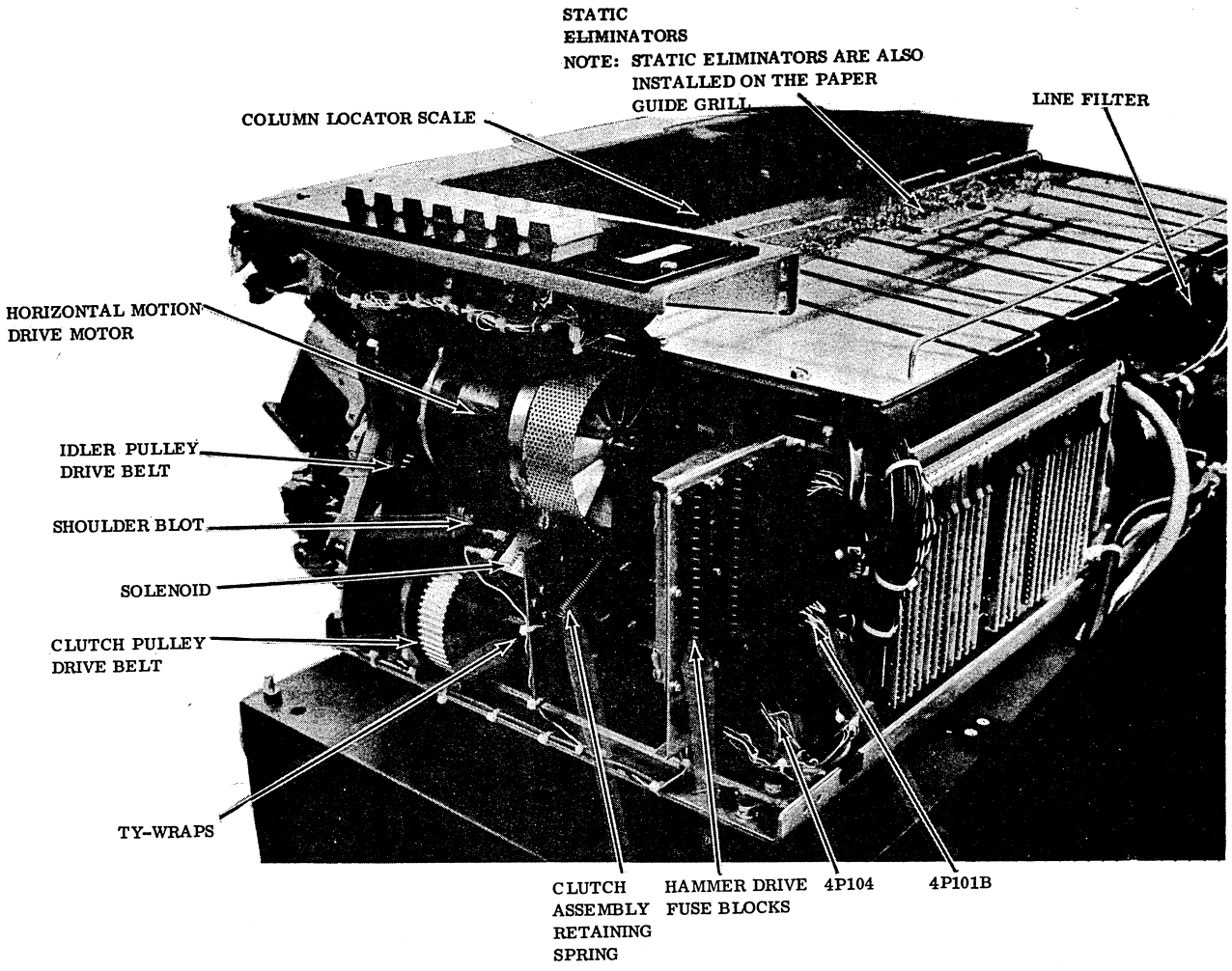

Figure 6F-50. Liné Printer Chassis Side View (Hammer Drive Fuses)

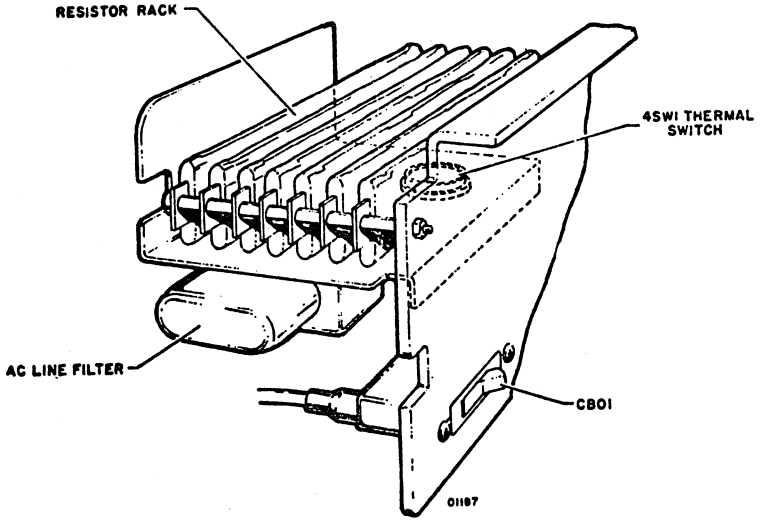

REAR VIEW (RIGHT CORNER)

Figure 6F-51. Thermal Switch

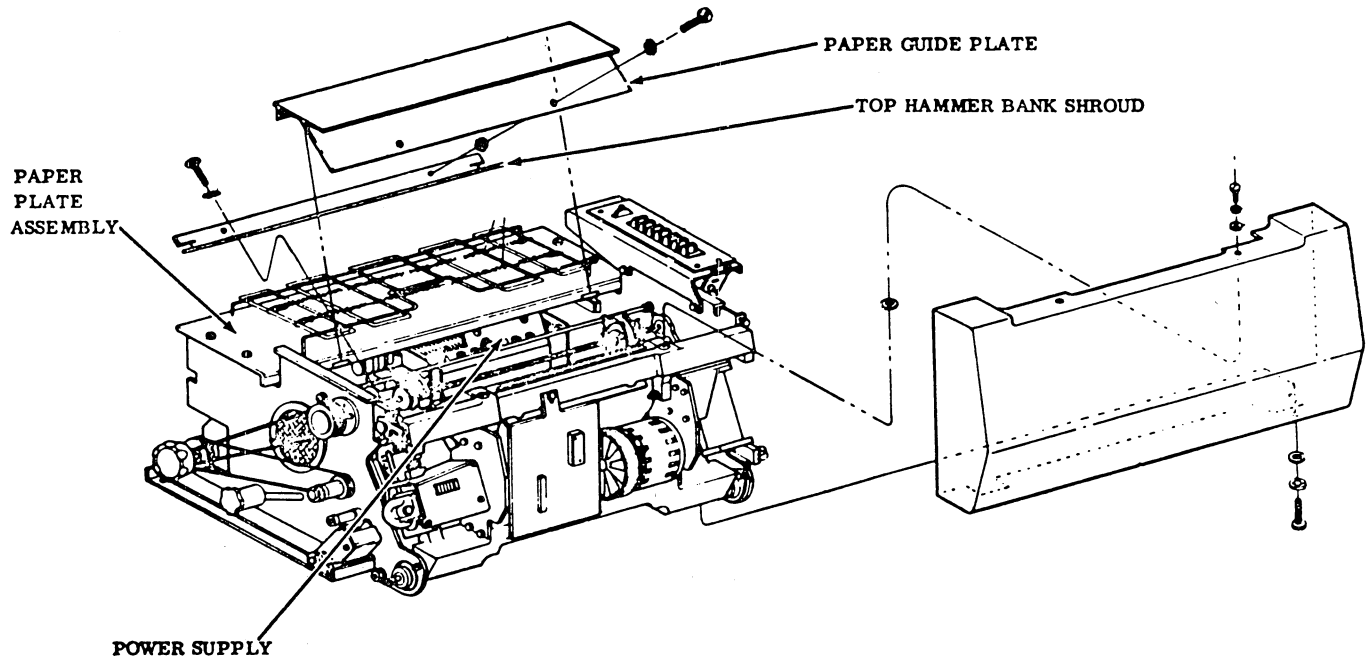

Figure 6F-52. Line Printer Mechanical Assembly

7. Unplug 4P108 connected to the wire-wound resistors. Remove the wire-wound resistors by pulling the entire assembly from the side of the line printer. Pull down on the angled plate beneath the wire-wound resistors and slide the resistors over the top of the side of the angled plate.

8. Remove the mounting hardware from thermal switch 4SW1. Slide the thermal switch out of the line printer and disconnect the wires from the switch.

9. Connect the wires to the new thermal switch.

10. Slide the new thermal switch (part number 59702200) into the line printer. Position the thermal switch so that the fusible wire is down and the domed portion of the switch inserts in the hole in the metal plate. Attach the thermal switch to the metal plate using the hardware removed earlier (the screws insert from the bottom of the metal plate).

11. Replace the thermal switch in the reverse order of the removal procedure.

F36 +5 V dc POWER SUPPLY ADJUSTMENT

To adjust the +5 V dc power supply, perform the following:

1. Open the right and left tractor flaps on the vertical motion tractor shaft and remove the forms.

2. Remove the two screws holding the paper guide plate (figure 6F-52), and remove the guide plate.

3. Adjust the 5 V dc adjustment potentiometer (figure 6F-53) for 5 V dc (procedure F10).

4. Reassemble in reverse order starting with step 2.

F37 FORMAT READER INSPECTION

To inspect the format reader, perform the following:

1. Turn off ac power to the line printer (procedure F2).

2. Remove the paper guide grill at the rear of the line printer.

3. Swing the top of panel cover open.

4. Release the format brush assembly by pressing the latch (figure 6F-54).

5. Inspect the brush block assembly for bent or damaged brushes. If damage is apparent, go to procedure F15.

6. Gently latch the brush reader closed. Listen for the interlock switch (figure 6F-54) to click slightly before the brush reader is latched. If a click is not heard, go to procedure F38.

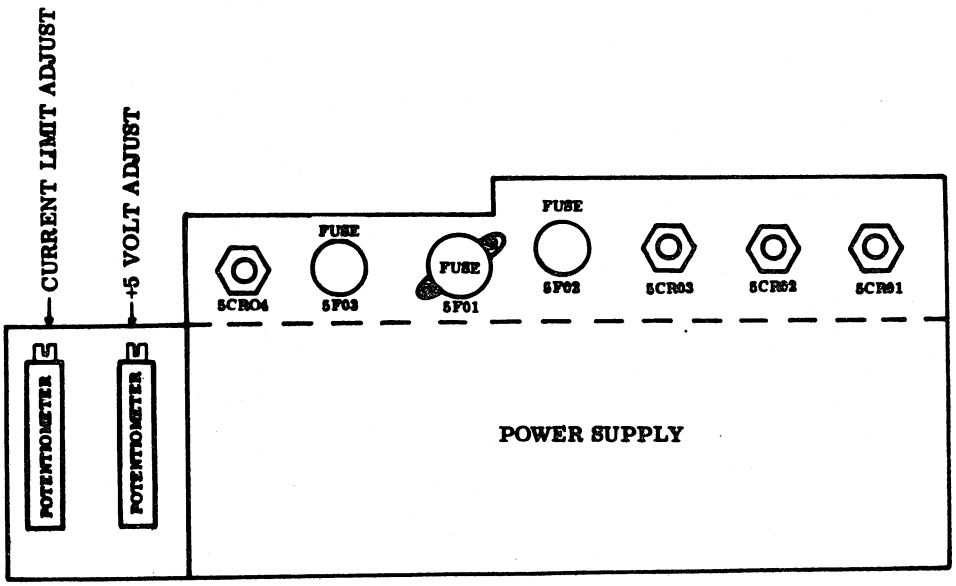

Figure 6F-53. Line Printer Power Supply Adjustment Guide

F38 FORMAT READER INTERLOCK SWITCH ADJUSTMENT/REPLACEMENT

To adjust and replace the format reader interlock switch, perform the following:

1. Turn off ac power (procedure F2).
2. Remove the paper guide grill at the rear of the line printer.
3. Swing the top of the panel cover open.
4. Loosen the interlock switch screws (figure 6F-54) at the rear of the format reader.
5. Move the switch in or out relative to the brush reader assembly until the switch actuates just before the assembly is latched.
6. Tighten the interlock switch screws.

F39 PAPER TEAR AND OUT-OF-PAPER SWITCH INSPECTION

To inspect the paper tear switch, perform the following:

1. With ac power on and the line printer in start condition, momentarily raise the left pinwheel flap of the sprocket assembly (figure 6F-55) to simulate a paper tear condition. The PAPER FAULT and STOP lamps should illuminate and the START lamp should extinguish. If this does not occur, go to procedure F40.
2. Raise the right pinwheel flap as in step 1 to simulate a paper tear. The PAPER FAULT and STOP lamps should illuminate and the START lamp should extinguish. If not, go to procedure F40.
3. The paper fault light should extinguish when the pinwheel flaps are closed.

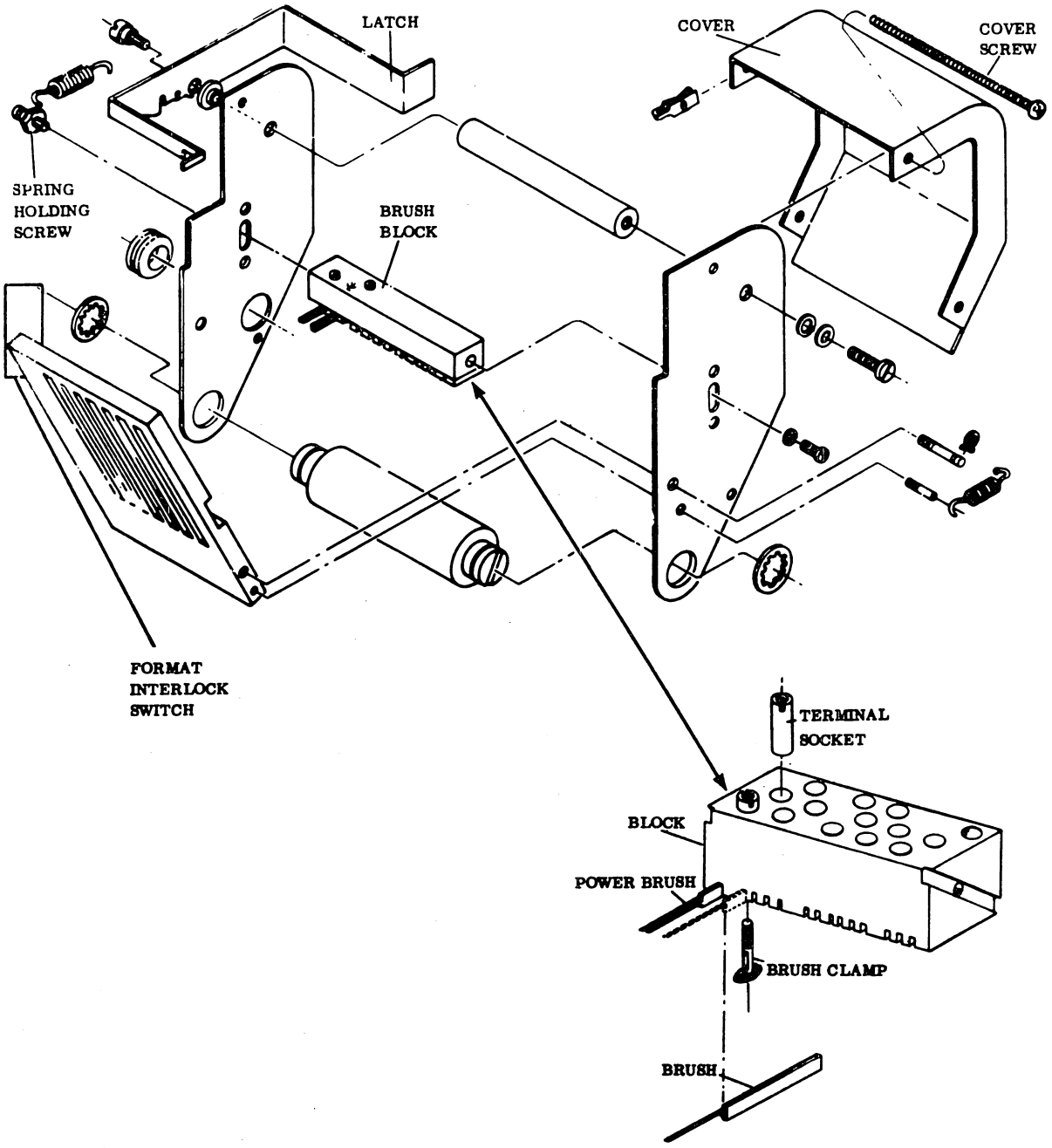

Figure 6F-54. Format Brush Reader Assembly

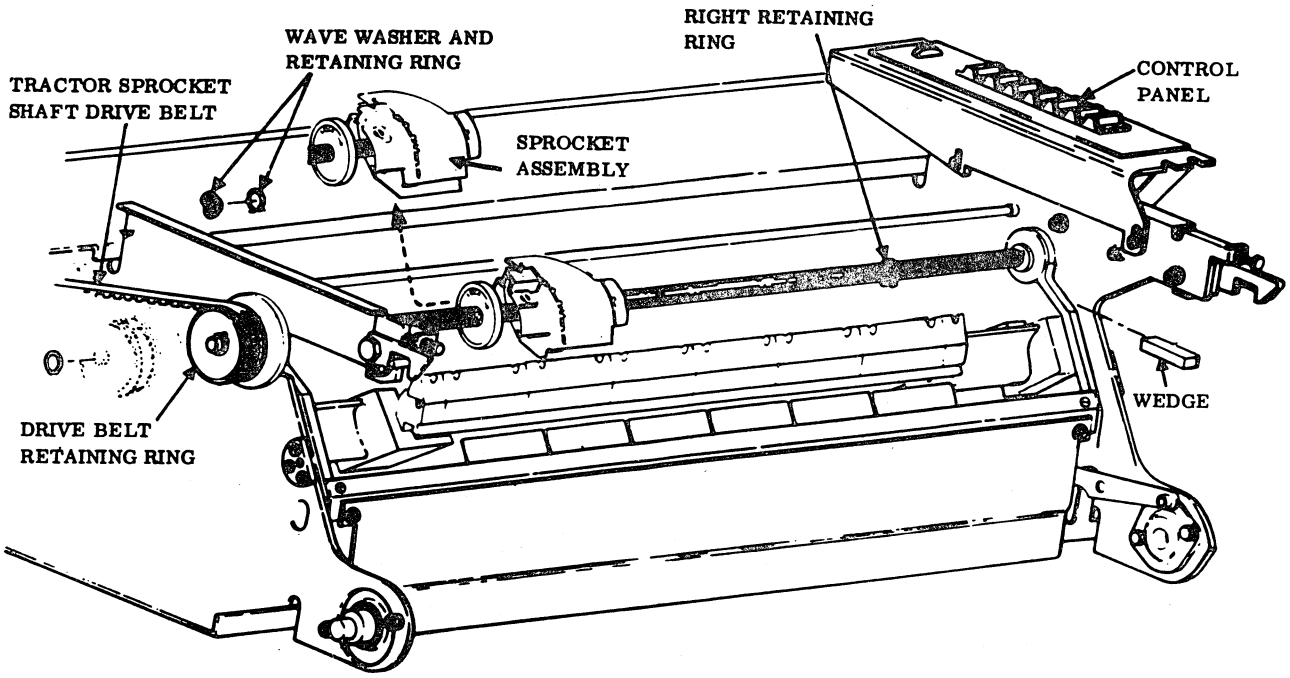

Figure 6F-55. Line Printer Tractor Assembly (Paper Tear Switches)

To inspect the out-of-paper switch, perform the following:

1. With the ac power on and the line printer in stop condition, tear off the forms well below the print station.
2. Start printing (use test mode). The paper should stop when the last line of the last form has been printed. If not, go to procedure F41.

F40 PAPER TEAR SWITCH ADJUSTMENT/REPLACEMENT

To adjust and replace the paper tear switches, perform the following:

1. Turn off ac power (procedure F2).
2. Remove the paper guide grill at the rear of the line printer.
3. Swing the top of the panel cover open.
4. Expose the paper tear switch by swinging back the sprocket assembly pin wheel flap (figure 6F-55).
5. Mark the current position of the switch to be replaced.
6. Remove the two screws holding the switch to the mounting bracket.
7. Carefully remove (unsolder) the two wires from the switch to be replaced noting their position on the switch.
8. Replace the wires on the new switch (solder).
9. Position the new switch in the relative position of the old switch using the two screws and the marking. Do not tighten the screws.
10. Make sure that the switch actuators are allowed to advance through the slot provided in the sprocket cover when the cover is placed in its normal position.
11. Adjust the new switch so that the line printer remains in a start condition while printing and goes to stop when the paper or flaps are lifted.
12. Tighten the switch mounting screws.

F41 OUT-OF-PAPER SWITCH ADJUSTMENT/REPLACEMENT

To adjust or replace the out-of-paper switch (figure 6F-56), perform the following:

1. Turn off ac power (procedure F2).
2. Remove the paper guide grill at the rear of the line printer.
3. Swing the top of the panel cover open.
4. Open the print head gate assembly exposing the rear forms assembly containing the compression bars. The out-of-paper switch spring arm should protrude through the left hand slot in the forms compression bar.
5. Remove the forms compression bar by removing the three screws at the extreme left and right side of the forms compression bar.
6. Carefully rotate the forms compression bar, exposing the out-of-paper switch on the rear side.
7. Remove (unsolder) the two wires from the switch assembly to be replaced, noting their position on the switch.
8. Observing the position of the switch to be replaced, remove the nut holding the switch in its mounting bracket. Remove the switch.
9. Replace the new switch using the nut to hold it to the mounting assembly. Make sure that the spring arm protrudes through the slot in the forms assembly. Check also that the switch arm does not rub on the side of the slot when depressed by the paper.
10. Tighten the switch in place when it is clear there are no interferences.
11. Replace the two wires on the switch (solder).
12. Carefully rotate the forms compression bar to its original position. Replace the screws but do not tighten. Check the switch action by listening for a click as the spring arm is depressed. If a click is heard before the switch arm is depressed totally behind the forms compression bar (figure 6F-57), tighten the retaining screws. Otherwise, readjust the switch.
13. Return the line printer to its normal closed panel state. Go to procedure F39 and check the out-of-paper switch.

F42 GATE SWITCH CHECK/ADJUSTMENT

To check and adjust the gate switches of the line printer, perform the following:

1. Open the front panel of the line printer.
2. Remove the drum gate cover from the line printer gate by first removing the two screws at the bottom of the cover and by then removing the two screws at the top of the cover (figure 6F-58).
3. Remove any washers from the line printer frame in the area of the top mounting screws for the shroud. Place these washers with mounting screws so that they are not overlooked when reinstalling the shroud.
4. Perform an operational check of the gate switches as follows:
   a. Open the gate and pull the gate just clear of the latches at each end. Let the gate swing back to rest against the outside surface of the latches (figure 6F-59).
   b. Insert a wedge between the latching rod and the lever of the gate switch at the left side of the gate so that the lever of the gate switch is fully depressed.
   c. Press and hold the lever of the gate switch on the right of the gate.
   d. Press the START indicator/switch. Check that the START indicator illuminates. If the START indicator does not illuminate, go to step 5 and perform fault isolation on the gate switches.
   e. Release the hand-held lever of the gate switch. Check that the START indicator extinguishes and that the STOP indicator illuminates.
   f. Repeat steps 4b through 4e, inserting a wedge in the gate switch at the right of the gate. If the START indicator illuminates and then extinguishes when the gate switch is released, go to step 6 and perform the adjustment of the gate switch.
5. Perform fault isolation of the gate switches as follows:
   a. Pull back the plastic insulation, exposing the two center wires from one gate switch.
   b. Connect the test leads of the ohmmeter to the gate switch.
   c. Press the lever of the gate switch and check that the ohmmeter shows an open circuit when the lever is pressed and shows continuity when the lever is released. If this does not occur, replace the switch and perform the adjustment (step 6).
   d. Repeat steps 5a through 5c for the other gate switch.
   e. Recover the wires to both the gate switches if both switches are good.
6. Perform adjustment of the gate switch as follows:
   a. Open the gate.
   b. Loosen the two screws that secure the nylon mounting block of the gate switch to the frame of the line printer.

c. Position the gate switch so that the latch pushes down the lever of the gate switch and the free end of the lever is just short of touching the housing of the gate switch. Secure the gate switch in place.

d. Repeat steps 6a through 6c for the other gate switch, if required.

e. Close the gate.

f. Press the START indicator/switch. Check that the START indicator illuminates.

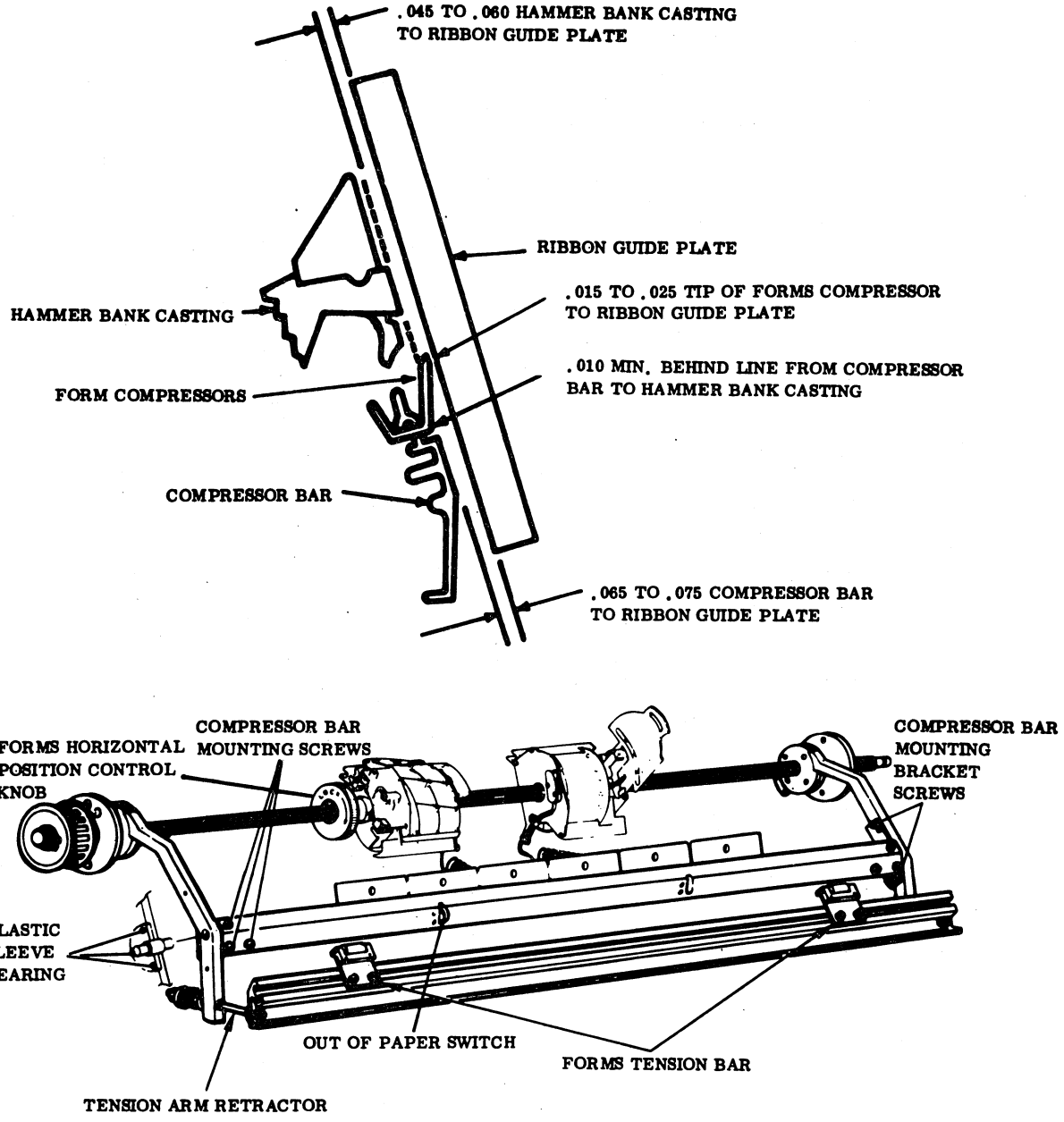

Figure 6F-56. Line Printer Paper Path and Out-of-Paper Switch

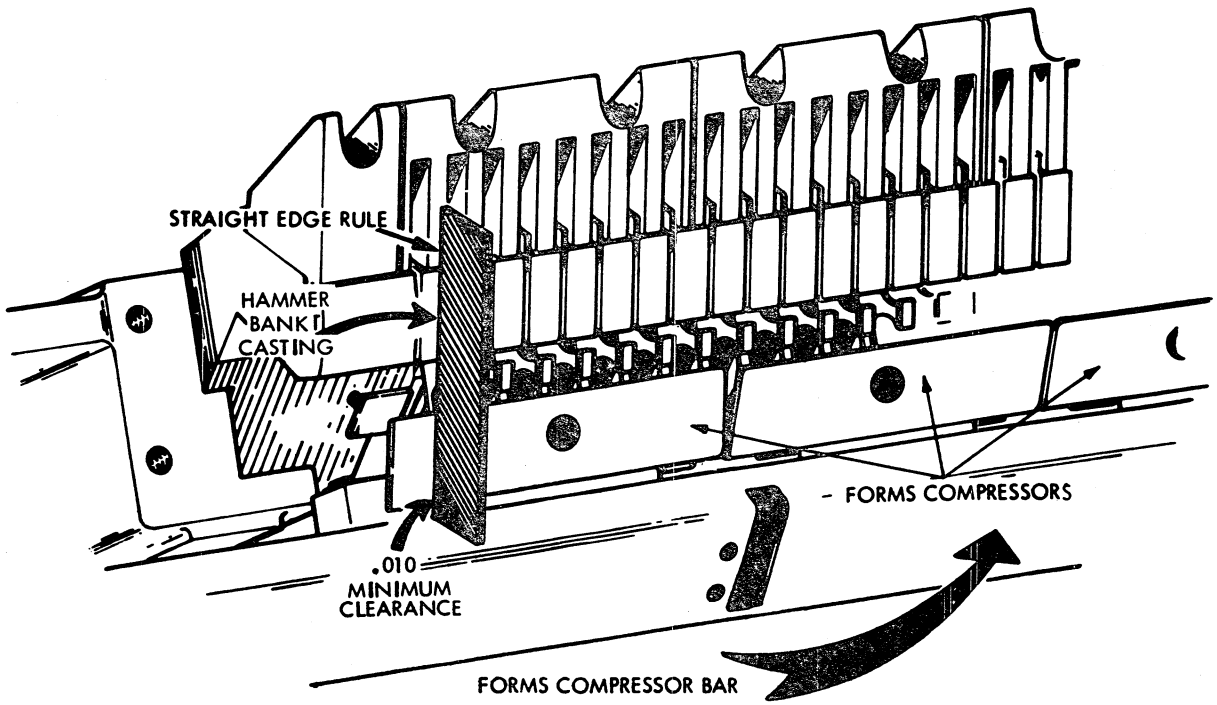

Figure 6F-57. Line Printer Forms Compressor Bar Diagram

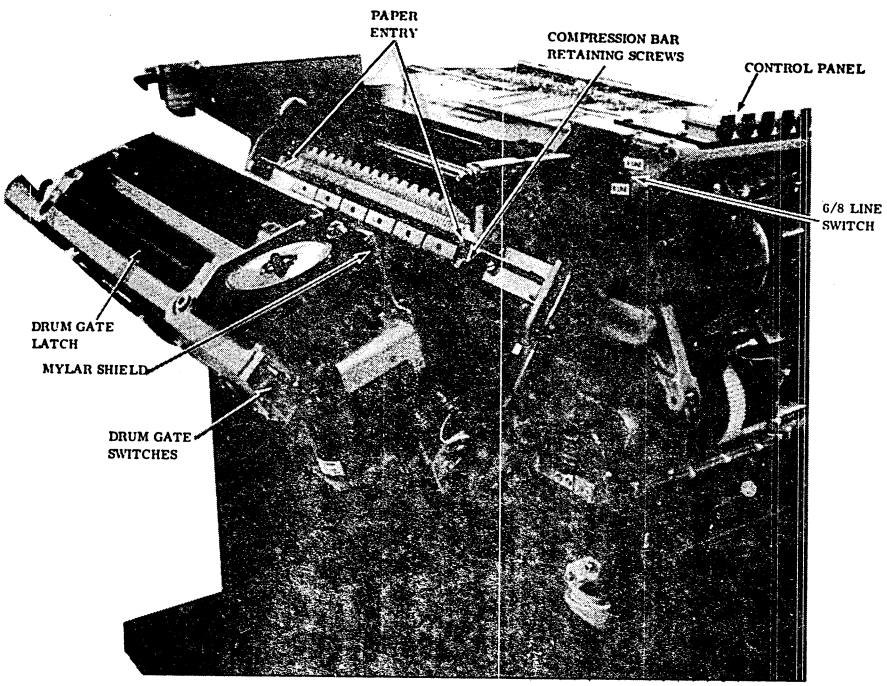

Figure 6F-58. Drum Gate Assembly (Drum Gate Cover Removal)

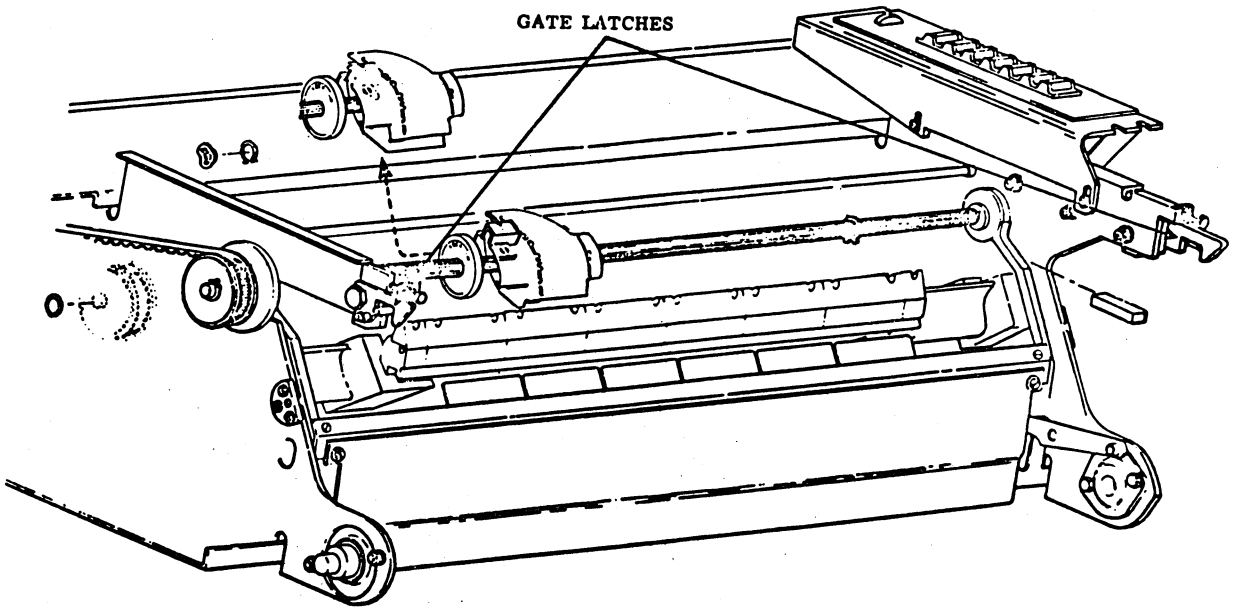

Figure 6F-59. Line Printer Drum Gate Latches

F43 PRINT DRUM INTERLOCK SWITCH CHECK

To check the print drum interlock switch (IS07), perform the following:

1. With ac power on, open the front line printer access door.
2. Visually check that the line print drum is turning.
3. Open the drum gate. The print drum should stop turning.
4. Close the drum gate. The print drum should start turning.
5. If the print drum does not turn with the gate closed, check that ac power is present at 1TB07 (figure 6F-60) between points 1 and 5. If voltage is present, the switch is defective. Go to procedure F44.

F44 PRINT DRUM INTERLOCK SWITCH REPLACEMENT

To replace the print drum interlock switch (IS07), perform the following:

1. Turn ac power off (procedure F2).
2. Open the front line printer access door.
3. Open the drum gate.
4. Locate IS07 (figure 6F-61).
5. Remove the two wires connected to IS07 at 1TB07, making sure to mark where each wire is to be replaced on 1TB07.
6. Remove the two screws holding the switch in place.
7. Replace the switch by replacing the screws and tighten.
8. Replace both wires in 1TB07 using the markings in step 5 as a guide.
9. Turn ac power on and check that the print drum starts turning as the gate is positioned to its normal position.

F45 6-LINE/8-LINE SWITCH REPLACEMENT

To replace the 6/8 LINE switch, perform the following:

1. Turn ac power off (procedure F2).
2. Open the front line printer access door.
3. Open the gate.
4. Remove the paper guide grill at the rear of the line printer.

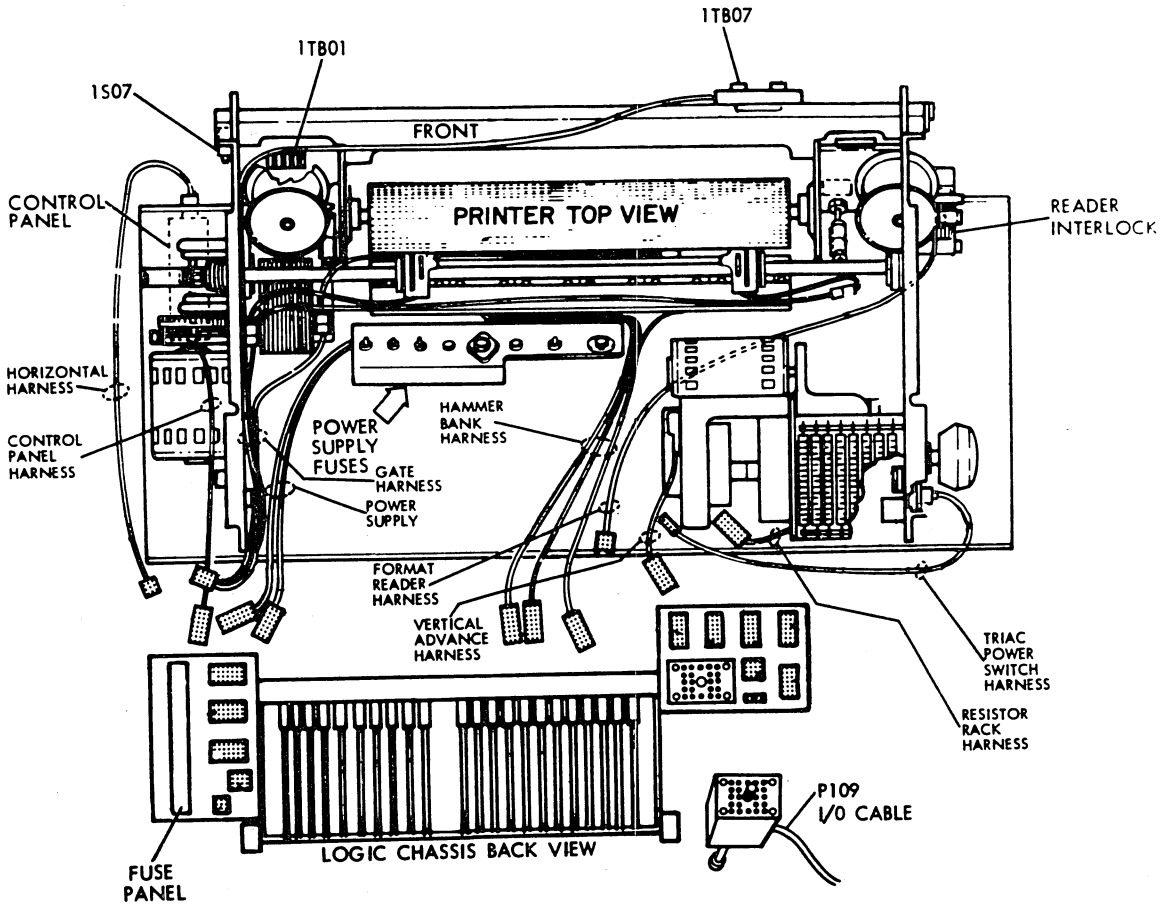

Figure 6F-60. Print Drum Interlock Switch (IS07)

5. Swing the top of the panel cover open.

6. Locate the 6/8 LINE switch (figure 6F-62).

7. Check the continuity of the switch of the center post to each outside leg as the switch is toggled.

8. If one of the legs does not show continuity to the center leg or shows continuity in either or both switch settings, continue to replace the switch.

9. Record the wire positions, mark the up position as six-line, and unsolder each wire.

10. Remove the switch by removing the securing hex nut holding it in place.

11. Replace the switch, secure it, and replace the wires using the wiring indications from step 9.

12. Return the line printer to its normal state. Turn the power on and check that the switch is working.

F46 LOGIC BLOWER MOTOR REMOVAL

To remove the logic blower, perform the following:

CAUTION

Make sure that the ac line cord is disconnected.

1. Refer to procedure F11, steps 1 through 14.

2. Remove three screws holding the Triac assembly to the line printer chassis (figure 6F-63).

3. Remove the two nuts on the outside of the line printer chassis that hold the resistor array assembly. Set the resistor array on the paper drive assembly. Do not disconnect or put strain on the wires.

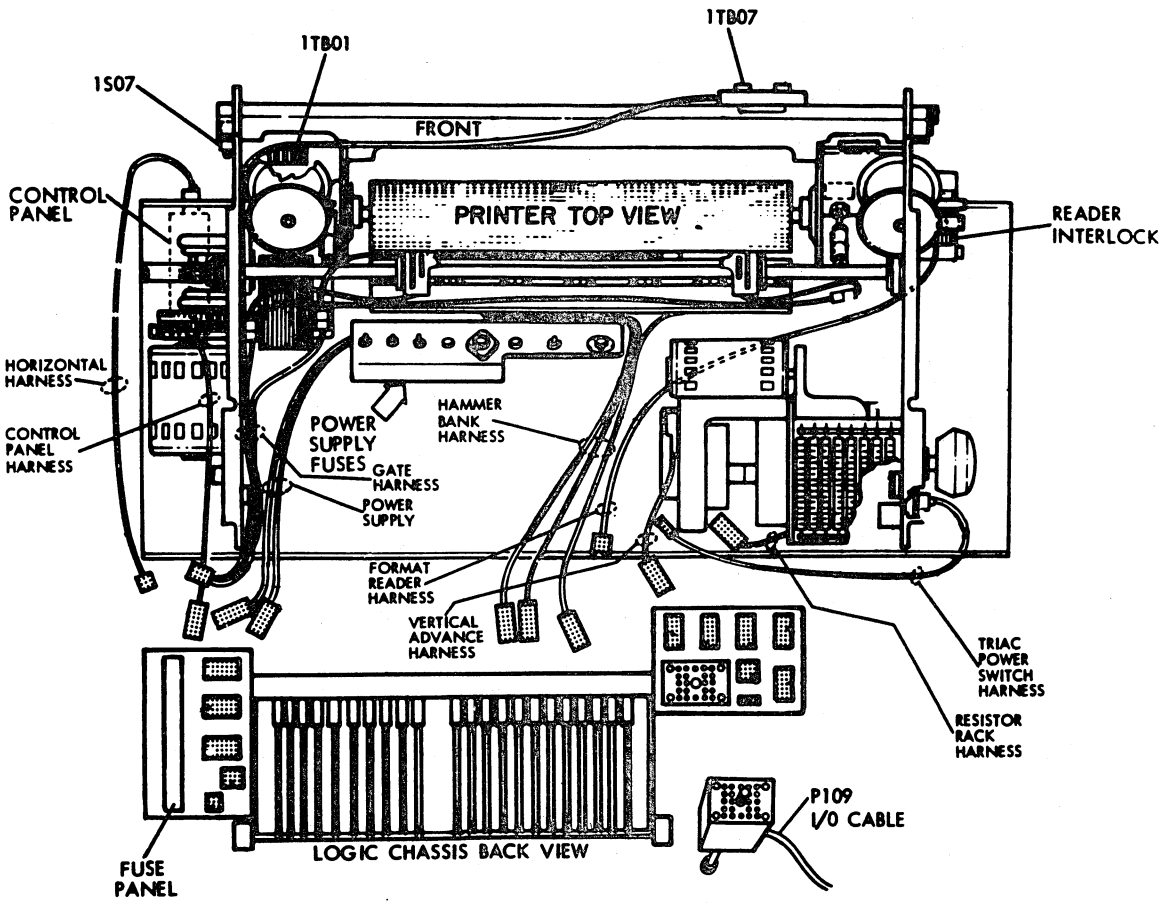

Figure 6F-61. Print Drum Interlock Switch (Replacement)

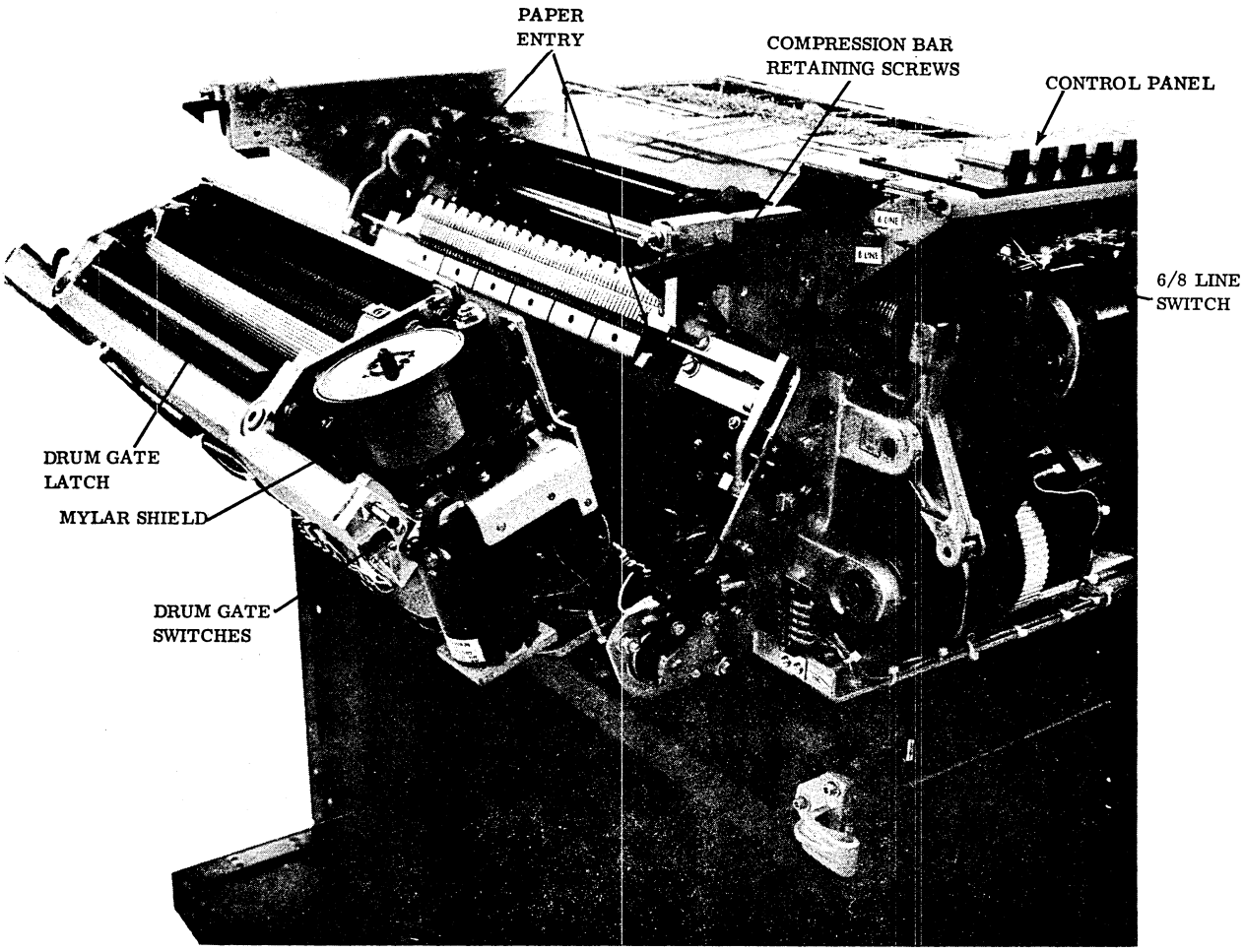

Figure 6F-62. 6 LINE/8 LINE Switch

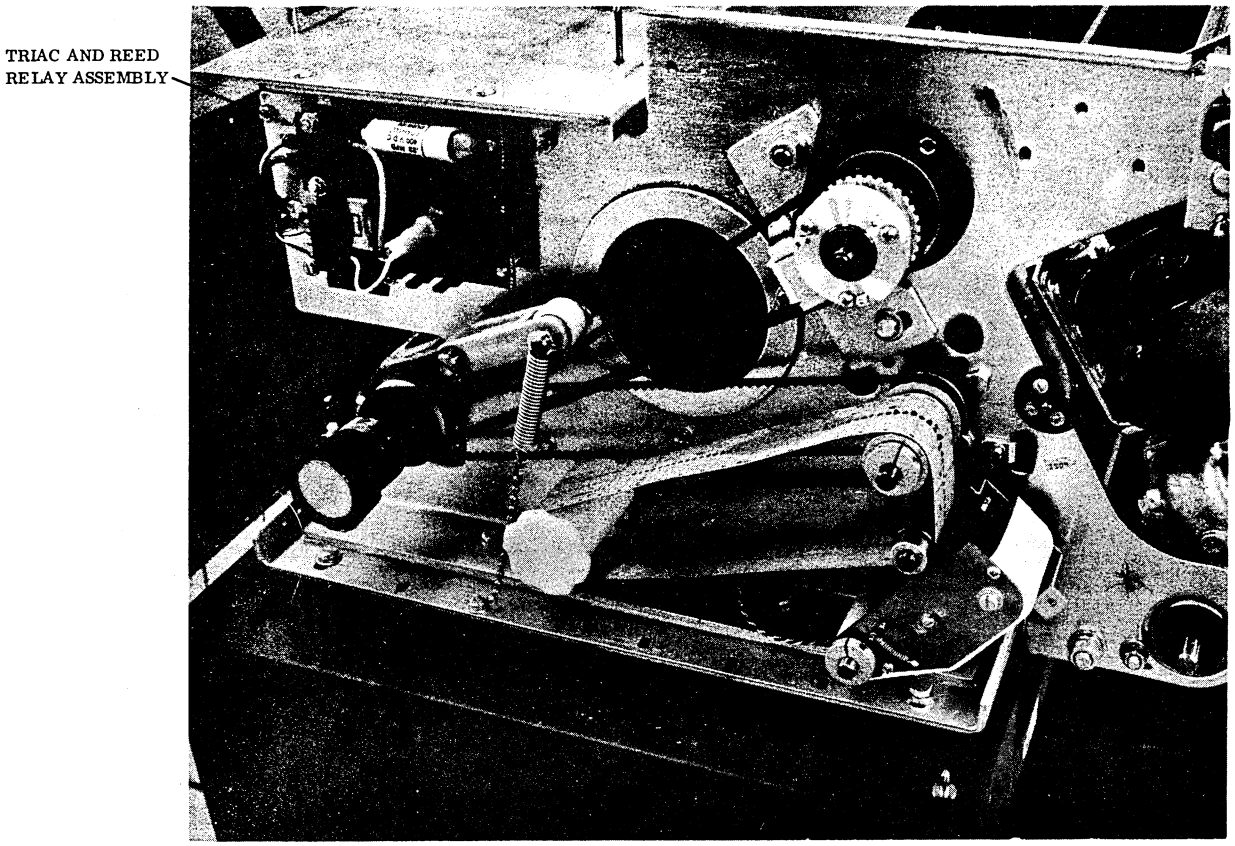

Figure 6F-63. Triac Assembly

4. Remove the rear nut and screw holding the thermal switch/RF1 bracket to the chassis. Tilt the rear of the bracket up for better access to the front screw. Remove the front screw.

5. Lift the bracket up and set on the paper motion assembly.

6. Disconnect the motor wires at 1TB03. Note the position and color code.

7. Remove the two screws holding the grill and blower motor. Remove the grill and plates.

8. Remove the motor.

9. Install the new motor in reverse order.

F47 FORMAT TAPE PREPARATION

Format tapes are prepared from CDC format tape (part number 44713800) or a suitable equivalent. Holes are located on the tape by using a CDC tape punch (part number 44870300) or to tolerances shown in figure 6F-64. To prepare the format tape, perform the following:

1. Punch holes at either six or eight lines per inch. The holes must be located in line with the reference marks on the format tape as shown in figure 6F-65.

   NOTE

   Every third six-line-per-inch position on the tape is aligned with an eight-line-per-inch position. This is referred to as the coincident line.

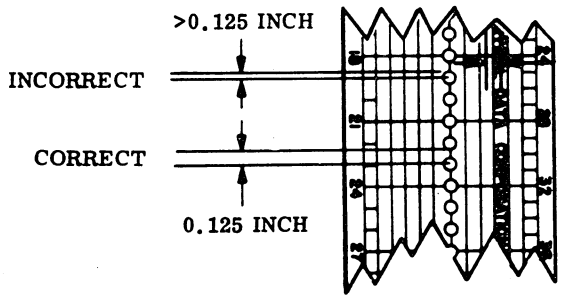

Figure 6F-64. Format Tape Hole Tolerances

The minimum space permitted between center lines of holes is one-eighth inch. This is especially important if some channels on the tape are punched at eight lines per inch while others are punched at six lines per inch, and it is necessary to change from an eight-line-per-inch channel to a six-line-per-inch channel. (One-eighth inch corresponds to the minimum forms advance.)

Figure 6F-66 illustrates an example of format tape levels.

2. Splice the tape so that its loop length is exactly equal to the form length, or an even multiple of it, independently of whether it is punched at six lines per inch or eight lines per inch. Splice the loop as follows:

   a. Apply a thin even coat of Fast Tack Adhesive where indicated on the format tape and also to the corresponding underside of the other end of the tape (see figure 6F-67). Allow the adhesive to dry until tacky.

   b. Press the surfaces together.

   c. Clean the excess adhesive off the format tape with Chlorothene-Nu solvent.

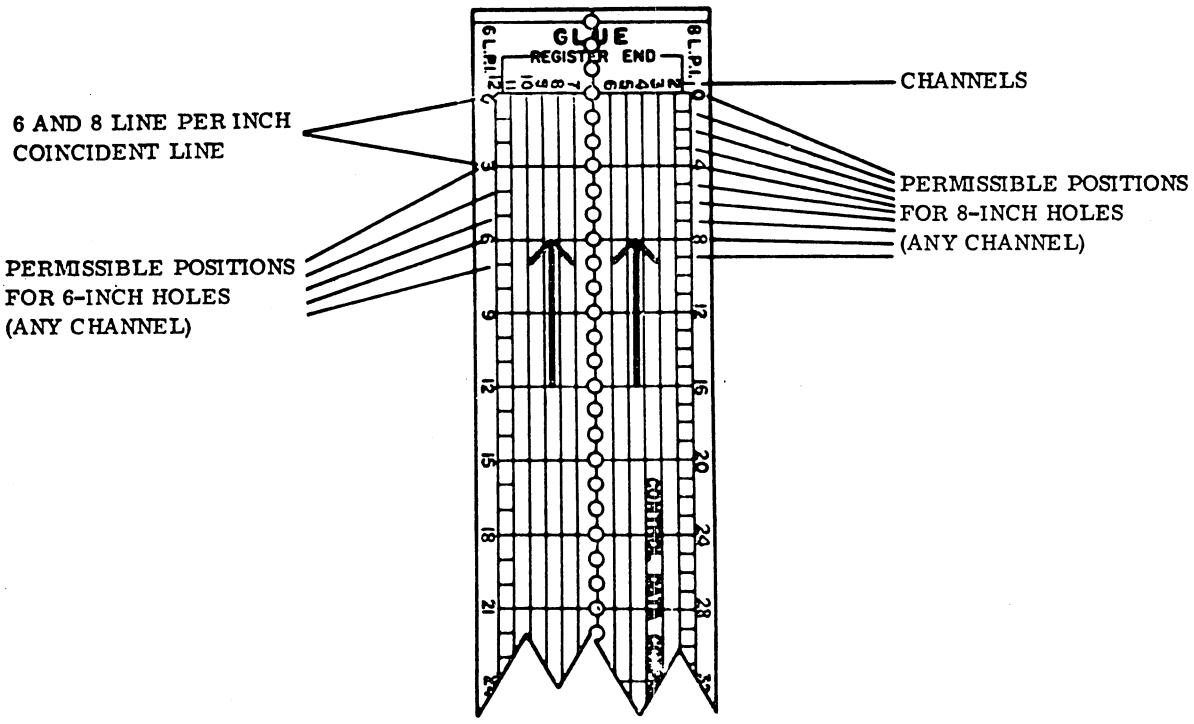

Figure 6F-65. Format Tape Reference Marks

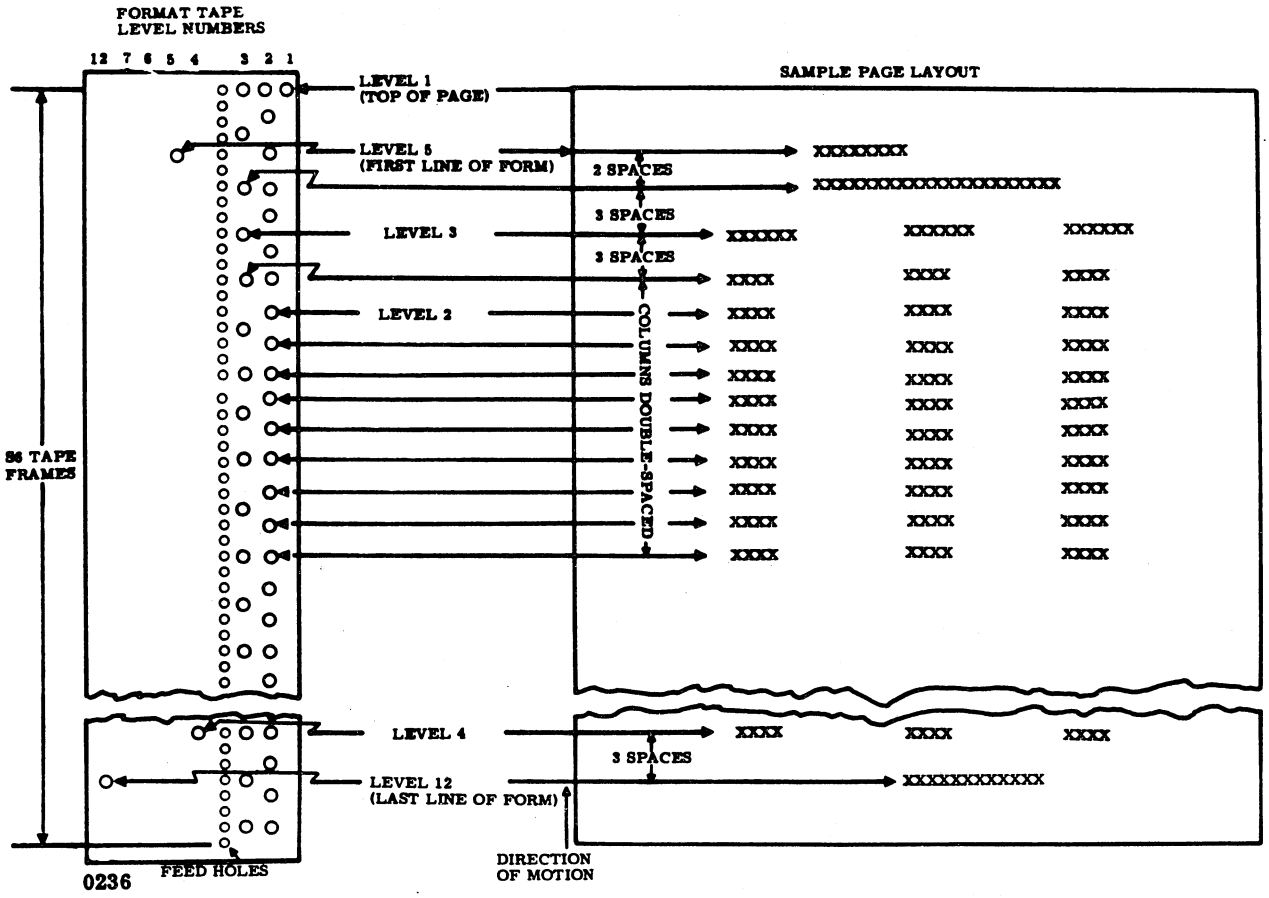

Figure 6F-66. Format Tape Levels

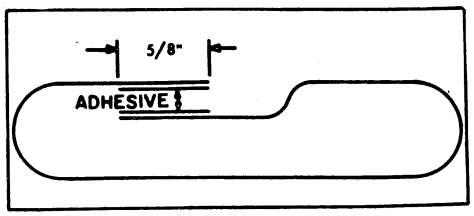

Figure 6F-67. Format Tape Splicing

MAGNETIC TAPE TRANSPORT PROCEDURES 6G

CONTENTS

Procedure		Page
G1	Magnetic Tape Transport Cleaning	6G-1
G2	Power Switch Replacement	6G-3
G3	Subsystem Cable Inspection	6G-3
G4	Power Inspection and Checks	6G-3
G5	Loading Procedure	6G-7
G6	Logic Printed Circuit Board Replacement	6G-9
G7	Machine Reel Power Amplifier Replacement	6G-9
G8	File Reel Power Amplifier Replacement	6G-10
G9	Pneumatic Regulator Board Replacement	6G-13
G10	Vacuum Relay Replacement	6G-13
G11	Translator Board Replacement	6G-13
G12	Power Supply Replacement	6G-16
G13	Blower Assembly Removal	6G-17
G14	Blower Assembly Vacuum Adjustment	6G-18
G15	Upper Tape Tachometer (Machine Reel) Removal/ Replacement	6G-18
G16	Machine Reel Tape Tachometer Alignment	6G-20
G17	Lower Tape Tachometer (File Reel) Removal/Replacement	6G-21
G18	File Reel Tape Tachometer Alignment	6G-21
G19	EOT/BOT Sensor Assembly Removal/Replacement	6G-21
G20	EOT/BOT Assembly Alignment	6G-24
G21	Fiber Optic Light Bulb Removal	6G-24
G22	Operators Panel Light Bulb Removal/Replacement	6G-25
G23	File Protect Sensor Assembly Removal/Replacement	6G-25
G24	File/Hub Removal/ Replacement	6G-27
G25	Controller Printed Circuit Board Replacement	6G-27
G26	Operators Panel Removal/ Replacement	6G-27
G27	Power Distribution Box Components Check	6G-28
G28	Triac Power Switch Replacement	6G-28
G29	AC Line Filter Replacement	6G-28
G30	AC Power Sequencer Replacement	6G-28
G31	Power Distribution Box Circuit Breaker Check/Replacement	6G-30
G32	Power Distribution Box Switch Check/Replacement	6G-30
G33	Resistor Assembly Replacement	6G-30

Figure		Page
6G-1	Magnetic Tape Transport Tape Drive, Front View	6G-1
6G-2	Magnetic Tape Transport Tape Load Path	6G-2
6G-3	Magnetic Tape Transport Cabinet Latch Screw	6G-4
6G-4	Translator-to-Magnetic Tape Transport Signal Cable Connection	6G-5
6G-5	Magnetic Tape Transport-to-Tape Controller Signal Cable Connections	6G-6
6G-6	Transport Assembly, Rear View	6G-7
6G-7	Interlock Switch	6G-8
6G-8	Tape Load Path	6G-9
6G-9	Cabinet Latch Screw	6G-10
6G-10	Printed Circuit Board Assembly	6G-11
6G-11	Tape Deck Latch Screw and Vacuum Regulator	6G-12
6G-12	Pneumatic Assembly Showing Vacuum Regulator and Vacuum Relay	6G-14
6G-13	Vacuum Relay Replacement Via the Cabinet Latch Screw	6G-15
6G-14	Translator Board and Power Supply	6G-16
6G-15	Blower Assembly	6G-17
6G-16	Vacuum Gauge Installation	6G-19
6G-17	Upper Tape Tachometer	6G-20
6G-18	Machine Reel Tape Sensor Alignment	6G-21
6G-19	Lower Tape Tachometer	6G-22
6G-20	File Reel Tape Sensor Alignment	6G-23
6G-21	End-of-Tape/Beginning-of-Tape Sensor Assembly	6G-23
6G-22	End-of-Tape/Beginning-of-Tape Assembly	6G-24
6G-23	Fiber Optic Light Bulb	6G-25
6G-24	Magnetic Tape Transport Operator Panel Indicators	6G-26
6G-25	File Protect Sensor Assembly and File Hub	6G-26
6G-26	Power Distribution Box Assembly	6G-29

G1 MAGNETIC TAPE TRANSPORT CLEANING

The following procedures are used to inspect and clean the magnetic tape transport (figure 6G-1).

1. Using a cotton swab moistened with isopropyl alcohol (99 percent pure), clean the following areas (figure 6G-2):

   a. Tape cleaner – Ensure that all dirt particles are removed from the grooves.

   b. Loop column phototransistors – Remove all oxide build-up.

   c. Tape guide spring-loaded flanges – Push back the flange, and brush it clean. Remove all oxide build-up around the flange and the stainless steel post.

   d. End of tape/beginning of tape (EOT/BOT) sensors – Brush the grooves clean around the sensors to remove all oxide build-up (figures 6G-1 and 6G-2).

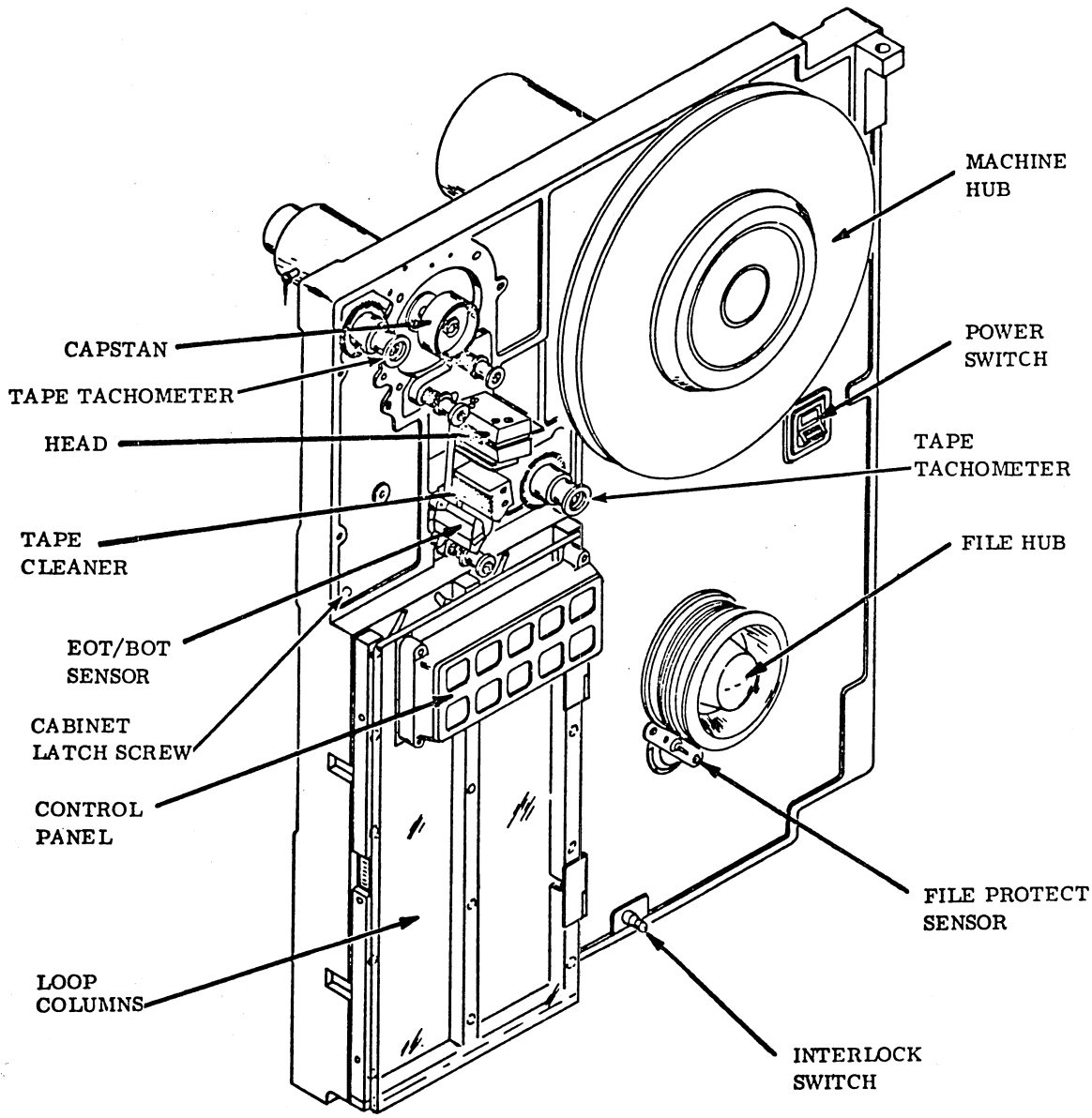

Figure 6G-1. Magnetic Tape Transport Tape Drive, Front View

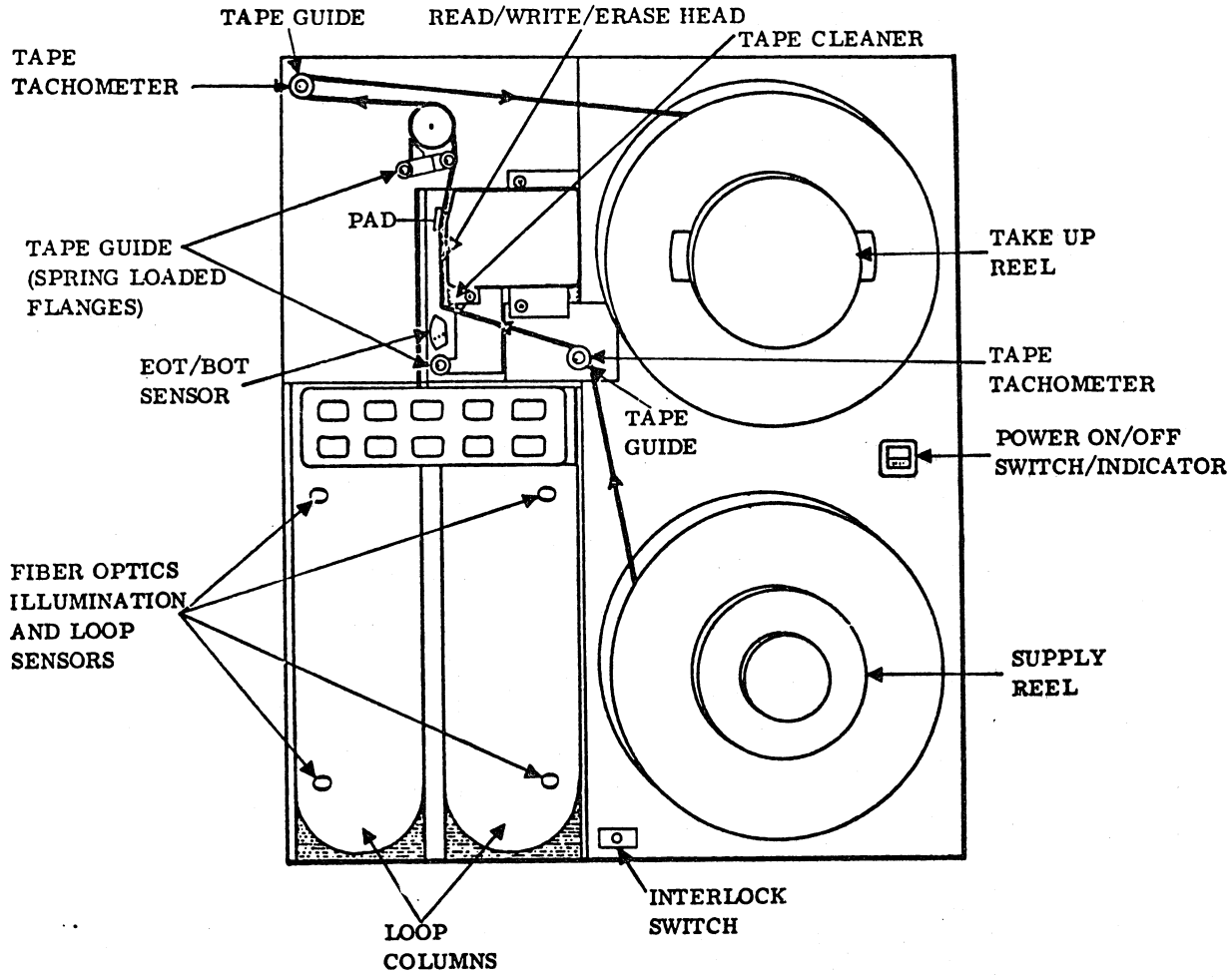

Figure 6G-2. Magnetic Tape Transport Tape Load Path

2. Using a lint-free cloth (Kimwipe) moistened with isopropyl alcohol (99 percent pure), clean the following areas:

   a. Read/write/erase heads - Wipe head surfaces clean (figure 6G-2).

   b. Tape guides and tape cleaner - Wipe clean to remove dirt particles. Use a brush to loosen particles if necessary (figure 6G-2).

   c. Loop column glass - Wipe the glass clean (figure 6G-1).

   d. Tape tachometers - Wipe the tape tachometers clean (figure 6G-1).

   e. End of tape/beginning of tape sensor - Wipe the sensor prism clean (figure 6G-1).

CAUTION

Do not touch the outside diameter (tape contact surface) or the capstan with fingers. Use a screwdriver in the capstan shaft slot to rotate the capstan. Use a soft, lint-free wiper when handling the capstan.

   f. Capstan - While holding a moistened cloth against the capstan tape contact surface, insert a screwdriver into the slot on the end of the capstan shaft and rotate it through several revolutions (figure 6G-1).

   g. Loop column bed - Wipe the loop column bed clean.

3. Using a penlight or equivalent and a magnifying glass, inspect the following areas for oxide build-up or damage:

   a. Tape path – Check the head surfaces, guide post, and flanges for scratches, burrs, etc. (figure 6G-2).

   b. Tape tachometers – Ensure free rotation without noise.

   c. Loop columns – Make sure the tape on the loop columns is not tearing.

   d. Reel flanges – Ensure the tape does not rub against the reel flanges.

4. Observe the tape tracking for the following:

   a. There is no visible side movement of the tape across the capstan when the tape is moved in the forward and reverse directions.

   b. There is no excessive rubbing of the tape on either reel side.

   c. There is no twisting or binding while the tape moves through the tape guides.

G2 POWER SWITCH REPLACEMENT

1. Pull open front glass case of Deck Cabinet.
2. Unlock and swing out the tape deck by turning the cabinet latch screws counterclockwise (fig. 6G-3) and pulling out on the transport assembly.
3. Locate power switch (fig. 6G-2)
4. Label locations of S-1 Cable Connections on power/ON/OFF switch connectors
5. Remove S-1 cable from switch connectors.
6. Press top and bottom of switch simultaneously, and push switch forward. Switch should slide out easily to front of Deck Cabinet.
7. Replace S-1 cable to new switch connectors and reverse procedure 6.

G3 SUBSYSTEM CABLE INSPECTION

To inspect the magnetic tape transport subsystem cable, perform the following.

1. Unlock and swing out the tape deck by turning the cabinet latch screw clockwise (figure 6G-3).

2. Verify that all logic board cage backplane pin connectors are properly connected and fully seated (figure 6G-4).

3. Verify that the two cables (control and data) between the translator board and the transport logic board cage are properly connected and fully seated.

4 Verify that the interface cable between the processor, controller board, and magnetic tape transport translator board is properly connected according to the connector identification tags and that they are fully seated (figure 6G-5).

5. Close the transport tape deck, and secure by turning the latch screw counterclockwise.

G4 POWER INSPECTION AND CHECKS

Before performing this procedure, the magnetic tape transport must be connected to a compatible power source.

1. Press the power switch, and observe the following:

   a. The power on switch should illuminate. If it does not illuminate, replace the bulb/switch (procedure G2).

   b. The EOT/BOT indicator should illuminate.

   c. The loop box sensor lights should illuminate.

2. With a voltmeter, test the following voltages at the listed terminals (figure 6G-6):

Location	Voltage Test	Terminals +Probe	Terminals -Probe
Card cage backplane	-5 V dc	E1	E4
Card cage backplane	+5 V dc	E5	E1
Card cage backplane	-12 V dc	E1	E2
Card cage backplane	+12 V dc	E3	E1
Machine reel power amplifier (upper)	+40 V dc	E2	E1
Capstan power amplifier	+40 V dc	E2	E1
File reel power amplifier (lower)	+40 V dc	E3	E1

3. If voltage is not present, go to procedure G27.

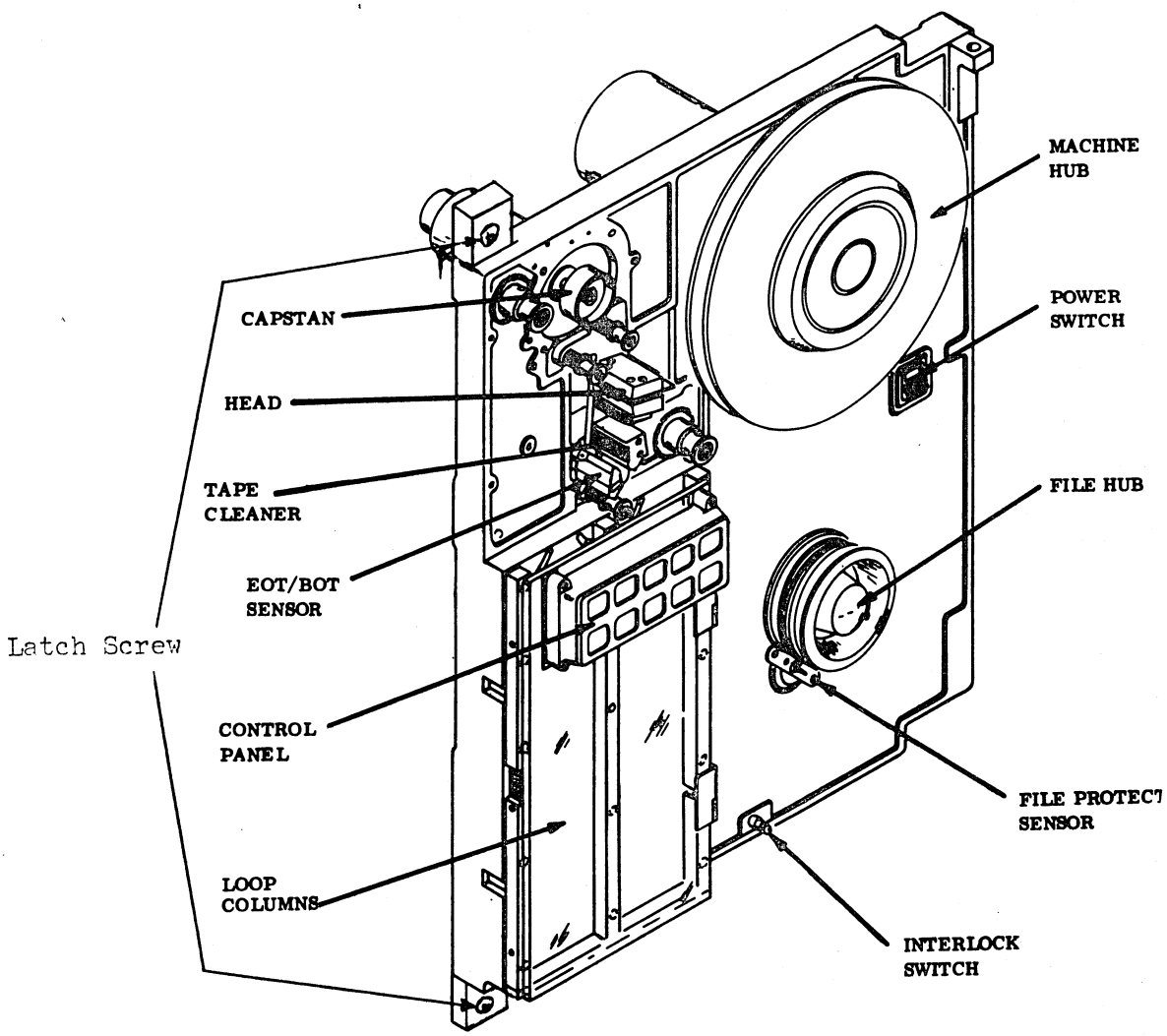

Figure 6G-3. Magnetic Tape Transport Cabinet Latch Screw

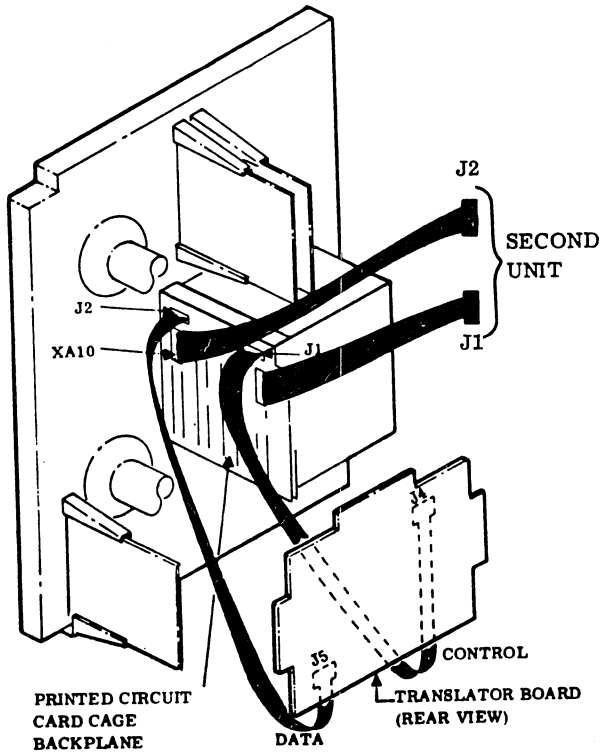

Figure 6G-4. Translator-to-Magnetic Tape Transport Signal Cable Connection

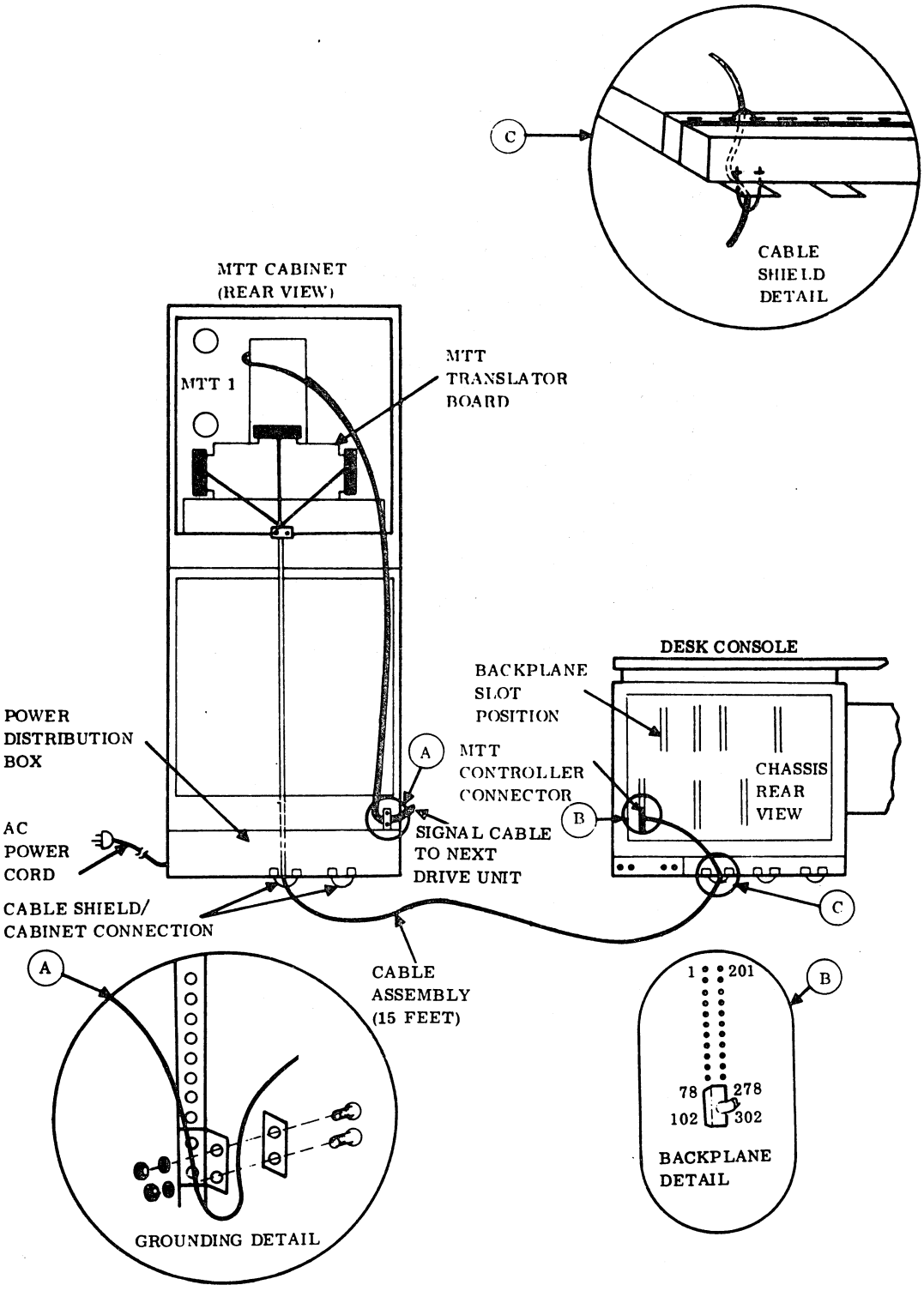

Figure 6G-5. Magnetic Tape Transport-to-Tape Controller Signal Cable Connections

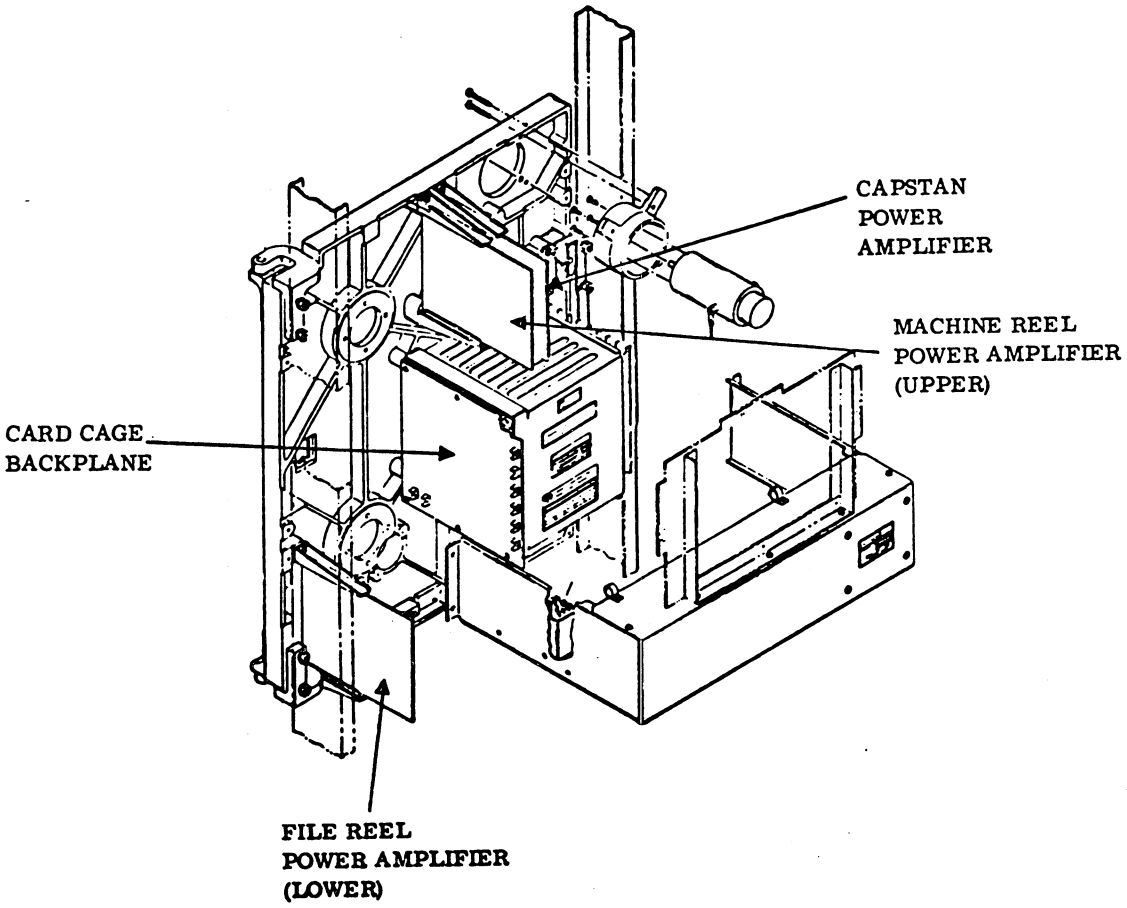

Figure 6G-6. Transport Assembly, Rear View

G5 LOADING PROCEDURE

To thread the tape, perform the following:

1. Open the front door of the transport to permit access to the tape deck.
2. Pull out the cabinet door interlock switch (figure 6G-7).
3. Install the write enable ring within the inner surface cutout if a write operation is to be performed.

● NOTE

The write enable ring is to be installed only if a write operation is to be performed. Ensure that valuable data has not been stored on the reel before a write operation.

4. Place the file reel onto the supply reel hub. Ensure that the file reel is fully seated against the supply hub face. Push the hub in to lock the reel in place.
5. Manually rotate the machine reel hub clockwise, and thread the tape (figure 6G-8).
6. Wind at least three full wraps of the tape onto the tape-up reel

To turn the power on and load the tape, perform the following:

7. With the tape threaded, press the power switch (figure 6G-7) and close the front door. The power indicator will illuminate, and the tape should load properly.
8. Touch the LOAD/REWIND touch control pad. The tape will load into the vacuum column and move forward until beginning-of-tape is reached. The BOT/EOT indicator will illuminate.

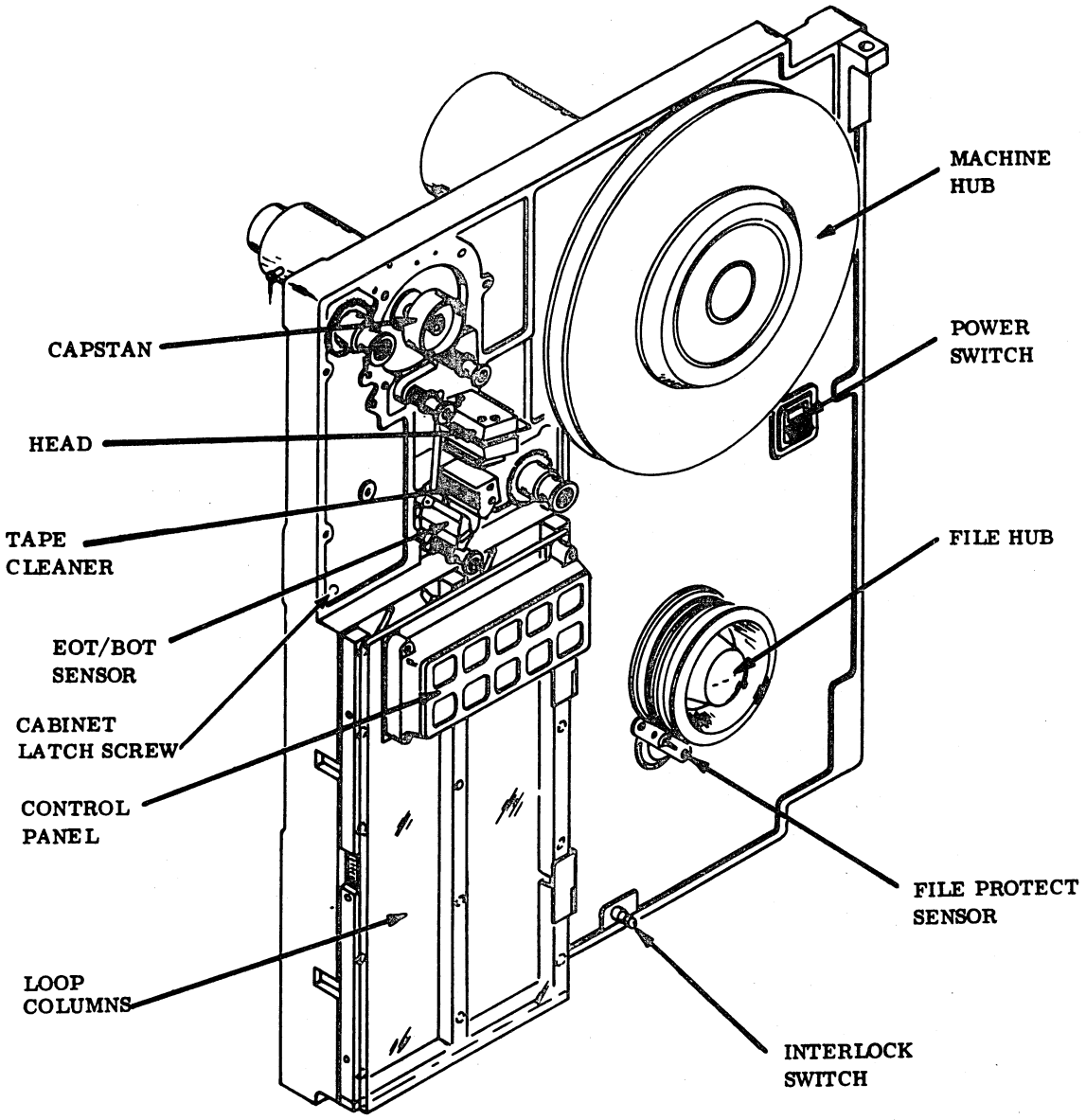

Figure 6G-7. Interlock Switch

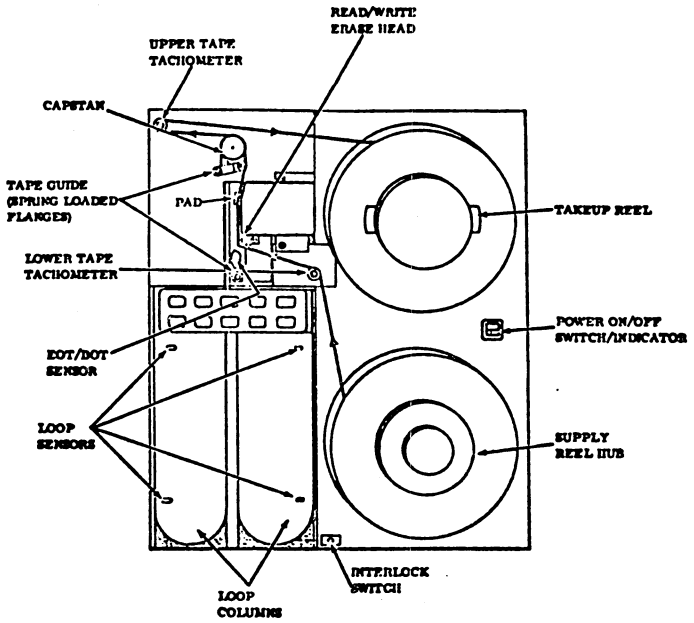

Figure 6G-8. Tape Load Path

G6 LOGIC PRINTED CIRCUIT BOARD REPLACEMENT

To replace the magnetic tape transport logic printed circuit board, perform the following:

1. Note the DDLT that prompted this action (sheet and action number).
2. Unload the tape by touching the UNLOAD touch control pad when in the off-line condition. When the tape is rewound from the take-up reel, the magnetic tape transport may be placed in a power down condition by pressing the main power switch off.
3. Unlock and swing out the tape deck by turning the cabinet latch screw clockwise (figure 6G-9).
4. Locate the printed circuit board assembly (in the middle rear of the tape deck, figure 6G-10).
5. Carefully pull out the old printed circuit board, identify the card location and magnetic tape transport serial number and log the information on the running time meter on a defective parts tag.
6. Visually verify that the spare printed circuit board is identical to the one removed and has the correct part number.
7. Insert the spare logic board in the card slot, component side to the tape deck, and push it into the card slot so that the board is completely seated into the backplane connector. Be sure the board is fully inserted (the board edges are flush together).
8. Swing the tape deck back into the housing rack and lock it.
9. Watch out for mechanical or electrical disconnects that could have been caused by swinging the tape deck in and out. See procedure G3 for cable inspection.
10. Power up the magnetic tape transport and load the tape (procedure G5).
11. Return to DDLT section that prompted this action.

NOTE

The printed circuit boards in locations 4 through 10 require electrical adjustments. If any of these boards are to be replaced, technical assistance and an oscilloscope are required to adjust the delay circuits using a tape exercise or computer program.

G7 MACHINE REEL POWER AMPLIFIER REPLACEMENT

To replace the machine reel power amplifier, perform the following:

1. Note the DDLT section that prompted this action (sheet and action number).
2. Unload the tape by touching the UNLOAD touch control pad when it is in an off-line condition. When the tape is rewound from the tape-up reel, the transport may be placed in a power down condition by pressing the main power switch.
3. Unlock and swing out the tape deck by turning the cabinet latch screw clockwise (figure 6G-11).

4. Disconnect and tag each cable as it is removed.
5. Remove the board.
6. Install a new board with the component side toward the machine reel motor.
7. Reconnect all cables disconnected in step 4 above.

G8 FILE REEL POWER AMPLIFIER REPLACEMENT

To replace the file reel power amplifier, follow the same steps for procedure G7. Observe that the component side of the board is toward the file reel motor.

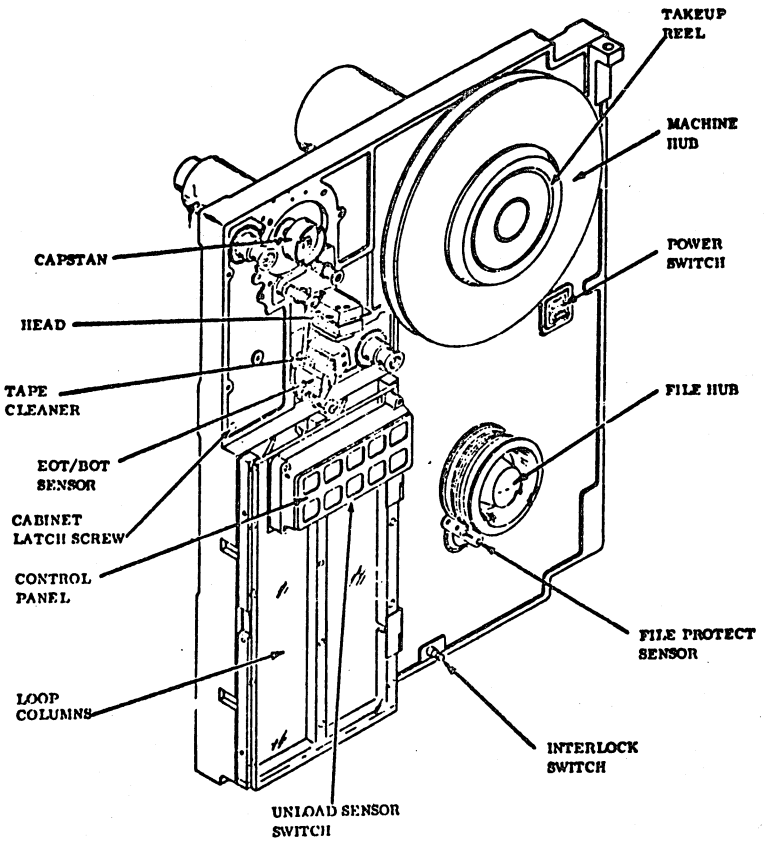

Figure 6G-9. Cabinet Latch Screw

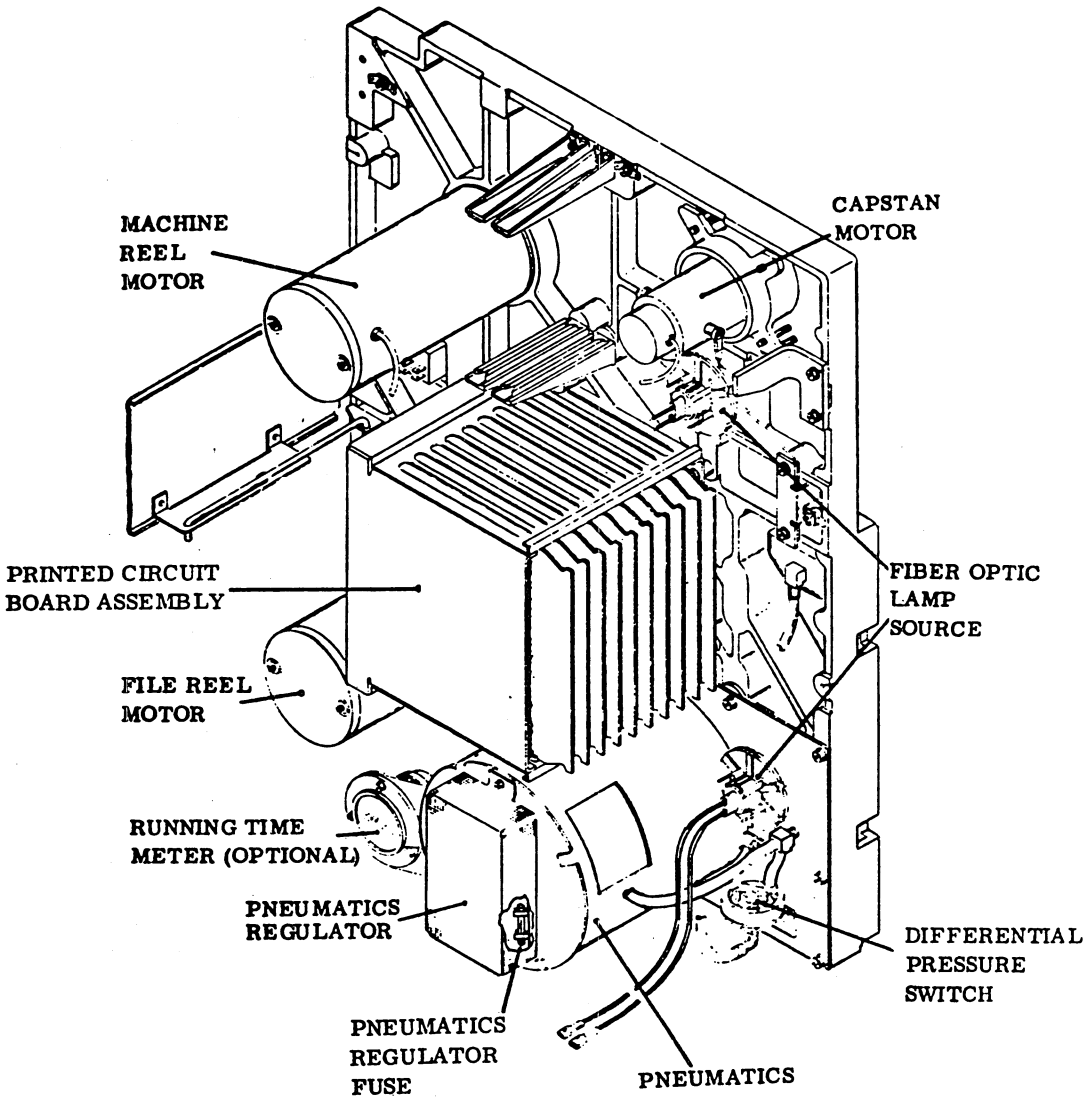

Figure 6G-10. Printed Circuit Board Assembly

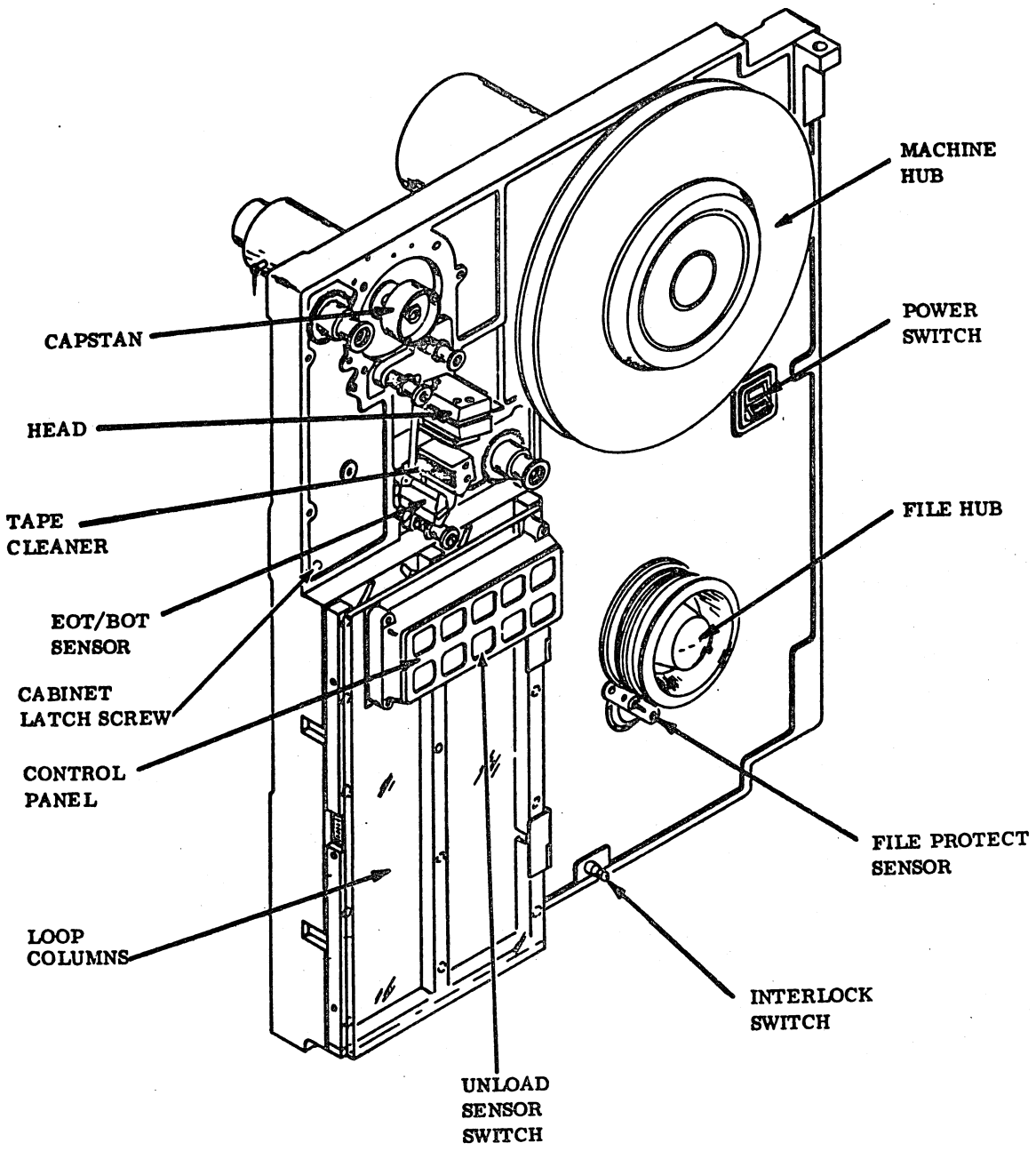

Figure 6G-11. Tape Deck Latch Screw and Vacuum Regulator

G9 PNEUMATIC REGULATOR BOARD REPLACEMENT

To replace the pneumatic regulator board, perform the following:

1. Note the DDLT section that prompted this action (sheet and action number).
2. Unload the tape by touching the UNLOAD touch control pad when it is in an off-line condition. When the tape is rewound from the take-up reel, the transport may be placed in a power down condition by pressing the main power switch.
3. Unlock and swing out the tape deck by turning the cabinet latch screw clockwise (figure 6G-11).
4. Remove the pneumatic voltage regulator shield (figure 6G-12).
5. Disconnect and label all wires removed from the regulator board.
6. Dismount the pneumatic regulator board and replace it with a new one. Verify that the frequency jumper is installed in the same way as the board that was removed.
7. Reconnect all wires removed in step 5.
8. Reinstall the cover.
9. Adjust according to procedure G14.

G10 VACUUM RELAY REPLACEMENT

To replace the vacuum relay (figure 6G-12), perform the following:

1. Note the DDLT section that prompted this action (sheet and action number).
2. Unload the tape by touching the UNLOAD touch control pad when it is in an off-line condition. When the tape is rewound from the take-up reel, the transport may be placed in a power down condition by pressing the main power switch.
3. Unlock and swing out the tape deck by turning the cabinet latch screw clockwise (figure 6G-13).
4. Disconnect the vacuum relay; do not remove the wires.
5. Mount a new relay.
6. One at a time, disconnect the wires from the old vacuum relay and reconnect them to the new relay, pin for pin.

G11 TRANSLATOR BOARD REPLACEMENT

To replace the translator board (figure 6G-14), perform the following:

1. Note the DDLT section that prompted this action.
2. Open the rear magnetic tape transport cabinet doors.
3. Determine which translator board is to be replaced if there are multiple tape drives in the system. The translator board is mounted on top of the magnetic tape transport power supply in the rear of the transport. One translator board can only handle one of the following types of transports:

   Nine-track 800 bits-per-inch transport, equipment number BW303

   Seven-track 800 bits-per-inch transport, equipment number BW101

4. Unload and power down all transports connected to the translator board located in step 3 above.
5. Unlock and swing out the magnetic tape transport tape deck that houses the translator board.
6. Mark all cables connected to the translator board (if not already marked), and sketch the cable connections on scratch paper. Remove the cables from the board.
7. Unscrew and save the three screws holding the translator board on the power supply.
8. Attach a defective parts tag to the board identifying the magnetic tape transport serial number, translator serial number, action code number of the action that caused removal, and magnetic tape transport running time meter information.
9. Verify visually that the original and replacement boards are identical.
10. Mount the new translator board on the power supply using the screws saved in step 7.
11. Replace the cable connectors using the sketch made in step 6. Also see procedure G3 for cabling information.
12. Swing in the magnetic tape transport tape deck and lock it. Be careful not to disconnect cables when swinging in the tape deck.

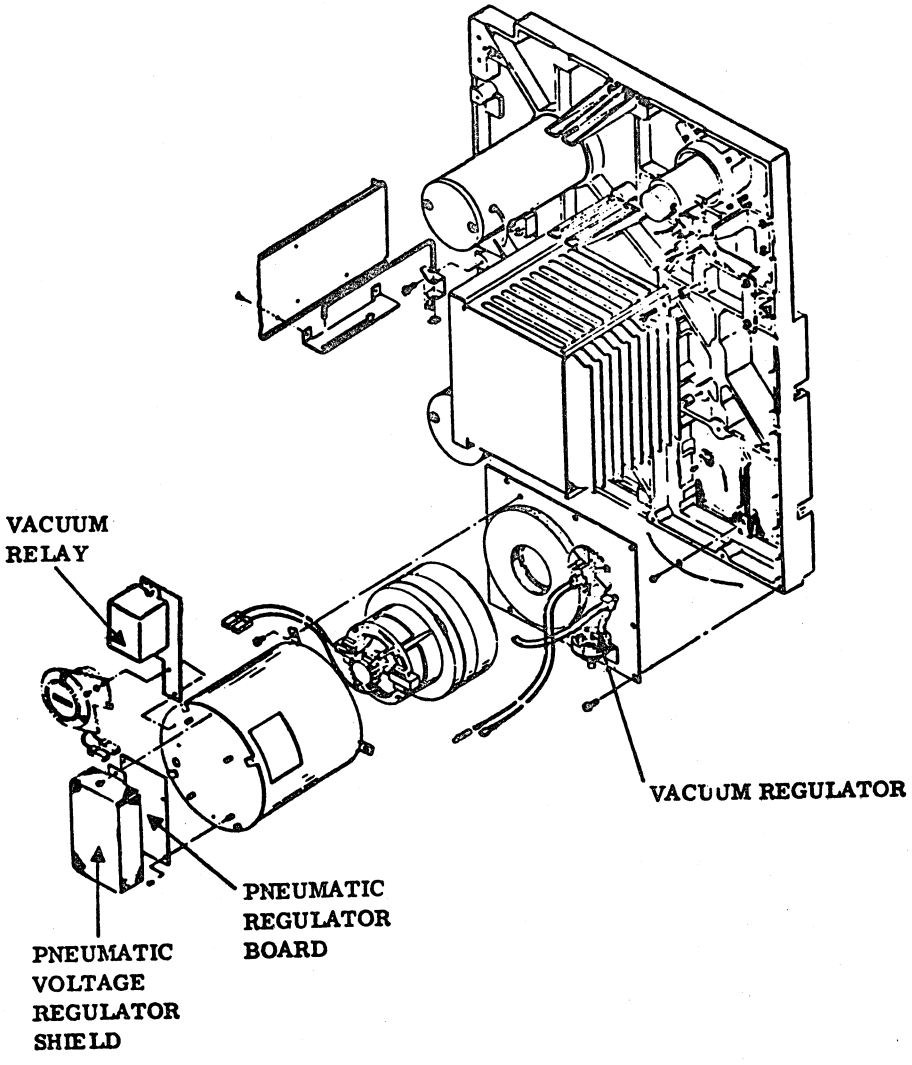

Figure 6G-12. Pneumatic Assembly Showing Vacuum Regulator and Vacuum Relay

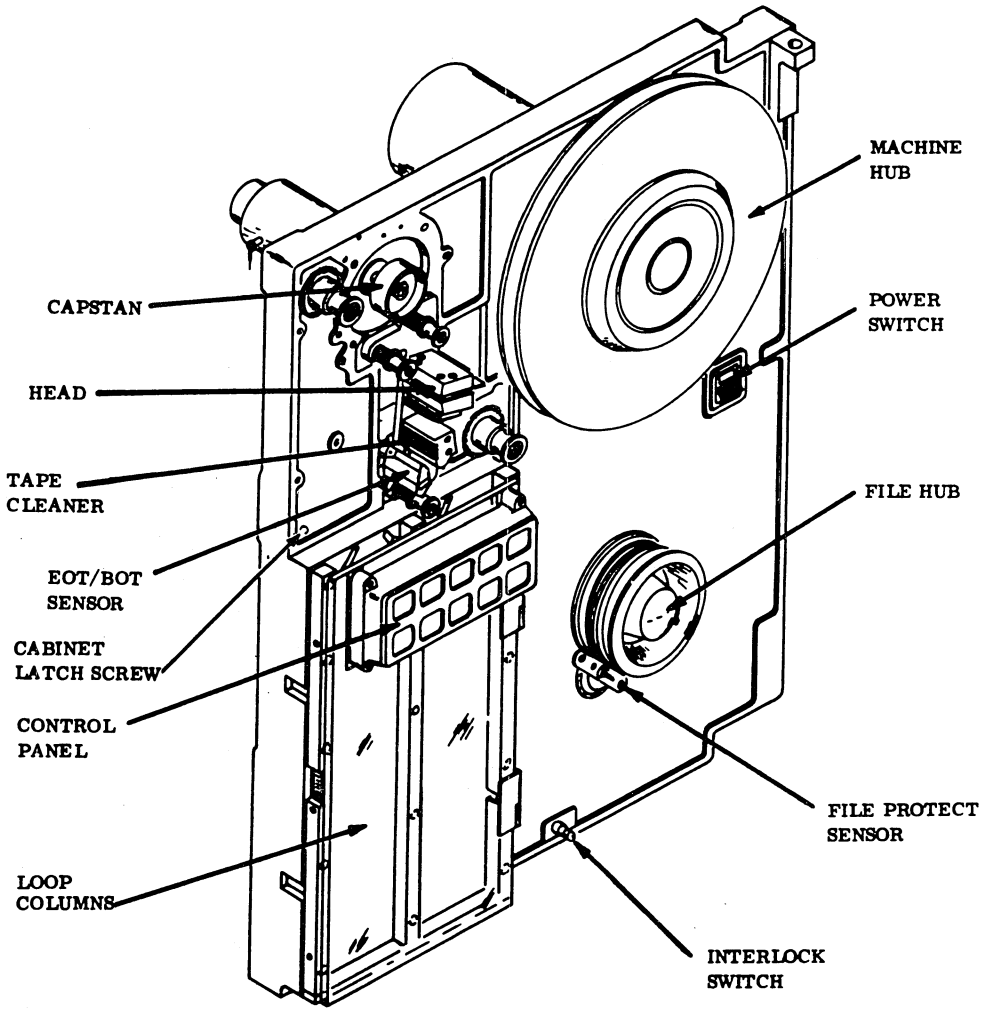

Figure 6G-13. Vacuum Relay Replacement Via the Cabinet Latch Screw

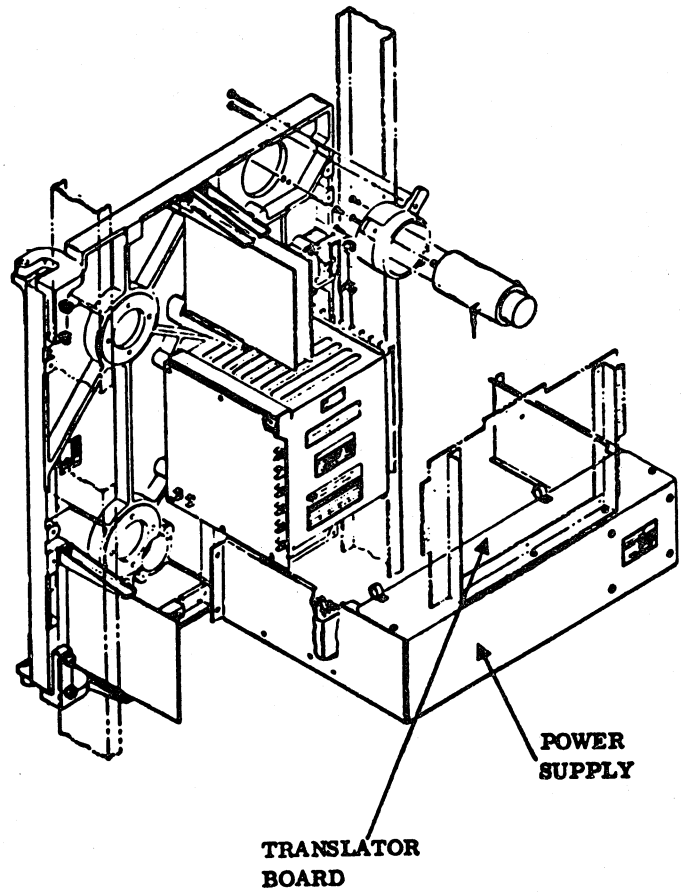

Figure 6G-14. Translator Board and Power Supply

13. Close the rear cabinet doors.

14. Turn on the power to the magnetic tape transports, and reload tapes as required (procedure G5).

15. Return to the DDLT section that prompted this action.

NOTE

The translator board may need adjustments requiring an oscilloscope and a computer exercising program. In this case, a support customer engineer is required.

G12 POWER SUPPLY REPLACEMENT

To replace the power supply (figure 6G-14), perform the following:

1. Turn off the transport power.

2. Swing out the tape unit, and open the rear door.

3. Disconnect the power cable to the power supply and ground connection from the power supply.

4. Disconnect the wiring harness running from the tape unit to the power supply (three connectors).

5. Remove and label the two wires running from the power supply to the front of the translator board.

6. Remove the cable running from the processor to the translator board at the translator board end (label the cable if it is not already marked).

7. Remove the black ribbon cables going from the tape unit to the translator board.

8. Remove the translator board from the power supply by removing the three screws located in the back of the power supply.

9. Remove the four screws holding the power supply to the vertical mounting rails in the front of the cabinet.

CAUTION

The power supply is heavy; make sure there is proper support while removing and replacing it.

10. Check the fuse in the new power supply.

11. Remove the metal brackets at each end of the power supply by removing the four screws at the top and bottom of the power supply.

    One of the metal brackets has the power relay assembly mounted on it. The wires running from the power relay to the power supply must be labeled and disconnected at the power supply.

12. The power supply wiring harness must be labled and removed from the power supply.

13. Install a new power supply by repeating the above steps in reverse order.

G13 BLOWER ASSEMBLY REMOVAL

To remove the blower assembly (figure 6G-15), perform the following:

1. Remove all power from the transport.

2. Swing out the tape unit.

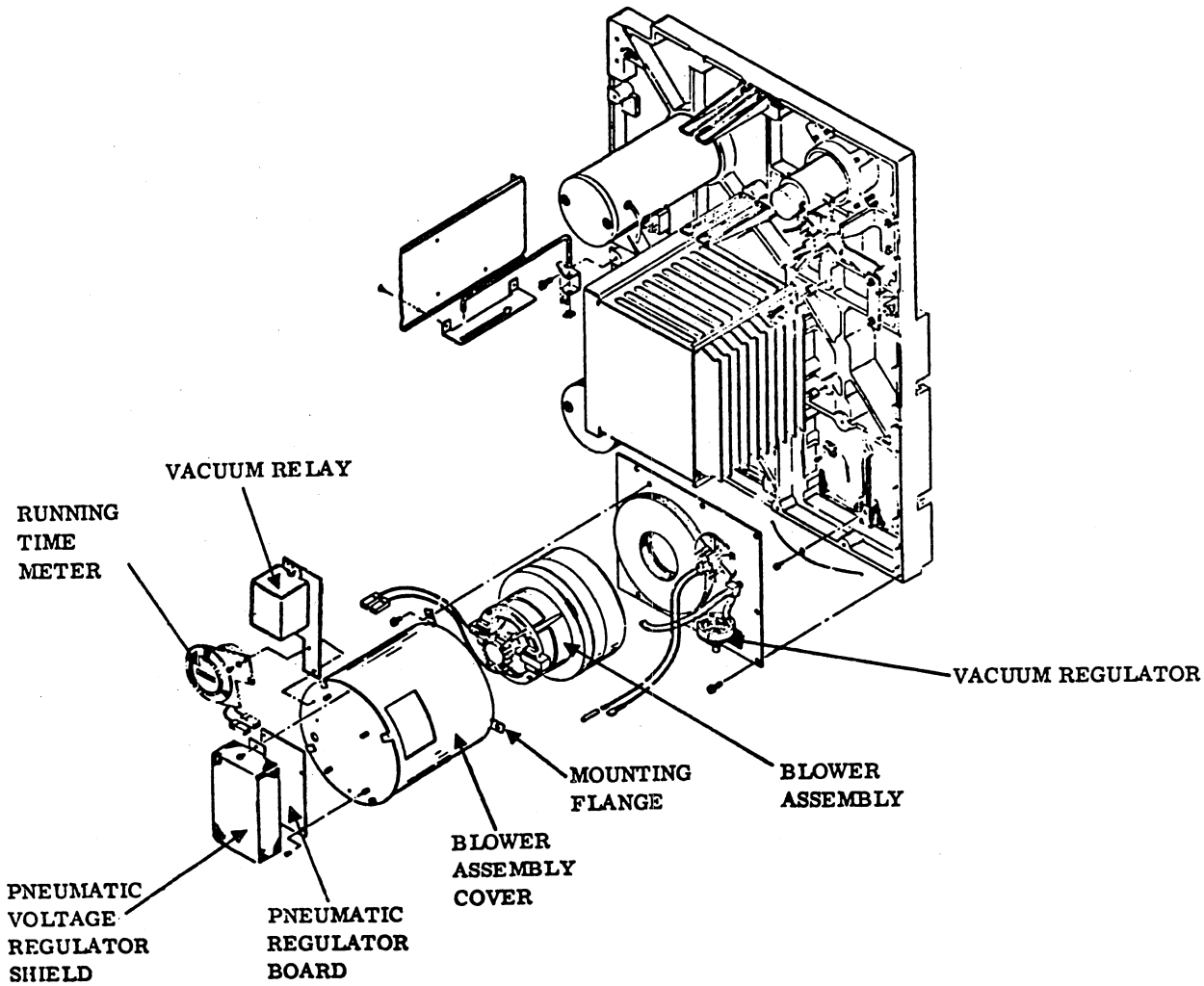

Figure 6G-15. Blower Assembly

3. Remove the pneumatic voltage regulator shield by removing two 4-40 by 0.25-inch screws.

4. On the pneumatic regulator board, remove the two black wires (from the blower assembly) labeled E1 and E2.

5. Remove the third black wire (ground) coming out of the blower assembly at the base of the blower assembly.

6. Remove the pneumatic regulator board by removing the four screws on the board.

7. Remove the running time meter and vacuum relay mounted on the blower assembly by removing the screws.

8. Loosen the three screws at the mounting flange of blower housing.

9. Rotate the blower assembly clockwise until the flanges are clear of the screw heads and remove the assembly.

10. Replace the assemply with a new one, following the removal procedures in reverse order and leaving the pneumatic voltage regulator shield off until after adjustment.

G14 BLOWER ASSEMBLY VACUUM ADJUSTMENT

To adjust the blower assembly vacuum, perform the following:

1. Ensure that all power is removed from the transport. Swing out the tape unit.

2. Disconnect the file protect tube from its filling at the rear of the deck assembly.

3. Attach the vacuum gauge to the deck fitting by using a connector-tube, tee fitting, and tubing, and attach the file protect tube to the tee (figure 6G-16).

NOTE

Verify that the 50/60 Hz jumper is correctly installed on the pneumatic regulator board.

4. Install cap plugs in both the 0.375-inch and 0.250-inch bleed holes of the vacuum plenum. These caps are located near the regulator relay bracket.

5. Turn on the power to the transport, and load the loop columns with tape.

CAUTION

High voltage is present throughout the pneumatic voltage regulator board.

6. Remove the pneumatic voltage regulator shield, and adjust the potentiometer on the pneumatic regulator board, using a small plastic screwdriver to obtain the minimum vacuum indicated by gauge.

7. While monitoring the vacuum gauge, lower the vacuum reading to less than 14.5 inches of water by performing the following:

   a. Remove the 0.250-inch plug. If the vacuum has less than 14.5 inches of water, perform step 8. If the reading is greater than 14.5 inches of water, replace the 0.250-inch plug and perform step 7b below.

   b. Remove the 0.375-inch plug. If the vacuum is less than 14.5 inches of water, perform step 8. If the reading is greater than 14.5 inches of water, remove the 0.250-inch plug and perform step 8.

8. Adjust the potentiometer on the pneumatic voltage regulator board, using a small plastic-handled screwdriver, to obtain a vacuum of 14.5 inches of water as indicated by the gauge.

NOTE

The object of this procedure is to provide a vacuum reading of 14.5 inches of water with the regulator operating in its lower one third adjustment range and running the blower at the minimum speed possible.

9. Remove all power from the transport.

10. Remove the gauge and associated tubing.

11. Reconnect the file protect tube to the deck fitting.

12. Install the pneumatic voltage regulator shield.

G15 UPPER TAPE TACHOMETER (MACHINE REEL) REMOVAL/REPLACEMENT

To remove/replace the upper tachometer (machine reel), perform the following:

1. Ensure that all power is removed from the transport. Open the glass door.

2. Remove the head cover (figure 6G-17) by removing two 6-32 by 0.31 inch screws.

3. Swing the tape unit out, exposing the back of the transport. Remove three 6-32 by 0.63 inch Phillips screws and flat washers holding the filler plate (figure 6G-17).

4. The filler plate is not restricted by the roller guide bracket (figure 6G-17). Remove the bracket by turning the hex nut one quarter turn counterclockwise and pulling the bracket toward the machine reel and out. The filler plate is now free and can be removed.

5. Disconnect the W7P4 connector from the sensor board assembly (figure 6G-17) at the back of the tape unit.

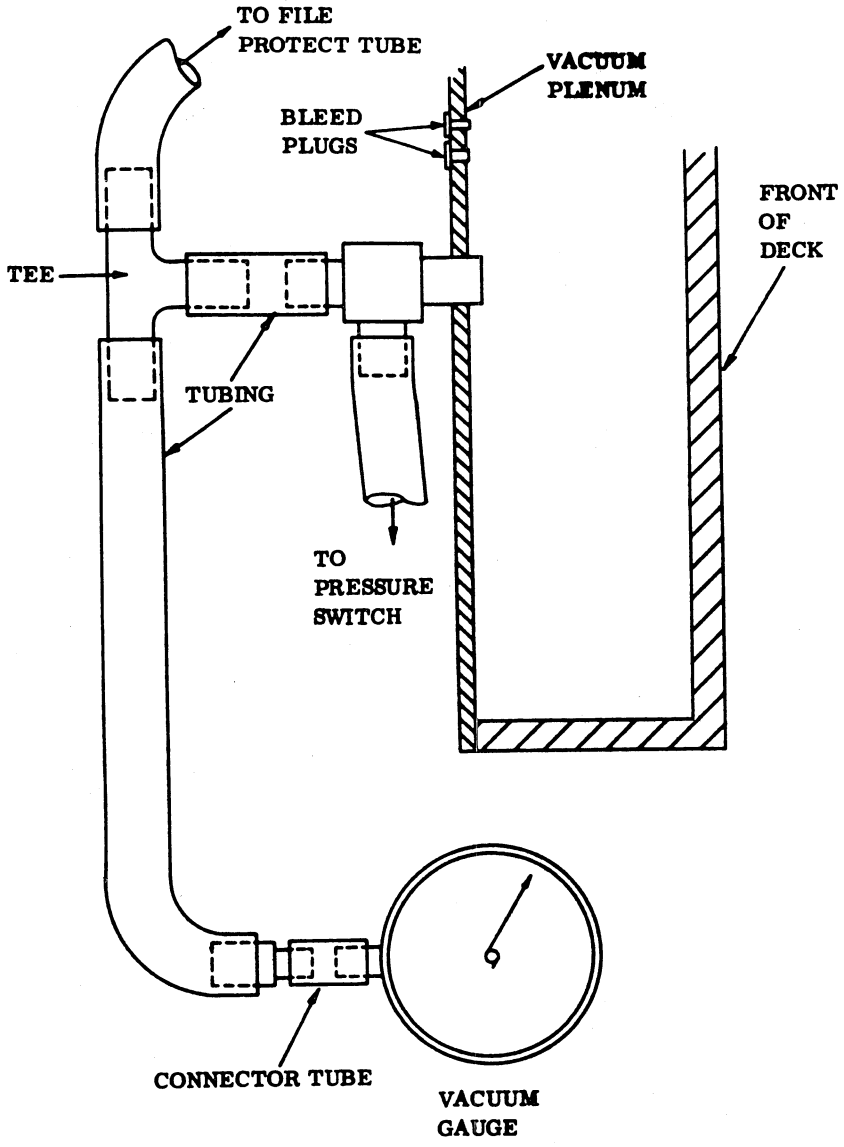

Figure 6G-16. Vacuum Gauge Installation

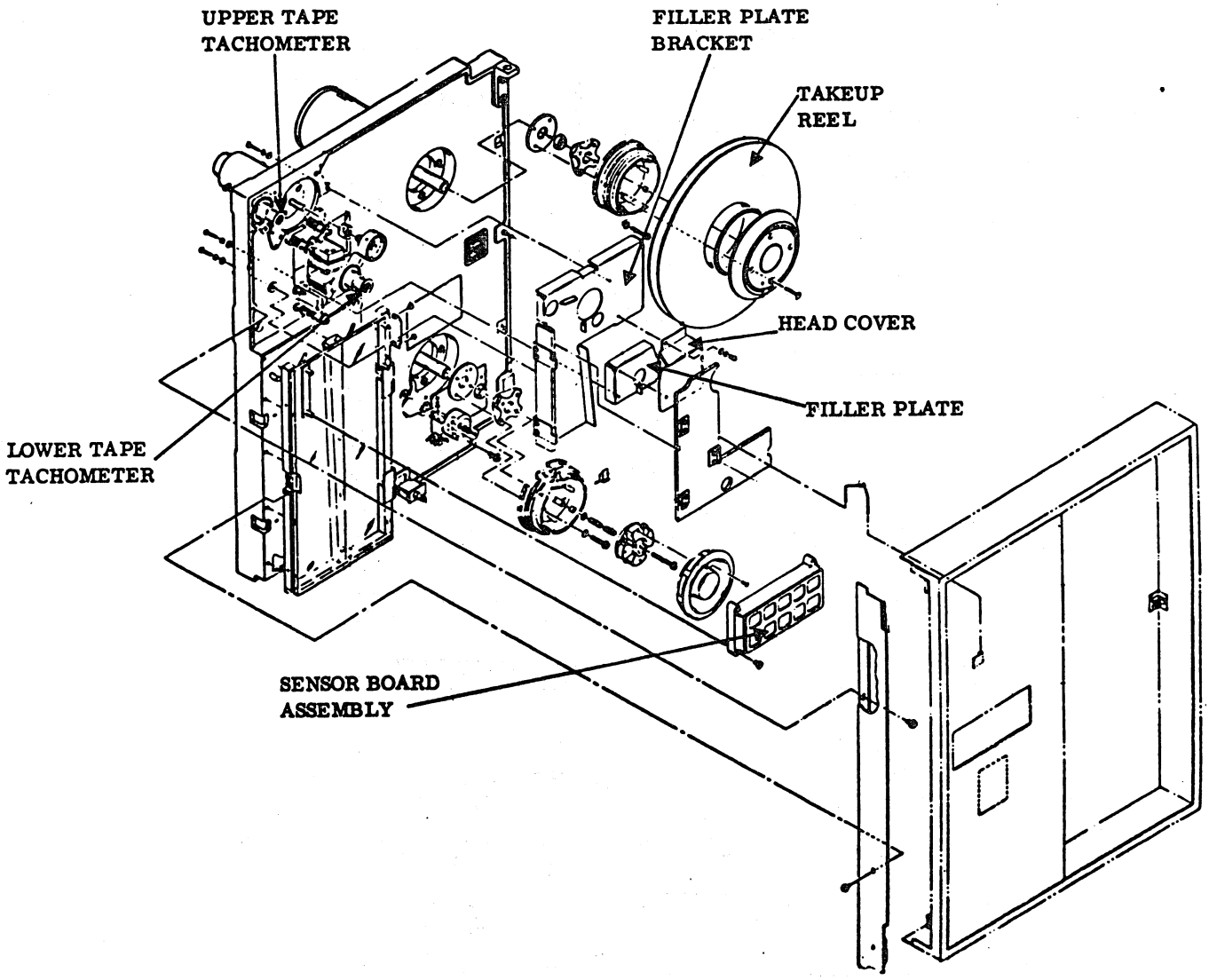

Figure 6G-17. Upper Tape Tachometer

Note the color of the lead to pin 1 for replacement purposes.

6. Carefully remove the board assembly and mounting bracket (figure 6G-17) by removing the hex head screw on the mounting bracket.

NOTE

Step 7 is not necessary unless the tachometer disk is damaged; the sensor can be removed without removing the disk assembly.

7. Remove the 10-32 hex nut (figure 6G-17), lock washer, and flat washer.

8. Install the new reel tape tachometer in the reverse order of this procedure beginning with step 7.

G16 MACHINE REEL TAPE TACHOMETER ALIGNMENT

To align the machine reel tape tachometer (figure 6G-18), perform the following:

1. Align the sensor on the board assembly so that the tachometer passes through the middle of the sensor without rubbing any part of the sensor. The sensor should be at a 90 degree angle to the shaft holding the tachometer.

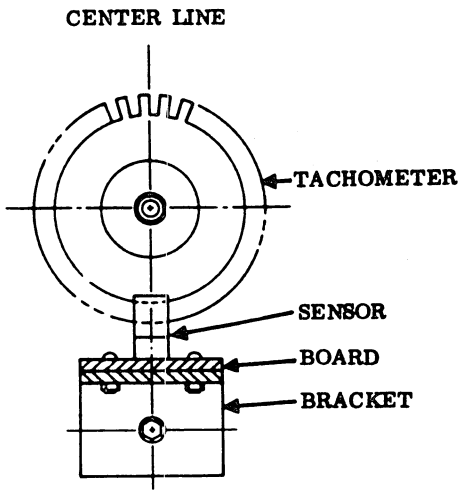

NOTE: THE CENTER LINE OF THE SENSOR SHOULD POINT TO THE CENTER OF THE TACHOMETER.

Figure 6G-18. Machine Reel Tape Sensor Alignment

G17 LOWER TAPE TACHOMETER (FILE REEL) REMOVAL/REPLACEMENT

To remove/replace the lower tape tachometer (file reel), perform the following:

1. Ensure that all power is removed from the transport. Open the glass door.
2. Remove the head cover (figure 6G-19) by removing two 6-32 by 0.31 inch screws.
3. Swing the tape unit out exposing the back of the transport.
4. Remove the filler plate (figure 6G-19):

   There are two Phillips screws holding the filler plate around the file reel tape tachometer; one of these is located directly above the card cage on the back of the transport, and the other screw is located below and to the right of the first one. To remove it all the cards in the card cage must be removed.

   Mark the cards to ensure they are returned to the proper slot. A screwdriver can then be inserted in the hole on the inside of the cage (approximately 1 inch from the inside front of slot 10) to remove the last screw.
5. Disconnect the U8P2 connector from the sensor board assembly (figure 6G-19) at the back of the tape unit. Note the color of the lead to pin 1 for replacement purposes.
6. Carefully remove the sensor board assembly and mounting bracket by removing the hex head screw on the mounting bracket (figure 6G-19).

   NOTE

   Step 7 is not necessary unless the tachometer disk is damaged. The sensor board assembly can be removed without removing the disk assembly.
7. To replace the tachometer disk, remove the hex nut, lock washer, and flat washer located adjacent to sensor board hole on the back of the tape unit.
8. Install the new file reel tape tachometer in the reverse order of this procedure beginning with step 7.

G18 FILE REEL TAPE TACHOMETER ALIGNMENT

To align the file reel tape tachometer (figure 6G-20), perform the following:

1. Align the sensor on the board assembly so that the tachometer passes through the middle of the sensor without rubbing any part of the sensor. The sensor should be at a 90 degree angle to the shaft holding the tachometer.

G19 EOT/BOT SENSOR ASSEMBLY REMOVAL/REPLACEMENT

To remove/replace the end-of-tape/beginning-of-tape sensor assembly (figure 6G-21), perform the following:

1. Ensure that all power is removed from the transport. Swing the tape unit out, exposing the back of the transport.
2. Locate and disconnect the W9P2 connector. Note the color of the twisted pair wires to pin 1 and 2 for replacement purposes.
3. Remove the upper fiber optic lamp source on the back of the transport.
4. Trace the two fiber optic bundles coming from the end-of-tape/beginning-of-tape sensor assembly to the upper light source, and carefully remove them by inserting a small screwdriver in the slot along the side of the fiber optic to the spread socket. Note the position of each bundle as it is removed for replacement purposes.
5. Remove two 6-32 by 0.5 inch Phillips head screws holding the end-of-tape/beginning-of-tape assembly to the deck.
6. Carefully pull the end-of-tape/beginning-of-tape sensor assembly out from the deck.
7. Install the new end-of-tape/beginning-of-tape sensor assembly in the reverse order of this procedure starting with step 6.

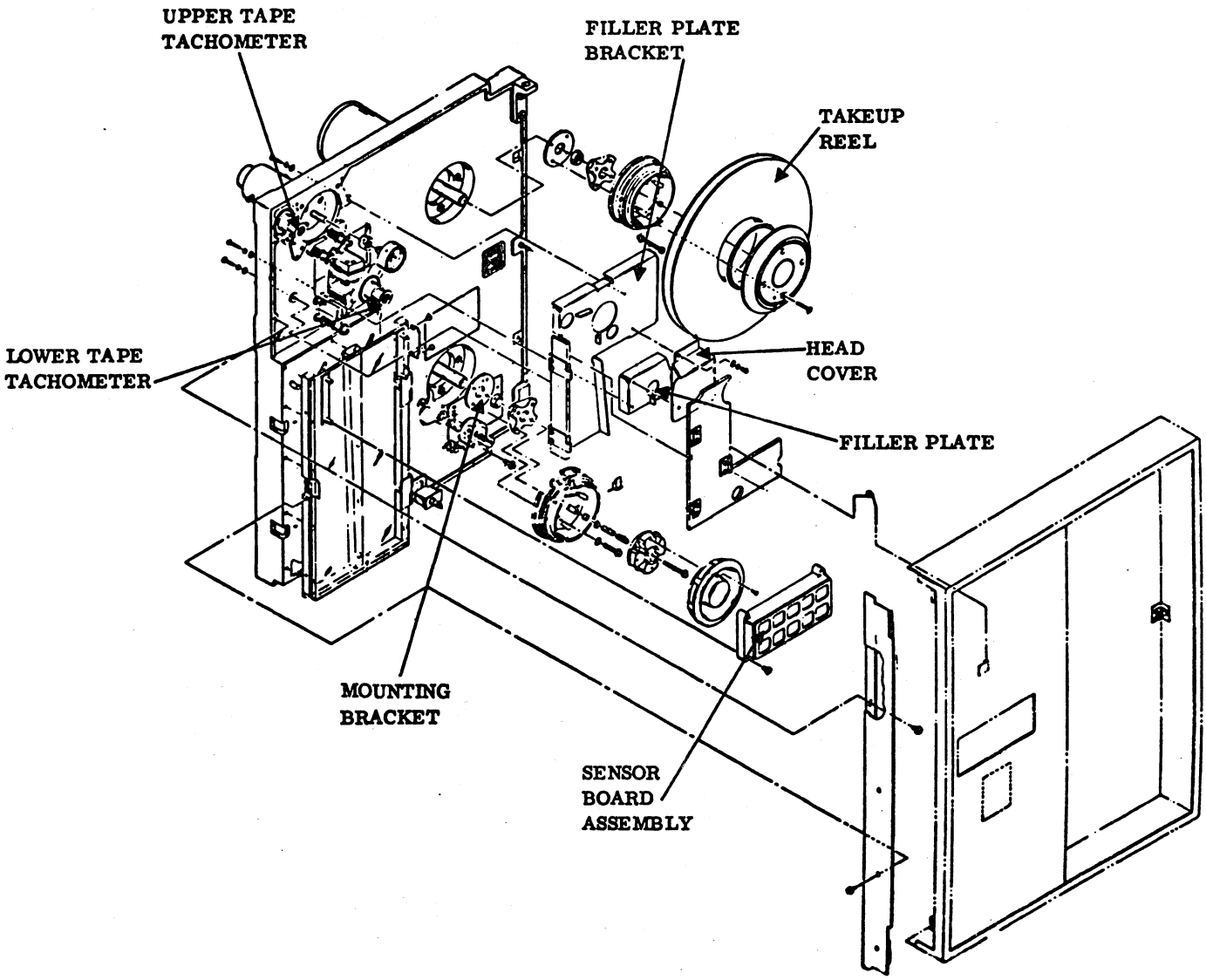

Figure 6G-19. Lower Tape Tachometer

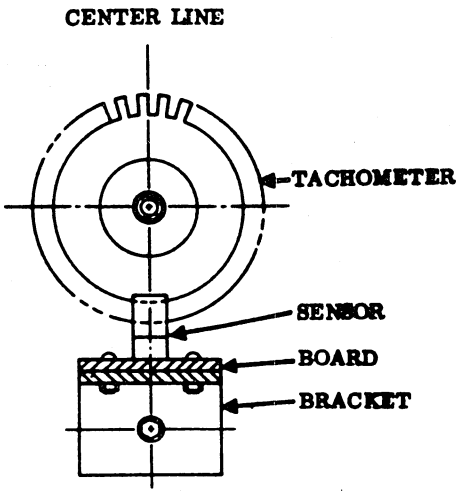

NOTE: THE CENTER LINE OF THE SENSOR SHOULD POINT TO THE CENTER OF THE TACHOMETER.

Figure 6G-20. File Reel Tape Sensor Alignment

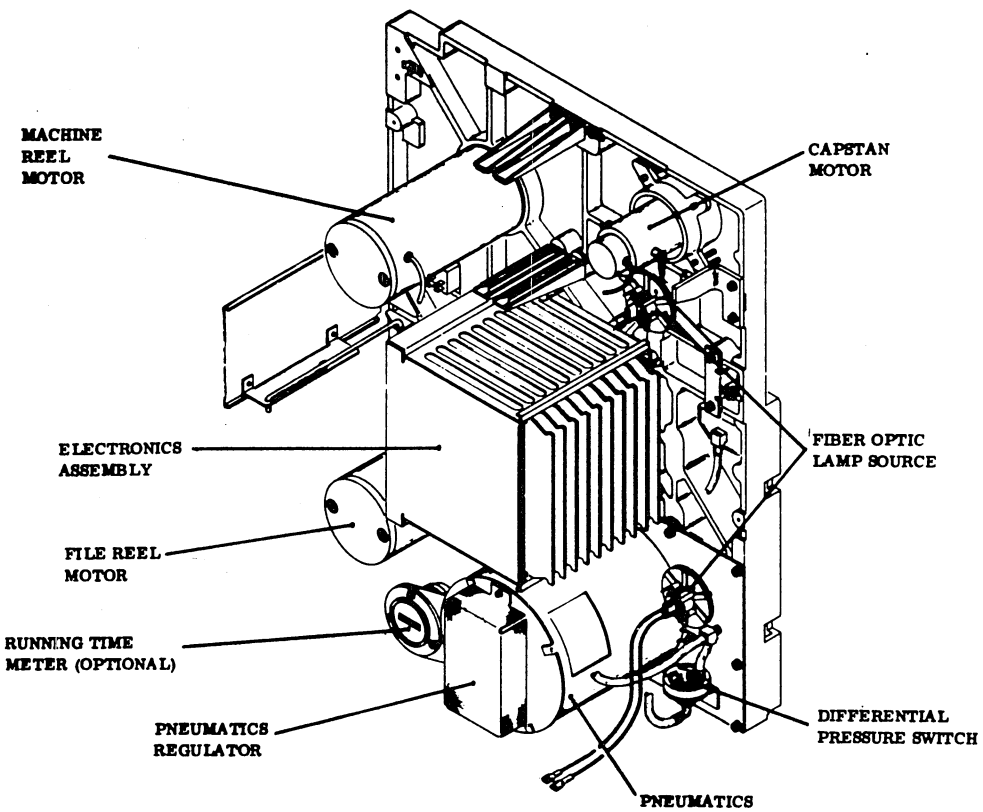

Figure 6G-21. End-of-Tape/Beginning-of-Tape Sensor Assembly

G20 EOT/BOT ASSEMBLY ALIGNMENT

To align the end of tape/beginning of tape (figure 6G-22), perform the following:

1. When the two 6-32 by 0.5 inch Phillips head screws are replaced and snuggly tightened to the chassis according to procedure G19, the endoftape/beginningoftape sensor assembly is properly aligned.

G21 FIBER OPTIC LIGHT BULB REMOVAL

To remove the fiber optic light bulb (figure 6G-23), perform the following:

1. Ensure that all power is removed from the transport. Swing the unit out, exposing the back of the transport.

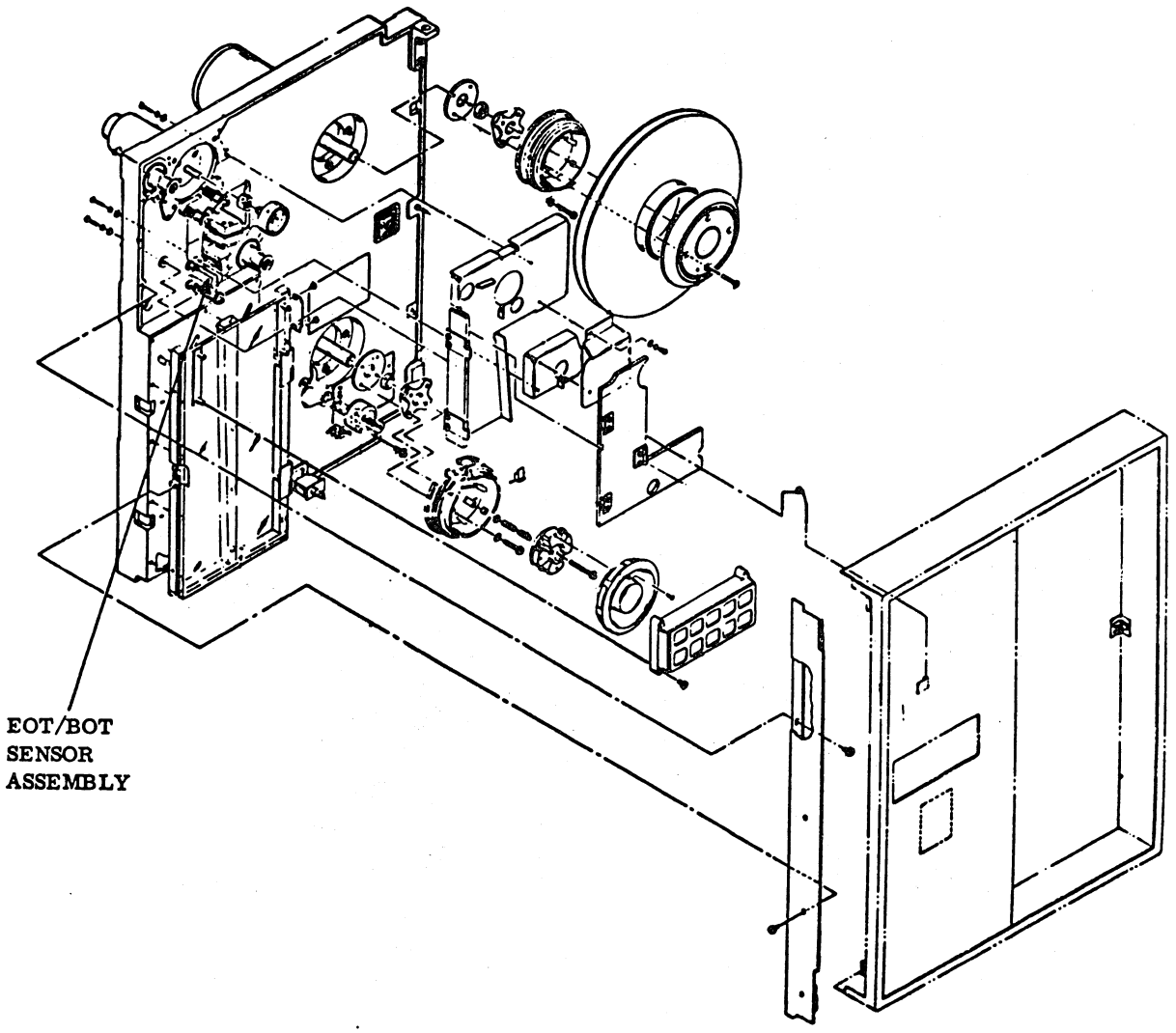

Figure 6G-22. End-of-Tape/Beginning-of-Tape Assembly

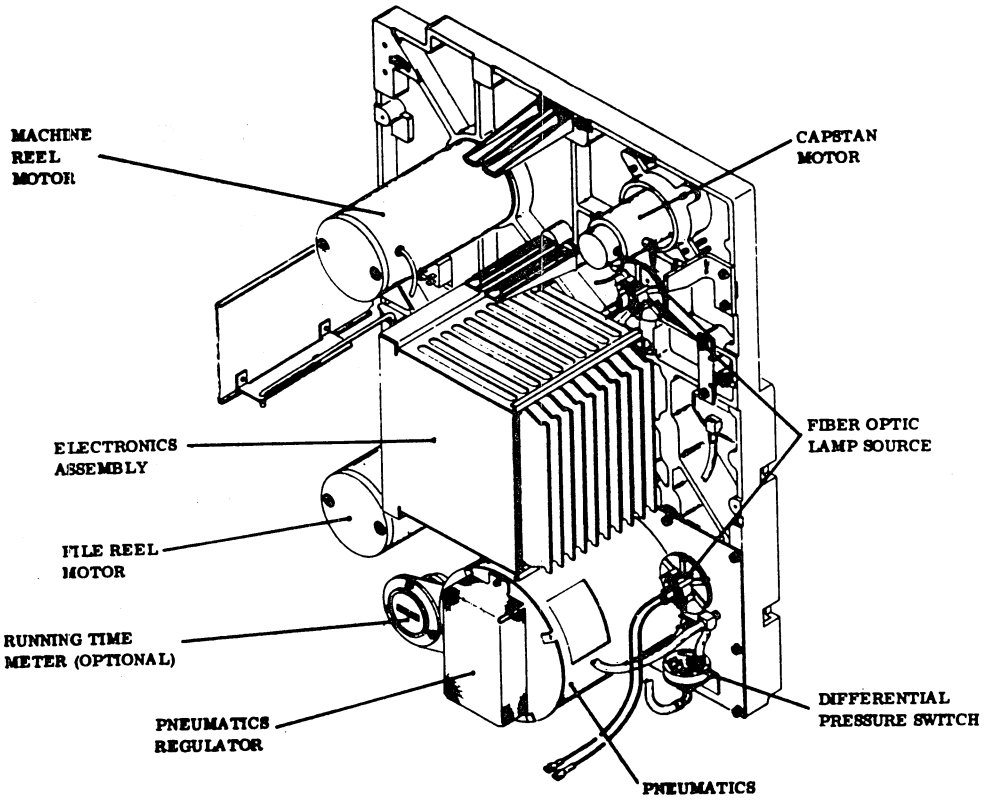

Figure 6G-23. Fiber Optic Light Bulb

2. Hold the light source firmly, and remove the lamp socket by turning counterclockwise approximately 45 degrees.

3. Pull the bulb (type 192) straight out from the socket, and replace it with a new one.

NOTE

Due to the location of the filament in the bulb, it may be necessary to turn the bulb around 180 degrees in the socket to achieve the brightest amount of light through the fiber optic bundles.

G22 OPERATORS PANEL LIGHT BULB REMOVAL/REPLACEMENT

To remove the operators panel light bulb (figure 6G-24), perform the following:

1. Remove the two screws holding the bezel to the housing

2. Lift the bezel from the housing, and allow it to hang on the wires. It is not necessary to disconnect the wires.

3. Remove the diffuser by pulling it straight out of the housing.

4. Reach into the assembly with fingers and extract the snap-in bulb (type 336) from the holder.

To replace the operators panel light bulb, perform the above in reverse order.

G23 FILE PROTECT SENSOR ASSEMBLY REMOVAL/REPLACEMENT

1. To remove the file protect sensor assembly (figure 6G-25), perform the following:

   a. Ensure that all power is removed from the transport.

   b. Remove the file reel hub assembly according to procedure G24.

   c. Remove the plastic tubing from the rear of the sensor assembly.

   d. Remove the two 10-32 by 0.5 inch screws holding the sensor assembly to the deck.

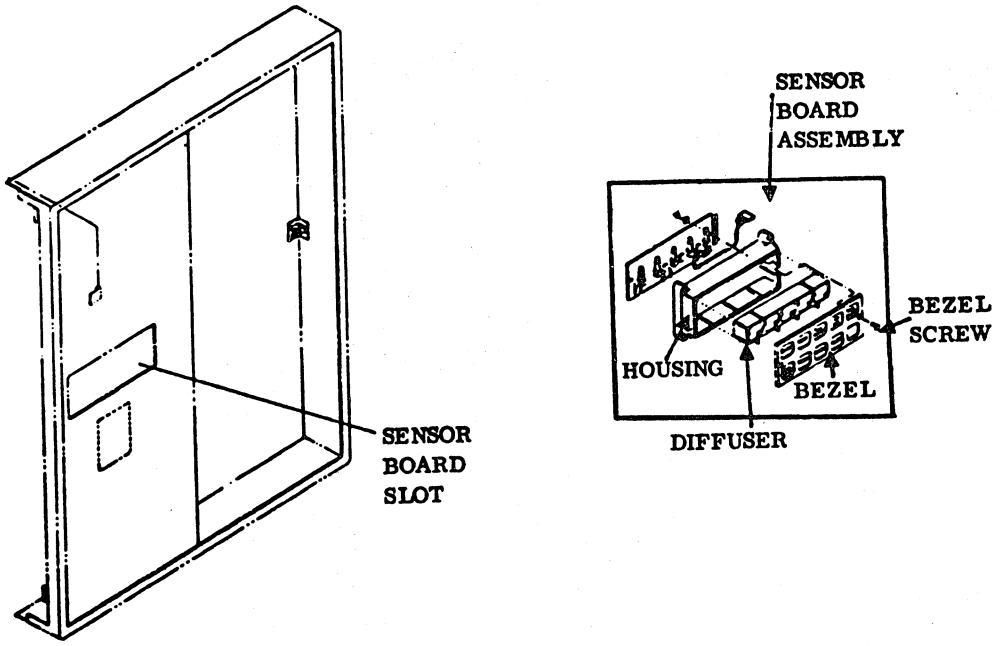

Figure 6G-24. Magnetic Tape Transport Operator Panel Indicators

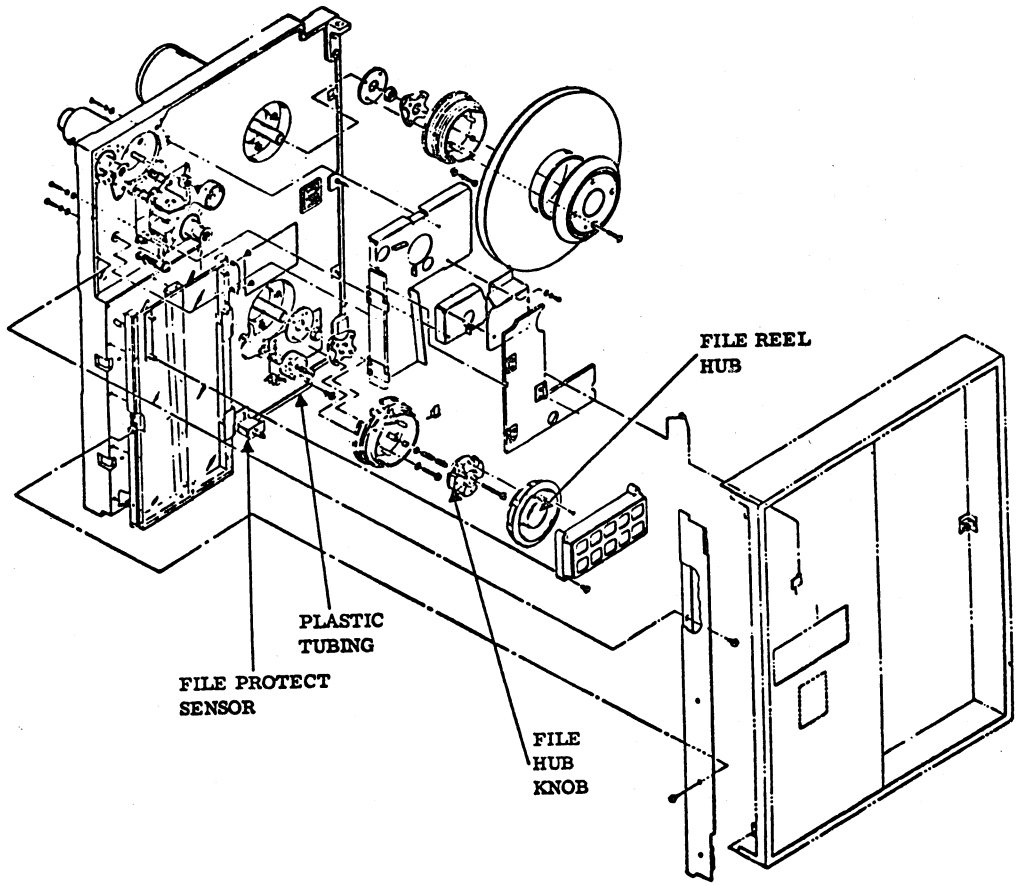

Figure 6G-25. File Protect Sensor Assembly and File Hub

e. Partially remove the sensor assembly from the deck. Disconnect (unsolder if necessary) the two wires from the switch. Note the wire color and connection for reassembly purposes.

2. To replace the file protect sensor assembly, perform the following:

   a. Before installing the sensor assembly, ensure that the shoulder of the activator rod causes the switch to actuate.

   b. Perform steps b through d above in reverse order.

   c. Mount the file reel hub. Ensure that the tape tracks without rubbing the reel sides.

   d. Install the tape reel without the write enable ring, and ensure that the activator rod does not touch the reel when the reel is rotated through 360 degrees.

   e. Install a scratch tape-loaded reel with a write enable ring installed on the file reel hub.

   f. Perform a load operation, and ensure that the vacuum pulls the activator rod sufficiently to prevent the rod from touching the ring.

   g. Unload the transport.

G24 FILE/HUB REMOVAL/REPLACEMENT

To remove/replace the file/hub (figure 6G-25), perform the following:

1. Ensure that all power is removed from the transport. Swing the front glass door of the transport open.

2. Remove the four Phillips head screws from the front of the hub assembly, and carefully remove the front of the hub.

3. Remove the two white tabs from the inside of the hub, carefully noting the direction that they are inserted.

4. Carefully push in on the file hub knob, and remove the four brown tabs that hold the file hub knob in position. Note the position of each tab as it fits in the assembly.

5. Remove the two flat head screws from the front of the file hub knob, being careful not to drop the spring, sleeve, or washer. Remove the file hub knob.

6. Remove the reel hub by removing the two flat head screws and washers.

7. To replace the file/hub, perform the removal procedure in reverse order.

G25 CONTROLLER PRINTED CIRCUIT BOARD REPLACEMENT

To replace the magnetic tape transport controller printed circuit board (part number 88918500), perform the following:

1. Unload all magnetic tape transports.

2. Remove the processor front cover.

3. The magnetic tape transport controller board is located in a slot AB of the processor logic board chassis. Using the board puller, carefully pull out the original controller board. Identify it with a defective parts tag showing the controller and processor serial numbers, the cause of removal (diagnostic action code), and running time meter information of the magnetic tape transport with the highest running time.

4. Visually verify that the space board is identical to the one that was removed and has the correct part number.

5. Insert the space controller board into the slot AB rails (component side to the left). Make sure the outside board edge is flush with the other boards.

6. Replace the processor cover.

7. Load the magnetic tape transport tapes as required.

8. Return to the DDLT that prompted this action.

G26 OPERATORS PANEL REMOVAL/ REPLACEMENT

1. To remove the operators panel, perform the following:

   a. Power down the transport.

   b. Remove the four screws holding the panel base to the transport.

   c. Disconnect the cable harness connector from the panel.

2. To replace a new operators panel, perform the following:

   a. Refer to procedure G23 to ensure that the lamps have been installed in the new operators panel. If the lamps have not been installed, use new lamps or the lamps from the previously dismounted panel.

   b. Install the new operators panel in reverse order, beginning with step c.

G27 POWER DISTRIBUTION BOX COMPONENTS CHECK

Checking components of the power distribution box requires the use of a vom and the following procedure (figure 6G-26):

1. Open the rear door to the magnetic tape cabinet.
2. Take out the six mounting screws and remove the power distribution box cover.
3. With the vom set to read 300 V ac, check the input voltage on terminals 1 and 2 of TB01. The voltage should be 120 V ac ±10%.
4. With the vom set to read 300 V ac, check the voltage on the output terminals of the line filter. The voltage is approxiamtely 0.8% less than step 3 when fully loaded.
5. With ac power off, measure the voltage across T1 and T2 of the triac.
   a. If the meter reads 120 V ac, the triac and ac sequencer printed circuit board are all right.
   b. If the meter reads 0 V ac, the triac is shorted and must be replaced.
   c. If the meter reads 70 V ac to 100 V ac, the ac sequencer printed circuit board is bad and must be replaced.
6. With ac power on, measure the voltage across T1 and T2 of the triac.
   a. If the meter reads 120 V ac, the triac is faulty and must be replaced.
   b. If the meter reads 0 V ac, the triac and ac sequencer printed circuit board are all right.
   c. If the meter reads 70 V ac to 100 V ac, the ac sequencer printed circuit board is bad and must be replaced.
7. Remove the meter leads and replace the cover on the power distribution box.
8. Close the cabinet door and continue the testing sequence.

G28 TRIAC POWER SWITCH REPLACEMENT

To replace the triac (figure 6G-26), perform the following:

1. Turn off all power to the magnetic tape cabinet, and disconnect the power cord from the primary power source.
2. Open the rear door of the magnetic tape cabinet.
3. Take out six mounting screws and remove the power distribution box cover.
4. Refer to figure 6G-26 and locate the triac.
5. Identify and remove the three wires from the power sequencer printed circuit board.
6. Using an open-end wrench, carefully turn the triac counterclockwise to remove it from the heat sink.
7. Install the new triac in the heat sink and reconnect the triac wires to the power sequencer printed circuit board.
8. Reinstall the power distribution box cover, close the cabinet door, and reconnect the power cord to the primary power source.
9. Continue the DDLT testing sequence.

G29 AC LINE FILTER REPLACEMENT

To replace an ac line filter (figure 6G-26), perform the following:

1. Turn off all power to the magnetic tape cabinet, and disconnect the power cord from the primary power source.
2. Open the rear door to the magnetic tape cabinet.
3. Take out the six mounting screws and remove the power distribution box cover.
4. Refer to figure 6G-26 and locate the line filter.
5. Identify and remove the wires from the line filter.
6. Take out the four mounting screws and remove the line filter from the power distribution box.
7. Install the new line filter with the same orientation as before, and reconnect wires.
8. Reinstall the power distribution box cover, close the cabinet door, and reconnect the power cord to the primary power source.
9. Continue the DDLT testing sequence.

G30 AC POWER SEQUENCER REPLACEMENT

To replace an ac power sequencer (figure 6G-26), perform the following:

1. Turn off all power to the magnetic tape cabinet, disconnect the power cord from the primary power source.
2. Open the rear door of the magnetic tape cabinet.
3. Take out the six mounting screws and remove the power distribution box cover.

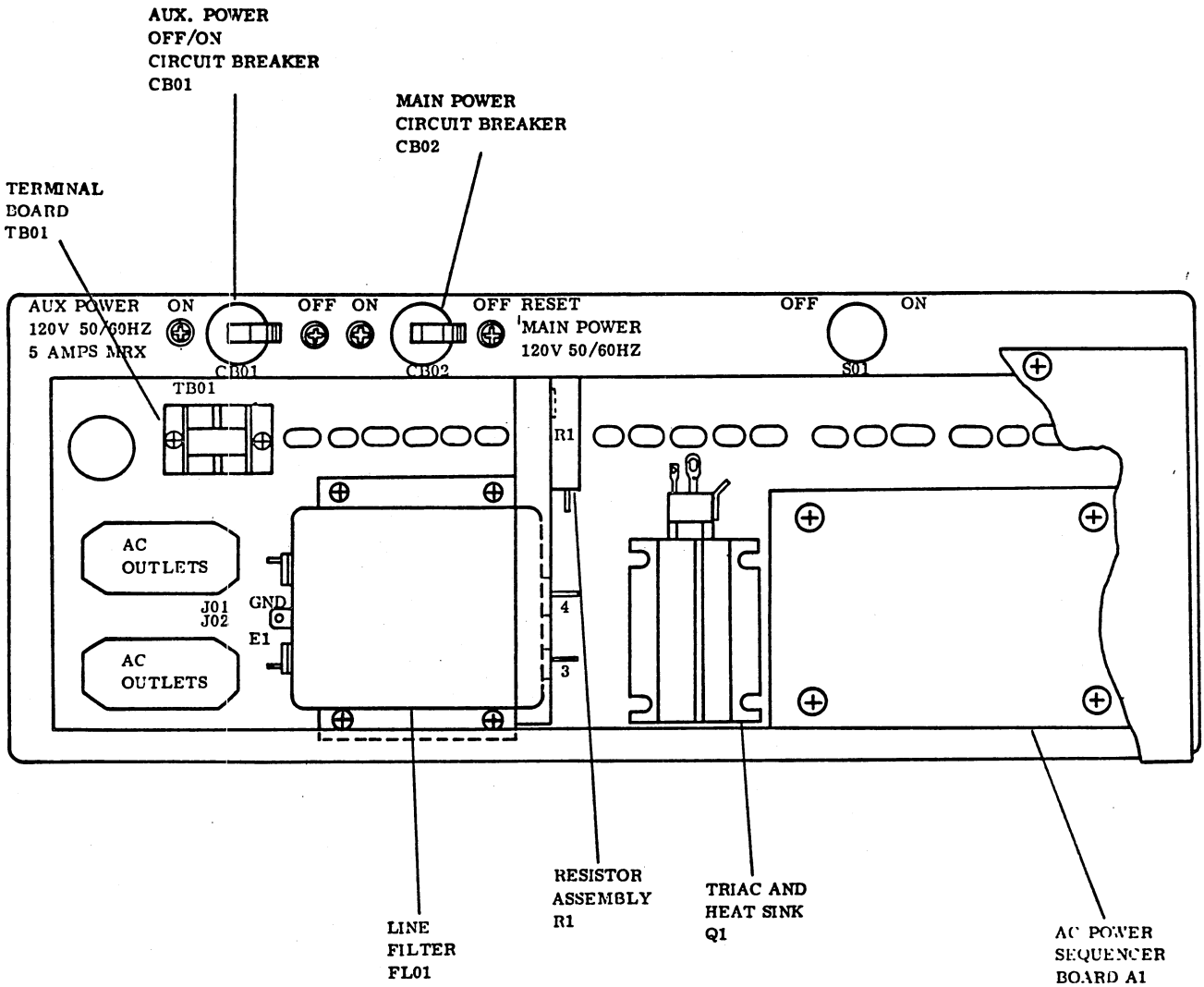

Figure 6G-26. Power Distribution Box Assembly

4. Refer to figure 6G-26 and locate the power sequencer printed circuit board.

5. Identify and remove the wires from the power sequencer printed circuit board.

6. Take out the four mounting screws and remove the printed circuit board from the power distribution box.

7. Install the new printed circuit board with the same orientation as before, and reconnect the wires.

8. Reinstall the power distribution box cover, close the cabinet door, and reconnect the power cord to the primary power source.

9. Continue the DDLT testing sequence.

G31 POWER DISTRIBUTION BOX CIRCUIT BREAKER CHECK/REPLACEMENT

To check and/or replace the circuit breaker in the power distribution box (figure 6G-26), perform the following:

1. Turn off all power to the magnetic tape cabinet and disconnect the power cord from the primary source.

2. Open the rear door on the magnetic tape cabinet.

3. Take out the six mounting screws and remove the power distribution box cover.

4. Refer to figure 6G-26 and locate the circuit breaker.

5. Identify and remove the wires from the circuit breaker.

6. With an ohmmeter, check for continuity across the circuit breaker terminals. If no continuity is present, set the circuit breaker to off, then on, and check again. If there is still no continuity, replace the circuit breaker.

7. Remove the circuit breaker by removing the two mounting screws on the outside of the power distribution box and pulling it out from inside of the power distribution box.

8. Install the new circuit breaker with the same orientation as before and replace the mounting screws.

9. Reinstall the power distribution box cover and close the cabinet door.

10. Reconnect the power cord to the primary source and continue the DDLT testing sequence.

G32 POWER DISTRIBUTION BOX SWITCH CHECK/REPLACEMENT

To check and/or replace a switch in a power distribution box (figure 6G-26) use an ohmmeter and perform the following:

1. Turn off all power to the magnetic tape cabinet, and disconnect the power cord from the primary source.

2. Open the rear door of the magnetic tape cabinet.

3. Take out six mounting screws and remove the power distribution box cover.

4. Refer to figure 6G-26 and locate the switch.

5. Identify and remove the wires from the switch.

6. With an ohmmeter, check for continuity across the switch terminals with the switch on and then off. If no change is noted on the ohmmeter, replace the switch:

   a. Remove the switch by releasing the mounting nut on the collar of the switch and pulling the switch out from the inside of the power distribution box.

   b. Install the new switch with the same orientation as before; then replace the mounting nut and reconnect the wires.

7. Reinstall the power distribution box cover, close the cabinet door, and reconnect the power cord to primary source.

8. Continue the DDLT testing sequence.

G33 RESISTOR ASSEMBLY REPLACEMENT

To replace the resistor assembly (2K Ω , 50 watts), perform the following:

1. Turn off all power to the magnetic tape cabinet and disconnect the power cord from the primary source.

2. Open the rear door of the magnetic tape cabinet.

3. Remove the six power distribution box cover holddown screws.

4. Refer to figure 6G-26 and locate the resistor assembly (2K Ω , 50 W).

5. Identify and remove the two wires from the ac power sequencer board.

6. Remove the two resistor mounting screws

7. Install the new resistor assembly maintaining the same orientation and reconnect the wires.

8. Reinstall the power distribution box cover, close the cabinet door, and reconnect the power cord to the primary power source.

9. Continue the DDLT testing sequence.

TAPE CASSETTE TRANSPORT PROCEDURES 6H

CONTENTS

Procedure		Page
H1	Cassette Cartridge Loading	6H-1
H2	Cassette Cartridge Unloading	6H-1
H3	Tape Cassette Transport Lubrication	6H-1
H4	Tape Cassette Transport Cleaning	6H-1
H5	Tape Wrap Removal	6H-3
H6	Tape Cassette Controller Replacement	6H-3
H7	Tape Cassette Transport Replacement	6H-4
H8	Cassette Power Supply Voltages Check	6H-4
H9	Tape Cassette Power Supply Replacement	6H-4

Figure		Page
6H-1	Tape Cassette Tape Cartridge	6H-1
6H-2	Tape Cassette Transport	6H-1
6H-3	Tape Cassette Transport Lubrication Points	6H-2
6H-4	Tape Cassette Transport Cleaning Points	6H-2
6H-5	Tape Cassette Transport Controller Switches	6H-3
6H-6	Tape Cassette Transport Mounting Detail	6H-4
6H-7	Tape Cassette Power Supply Voltage Test Points	6H-5

H1 CASSETTE CARTRIDGE LOADING

To unload the tape cassette cartridge, perform the following:

1. Raise the lid of the tape transport.
2. If a cartridge is already loaded in the transport, remove it (using instructions in procedure H2).
3. Observe the cartridge to be loaded. For recording, the write enable tabs (figure 6H-1) must be installed. For reading tape only, these tabs should be removed.
4. Refer to figure 6H-1 and insert the back edge of the cassette cartridge into the transport and press the front edge down until it snaps in place. The exposed side of the cartridge (A or B) is the active side of the tape; therefore the cartridge must be installed with the desired side up.
5. Close the lid to engage the interlock that enables operation of the transport.

H2 CASSETTE CARTRIDGE UNLOADING

To unload the tape cassette cartridge (figure 6H-2), perform the following:

1. Raise the lid of the tape transport.
2. Press the tape eject button to release the cassette cartridge (figure 6H-2).
3. Remove the cassette cartridge from the transport and place it in its designated storage area. Be careful not to drop the tape, contaminate it, or expose it to a magnetic field. (It is usually a good practice to rewind the tape before it is removed from the transport.)
4. Close the lid on the tape transport.

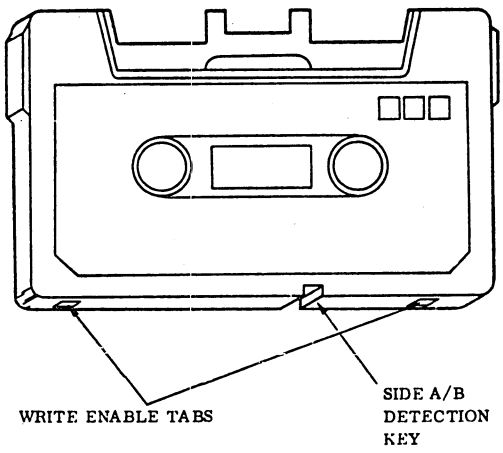

Figure 6H-1. Tape Cassette Tape Cartridge

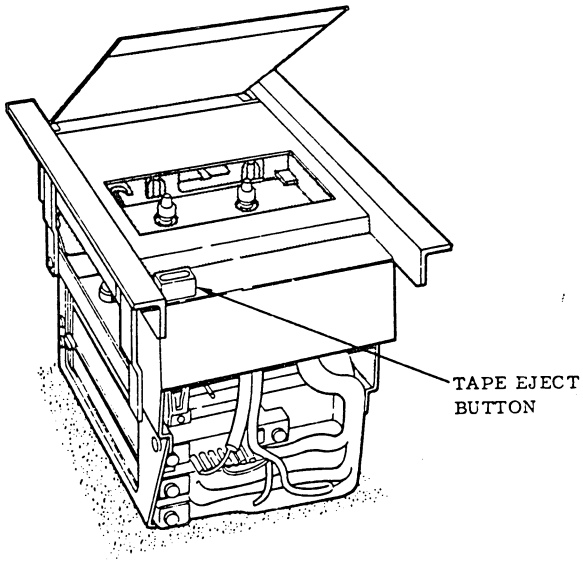

Figure 6H-2. Tape Cassette Transport

H3 TAPE CASSETTE TRANSPORT LUBRICATION

To lubricate the tape transport (figure 6H-3), perform the following:

1. Apply one drop of NCR 803M or an equivalent type of lubricant to each of the points listed below (a syring or a lubristyle pen oiler should be used for this purpose):

   Capstan thrust bearings under each flywheel

   Each end of each head guide shaft. After applying the lubricant, move the slide base assembly back and forth several times.

   Each joint of the two pinch roller solenoid connecting rods

   Each bushing near the pinch roller on the connecting rod. Actuate the pinch roller solenoid several times after applying lubricant.

   Brake arm pivot points. Actuate the brakes several times after applying the lubricant.

   On the end of the eject button post at the point of contact between the end of the post and the eject arm assembly

H4 TAPE CASSETTE TRANSPORT CLEANING

To clean the tape cassette transport (figure 6H-4), perform the following:

1. Apply isoprophyl alcohol to a cotton swab.
2. While rotating the pinch roller, rub the cotton swab up and down on the pinch roller. As the swab becomes

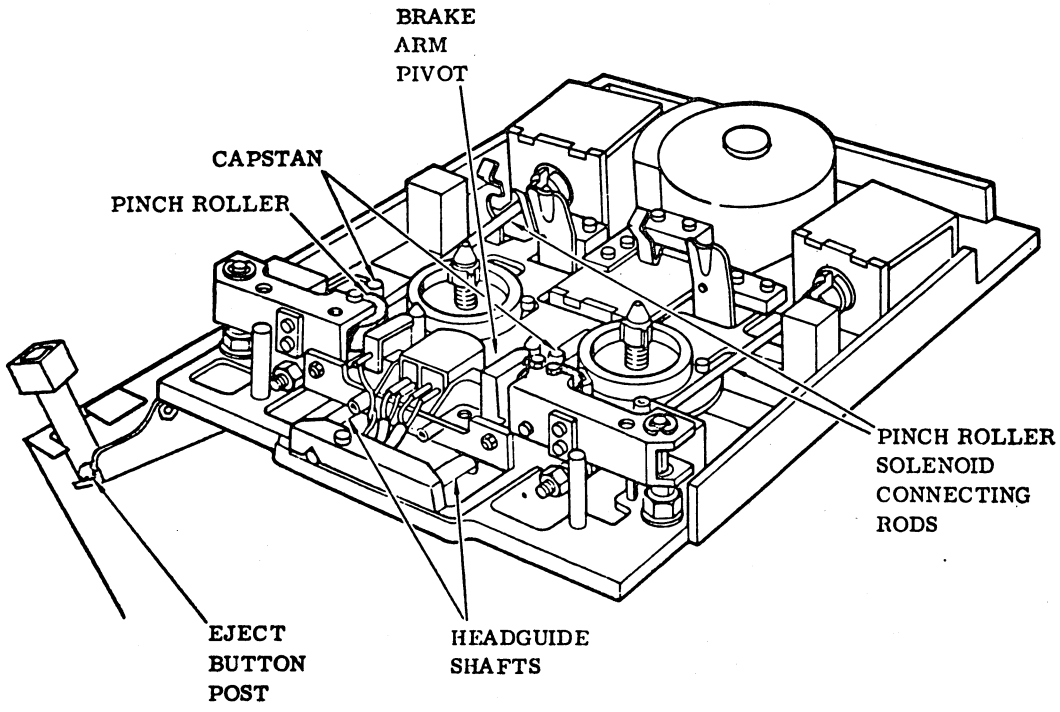

Figure 6H-3. Tape Cassette Transport Lubrication Points

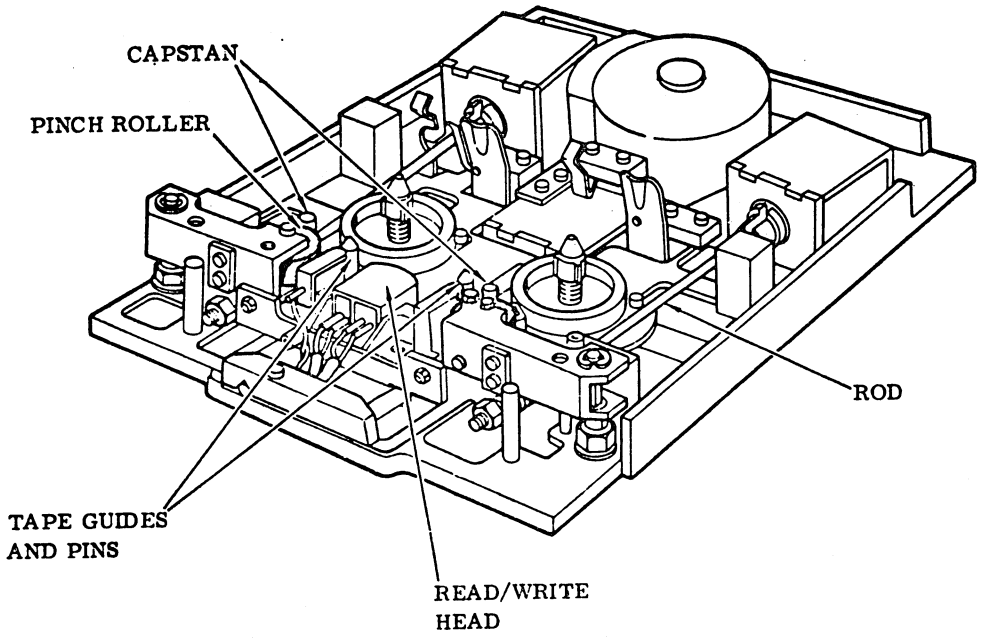

Figure 6H-4. Tape Cassette Transport Cleaning Points

dirty with oxides, discard and use a fresh one until the swab remains clean after rubbing the pinch roller.

3. Clean the two capstans using the same procedure described for the pinch rollers.

4. Clean the head, tape guides, and guide pins using the same procedure described for the pinch rollers.

5. With a dry swab, wipe the head, tape guides, and all areas cleaned to remove any remaining alcohol.

NOTE

Remove any lint that might have remained in the transport from a cotton swab.

H5 TAPE WRAP REMOVAL

If the tape becomes wrapped around the pinch roller, the following procedure is recommended to free it:

1. Turn off power to the tape cassette transport.

2. Press the tape eject button.

3. Carefully remove the cassette.

4. Using your fingers, pull the tape from the pinch roller, taking care not to damage the transport mechanism.

5. If the tape has not been broken, it can be rewound by using a pen or other non-magnetic instrument. In most cases the data is salvageable up to the point where the damage occurred. Discard the tape after reading data from the salvageable area.

6. Install a cassette (blank if possible) that is known to be good.

7. If the second tape cassette also wraps, replace the tape transport and return it for repair.

H6 TAPE CASSETTE CONTROLLER REPLACEMENT

To replace the tape cassette controller, perform the following:

1. Remove the tape cassette from the transport if present.

2. Remove the right side panel from the cabinet.

3. Remove the cover plate from the processor chassis by releasing the two captive fasteners at the bottom of the panel.

4. Use the extractor tool attached to the inside of the panel and remove the controller from the processor chassis. Refer to table 4A-3, volume 1, for locations.

5. Verify that the equipment code and function code switches are set to their normal operating positions on the new controller. Refer to figure 6H-5 for switch locations and figure 4H-2, volume 1, for switch settings.

6. Position the new controller in its assigned position within the processor chassis with the component side facing left.

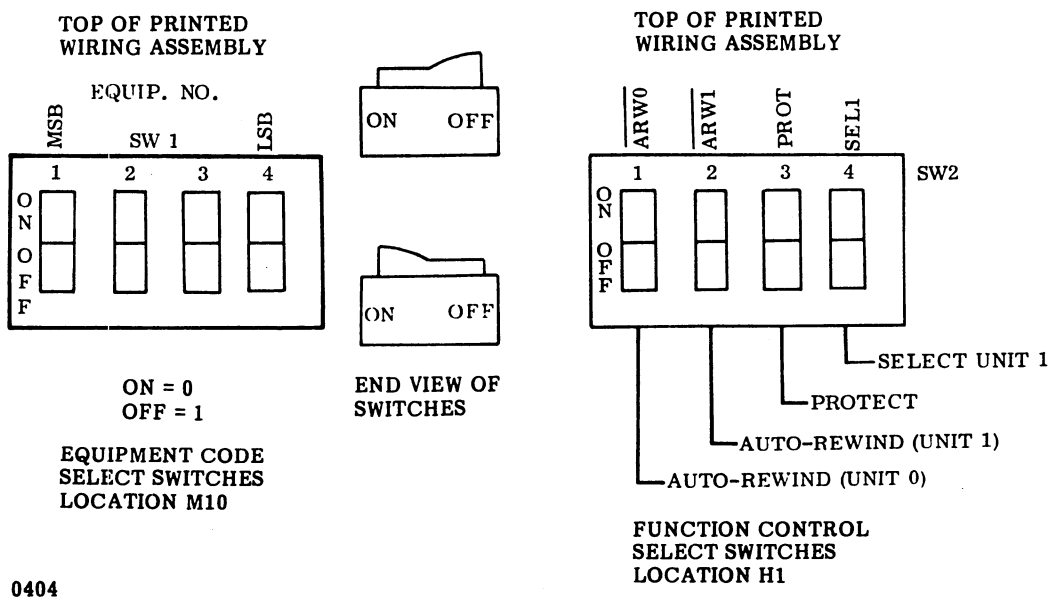

Figure 6H-5. Tape Cassette Transport Controller Switches

7. Seat the controller into its backplane connector by applying firm pressure at the top and bottom of the controller.

8. Replace the extractor, cover plate, and the cabinet side panel.

H7 TAPE CASSETTE TRANSPORT REPLACEMENT

To replace the tape cassette transport (figure 6H-6), perform the following:

1. Remove the tape cassette from the transport, if present.

2. Remove the front panel of the cabinet.

3. Turn off the POWER ON/OFF switch on the cabinet if possible.

4. Release the latches and pull the equipment mounting frame forward.

5. Disconnect the cable at J4.

6. Remove the two mounting screws on the side of tape transport. At the rear of the transport, remove the two screws from the mounting plate between transport units 0 and 1.

7. Lift the transport out from the front of the mounting frame.

8. Insert the new transport in the space vacated by the faulty transport, and install the mounting screws.

9. Reconnect the cable to J4.

10. Close and secure the equipment mounting frame.

11. Restore the front panel to the cabinet.

12. Turn the POWER ON/OFF switch to ON at the cabinet

13. Continue the DDLT testing sequence.

H8 CASSETTE POWER SUPPLY VOLTAGES CHECK

To check the cassette voltages (figure 6H-7), perform the following:

1. Remove the front panel from the cabinet.

2. Release the latches and pull the equipment mounting frame forward to expose the cable on the back of the tape cassette transport.

3. Remove the five mounting screws from the base of the cover and remove the cover from the power supplies.

4. Follow the cable to the center power supply mounted below and to the rear of the tape cassette transport.

5. With a Vom set to read 12 V dc, check the voltage at the +12 V dc test points. (See figure 6H-7.)

6. If voltage is not 12 V dc ±5%, adjust the potentiometer clockwise to increase voltage or counterclockwise to decrease voltage.

7. If the voltage cannot be adjusted, replace the power supply (procedure H9).

8. Close and secure the equipment mounting frame.

9. Restore the front panel to the cabinet.

10. Continue the DDLT testing sequence.

H9 TAPE CASSETTE POWER SUPPLY REPLACEMENT

To replace the tape cassette power supply, perform the following:

1. Turn the system power off and disconnect the power cord from the primary power source

2. Remove the front panel from the cabinet.

3. Remove five mounting screws from the base of the cover and remove the cover from the power supplies.

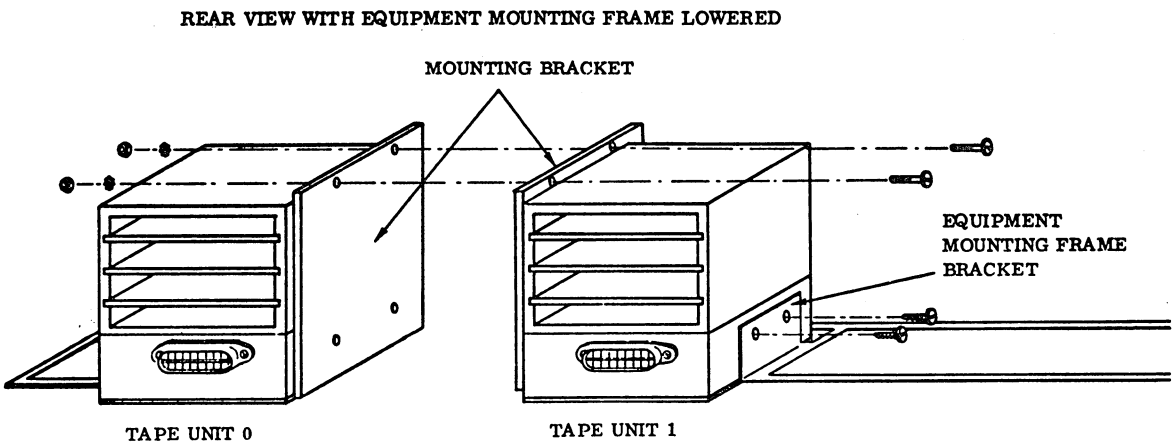

Figure 6H-6. Tape Cassette Transport Mounting Detail

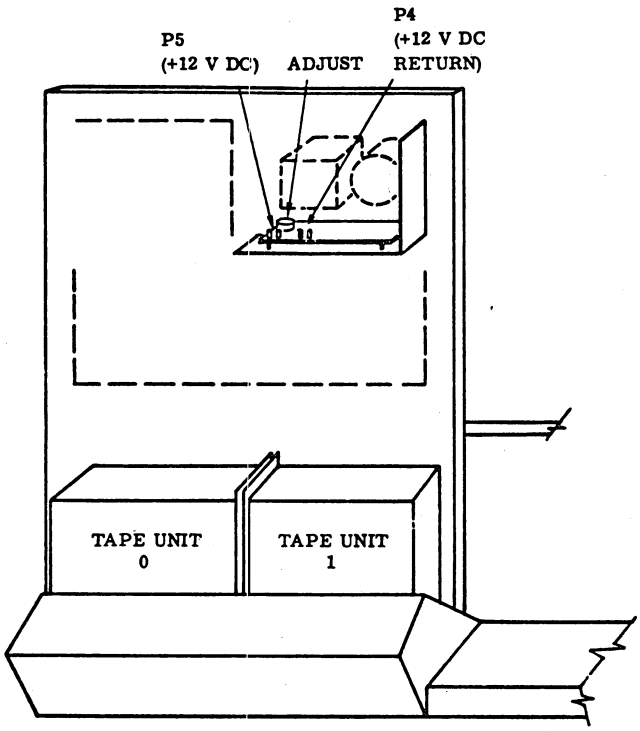

Figure 6H-7. Tape Cassette Power Supply Voltage Test Points

4. Release the latches and pull the equipment mounting frame forward.
5. Identify and remove the wires from the power supply.
6. Take out three mounting screws from the base of the power supply and remove the power supply.
7. Install the new power supply in the same place and orientation as the old one.
8. Reconnect the wires to the power supply.
9. Reconnect the power cord to the primary power source.
10. Perform the power supply test (procedure H8).

STORAGE MODULE DRIVE, DRIVE INTERFACE, AND CONTROL UNIT PROCEDURES

6J

CONTENTS

Procedure		Page
J1	Power Turn-On	6J-1
J2	Power Turn-Off	6J-1
J3	Disk Pack Handling	6J-2
J4	Disk Pack Removal	6J-3
J5	Absolute Filter Replacement	6J-4
J6	Actuator Assembly Inspection Cleaning	6J-6
J7	Carriage Rails and Bearings Cleaning	6J-7
J8	Shroud and Spindle Cleaning	6J-7
J9	Lockshaft Cleaning/Lubricating	6J-7
J10	Interlock Check/Replacement	6J-9
J11	Blower Motor Replacement	6J-9
J12	Drive Belt Replacement/ Adjustment	6J-12
J13	Drive Motor Replacement	6J-13
J14	Hysteresis Brake Placement	6J-14
J15	Brake Plate (Spindle Lock) Replacement	6J-15
J16	Heads Loaded Switch Adjustment/Replacement	6J-15
J17	Control/Indicator Panel Replacement	6J-18
J18	Logic Board Replacement	6J-18
J19	Servo Pre-Amplifier Replacement	6J-19
J20	Static Ground Spring Adjustment/ Replacement	6J-19
J21	Power Supply Voltage Tests	6J-21
J22	Interlock Control Board Replacement	6J-21
J23	Relay and Brush Control Replacement	6J-22
J24	Read Pre-Amplifier Board Replacement	6J-24
J25	Write Board Replacement	6J-24
J26	Disk Adapter Replacement/ Installation	6J-27
J27	Control Unit Logic Board (Position 07 to 29) Replacement	6J-27
J28	Control Unit Maintenance Panel Replacement	6J-27
J29	Control Unit 5 V dc Power Supply Replacement	6J-29
J30	Control Unit Circuit Breaker Replacement	6J-30
J31	Control Unit Cooling Fan Replacement	6J-30
J32	Control Unit Air Filter Cleaning	6J-31
J33	Drive Interface Signal Cable Check	6J-31
J34	Control Unit Power Fail Detect Card Replacement	6J-31
J35	Sector Plug Replacement	6J-31
J36	Read/Write Head Alignment	6J-33

Figure		Page
6J-1	Storage Module Drive Physical Characteristics	6J-1
6J-2	Disk Pack Installation	6J-2
6J-3	Deck Support Bracket	6J-4
6J-4	Deck Rear Hold-Down Screw	6J-5
6J-5	Absolute Filter Assembly	6J-5
6J-6	Actuator Elements (Heads Extended)	6J-6
6J-7	Carriage Rails and Bearings	6J-7
6J-8	Deck Assemblies	6J-8
6J-9	Spindle Assembly	6J-9
6J-10	Control Interlocks	6J-10
6J-11	Storage Module Drive Deck Support Bracket	6J-11
6J-12	Blower Motor Replacement	6J-12
6J-13	Drive Motor Assembly	6J-13
6J-14	Hysteresis Brake Assembly	6J-15
6J-15	Brake Plate Assembly	6J-16
6J-16	Heads Loaded Switch	6J-17
6J-17	Servo Pre-Amplifier	6J-18
6J-18	Control Panel Assembly	6J-19
6J-19	Printed Circuit Board Chassis Map	6J-20
6J-20	Static Ground Spring Assembly	6J-20
6J-21	Storage Module Drive Power Supply	6J-22
6J-22	Interlock Control Board	6J-23
6J-23	Relay and Brush Control Board	6J-24
6J-24	Read Pre-Amplifier Board	6J-25
6J-25	Write Board Assembly	6J-26
6J-26	Control Unit Physical Characteristics	6J-27
6J-27	Control Unit Logic Board Chassis Map	6J-28
6J-28	Control Unit Maintenance Panel	6J-29
6J-29	Power Supply Assembly	6J-30
6J-30	Control Unit Power Supply Assembly	6J-32

J1 POWER TURN-ON

To turn on power to the storage module drive, proceed as follows:

1. Verify that the storage module drive is connected to the primary power source and that the primary power is on.
2. Turn on the AC POWER circuit breaker located on the rear panel of the storage module drive and check that the blower motor (figure 6J-1) and fans on the rear door of the cabinet start.
3. Turn on the POWER SUPPLY circuit breaker on the rear panel of the storage module drive and check that the logic fan starts (figure 6J-1).
4. Turn on the control unit circuit breaker located on the front of the first drive inside the lower panel below the control unit.

J2 POWER TURN-OFF

To turn off power to the storage module drive, proceed as follows:

1. Press the START switch on the operator control panel. The indicator light should extinguish, and heads unload.
2. Remove the disk pack according to procedure J4.

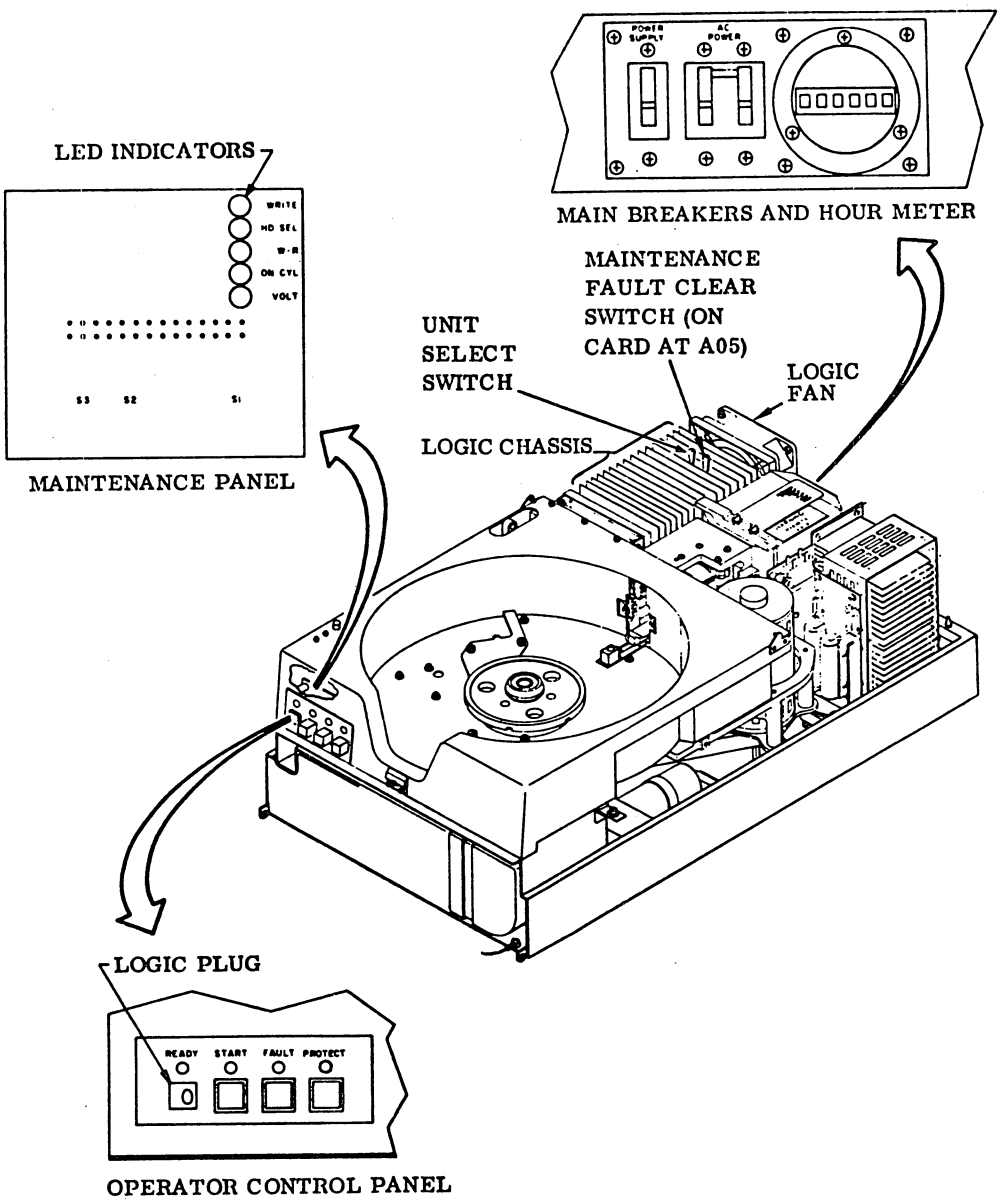

Figure 6J-1. Storage Module Drive Physical Characteristics

3. Turn off the POWER SUPPLY circuit breaker on the rear panel of the storage module drive.

4. Turn off the AC POWER circuit breaker on the rear panel of the storage module drive

NOTE

It is generally good practice to leave the ac circuit breaker on unless maintenance or safety precautions require total power-down of the drive.

J3 DISK PACK HANDLING

Make certain that the disk pack to be installed has been maintained according to the Preventive Maintenance section. To install the disk pack (figure 6J-2) perform the following:

1. Raise the pack access cover. (The AC POWER circuit breaker must be on.)

2. Lift the disk pack by the plastic canister handle.

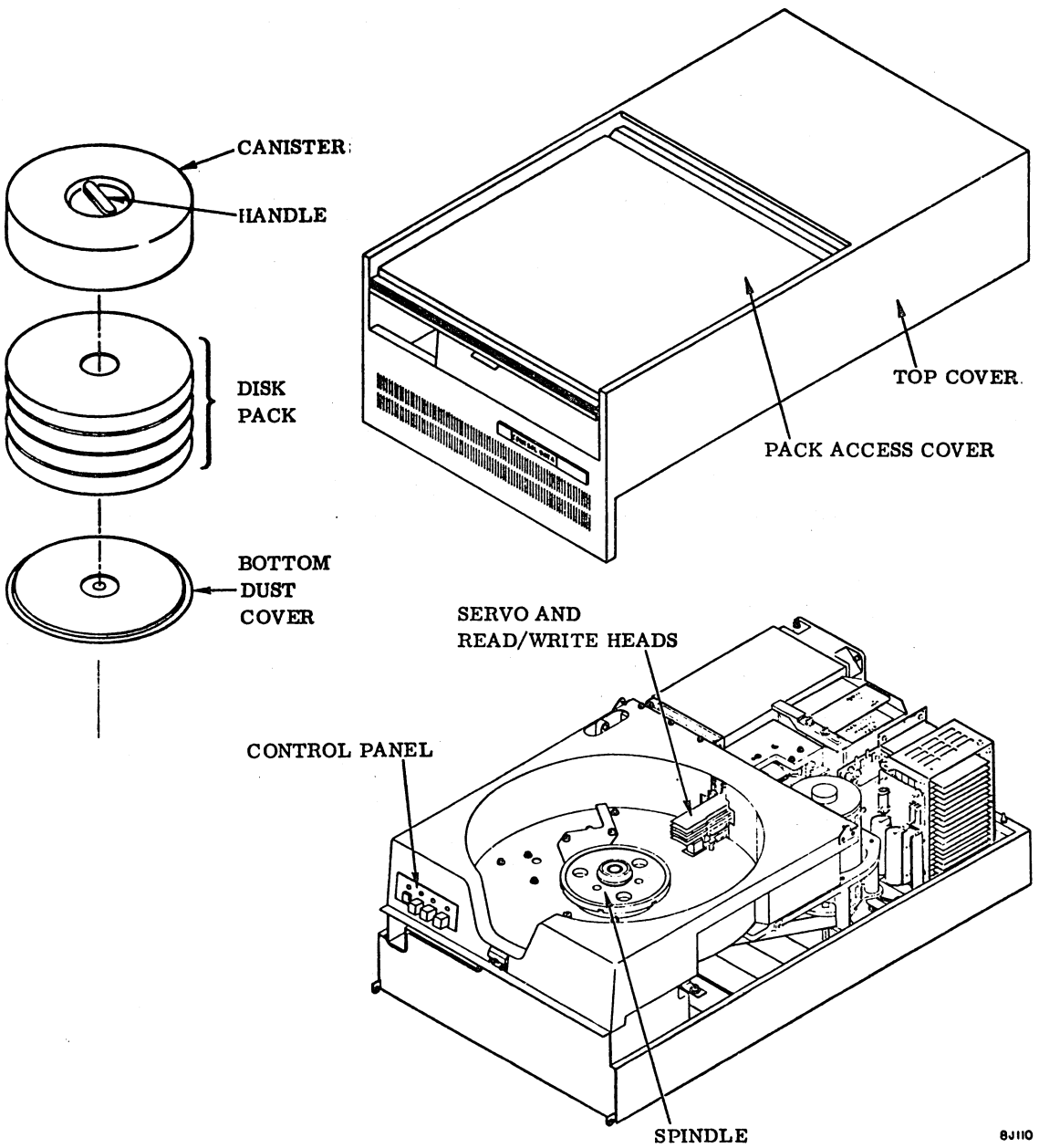

Figure 6J-2. Disk Pack Installation

3. Disengage the bottom dust cover from the disk pack by rotating the handle in the center of the cover. Set the cover aside in an uncontaminated area.

CAUTION

Avoid abusive contact between the disk pack and the spindle. The read/write heads are sometimes manually positioned during maintenance procedures. Make certain that the heads are fully retracted.

4. Place the disk pack onto the spindle.

NOTE

A spindle lock mechanism is actuated when the disk pack canister cover is on the spindle. The mechanism holds the spindle stationary while loading or unloading a disk pack.

5. Twist the canister handle clockwise to lock the disk pack in place.

NOTE

A click may be heard as the spindle lock mechanism engages.

6. Lift the canister clear of the disk pack, place the bottom dust cover on the canister, and set it aside in an uncontaminated area.

7. Close the pack access cover immediately to prevent entry of dust and contamination of disk surfaces.

8. Press the START switch on the operator control panel of the storage module drive and observe the drive for the following:

   a. START indicator illuminates.

   b. Spindle motor starts.

   c. Heads load after approximately 25 seconds.

   d. READY indicator illuminates.

CAUTION

If abnormal loading of heads is observed, power down the drive and call for technical support.

9. If the above sequence of events occurred normally, proceed with operation of the storage module drive.

To ensure maximum disk pack life and reliability, observe the following precautions:

10. Store disk packs in a machine-room atmosphere (60,F to 90,F (16,C to 33,C), 10% to 80% relative humidity).

11. If the disk pack must be stored in a different environment, allow two hours for adjustment to the computer environment before use.

12. Never store the disk pack in sunlight or in a dirty environment.

13. Store the disk packs flat, not on edge. They may be stacked with similar packs when stored (a maximum of three may be stacked).

14. Always be sure that both the top and bottom plastic covers are on the disk pack and locked together whenever it is not actually installed in a drive.

15. When marking the packs, use a pen or felt tip marker that does not produce loose residue. Never use a lead pencil. Write on the label before it is applied to the disk pack.

J4 DISK PACK REMOVAL

To remove the disk pack (figure 6J-2), perform the following:

1. Press the operator control panel START switch to extinguish the START indicator.

2. Raise the pack access cover.

3. Check that disk pack rotation has stopped. (Stopping time is approximately 1.5 minutes without the brake and 20 seconds with the brake.)

CAUTION

The read/write heads are sometimes manually positioned during maintenance procedures. Make certain that the heads are fully retracted.

4. Place the plastic canister over the mounted disk pack so that the post protruding from the center of the disk pack is received into the canister handle.

5. Twist the canister handle counterclockwise until the disk pack is free of the spindle.

CAUTION

Avoid abusive contact between the disk pack and the spindle assembly.

6. Lift the canister and disk pack clear of the spindle.

7. Close the pack access cover.

8. Place the bottom dust cover in position on the disk pack and lock it by rotating the handle clockwise in the center of the cover.

CAUTION

It is good practice to inspect any pack, removed from a disk drive, for a head crash condition.

J5 ABSOLUTE FILTER REPLACEMENT

To replace the absolute filter, perform the following:

1. Remove the disk pack according to procedure J4.
2. Set the ac and power supply circuit breakers on the rear panel of the storage module drive to off.
3. Remove the cabinet top cover by releasing the front latches, ground strap, and support rod.
4. Remove the two Allen head screws securing the deck assembly to the base assembly. (See figure 6J-3.)
5. Remove the rear hold-down screw and the spacer from the keeper hole and install the screw and the spacer in the deck before raising the deck assembly. (See figure 6J-4.)

NOTE

The spacer must be placed with the short end first.

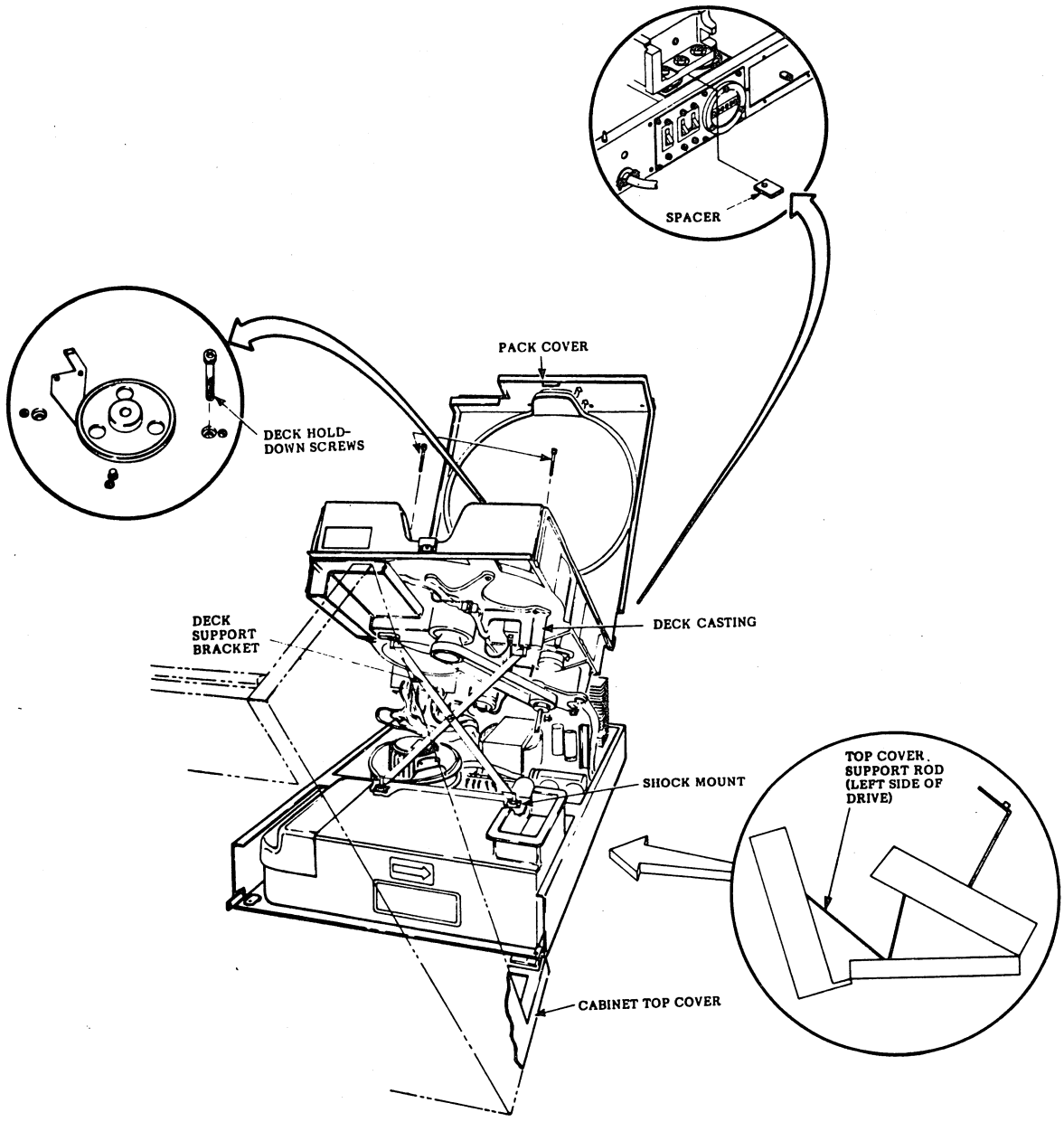

Figure 6J-3. Deck Support Bracket

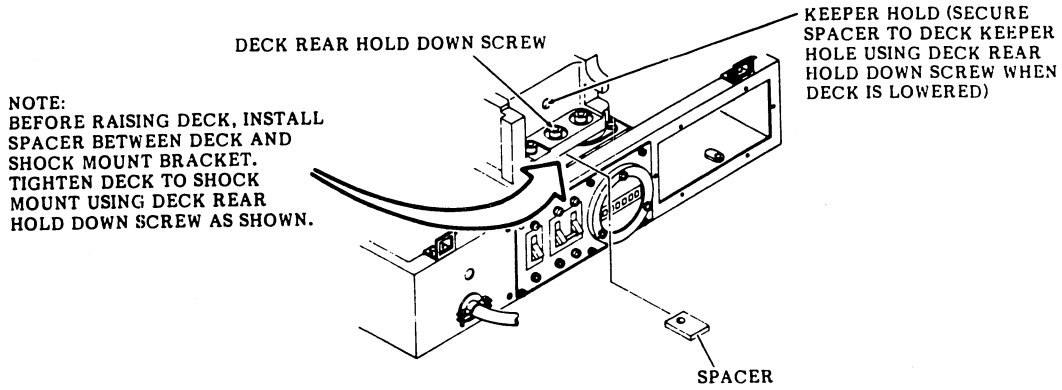

Figure 6J-4. Deck Rear Hold-Down Screw

6. Raise the deck and install the support bracket. (See figure 6J-3.)

7. Remove the screw securing the filter hold-down strap to the base assembly and remove the strap. (See figure 6J-5.)

NOTE

Some drives may have the absolute filter secured to the base assembly with double-sided tape. Remove the filter by prying between the filter and the base assembly with a screwdriver or a knife blade.

8. Remove the absolute filter by grasping and pulling the filter straight off the blower outlet and out of the base assembly.

9. Position the replacement filter in the base opening and push it straight back over the blower outlet. Verify that the gasket is still in place.

10. Secure the hold-down strap to the base assembly using one screw. Tighten the screw.

11. Raise the deck assembly and remove the support bracket and the lower deck assembly.

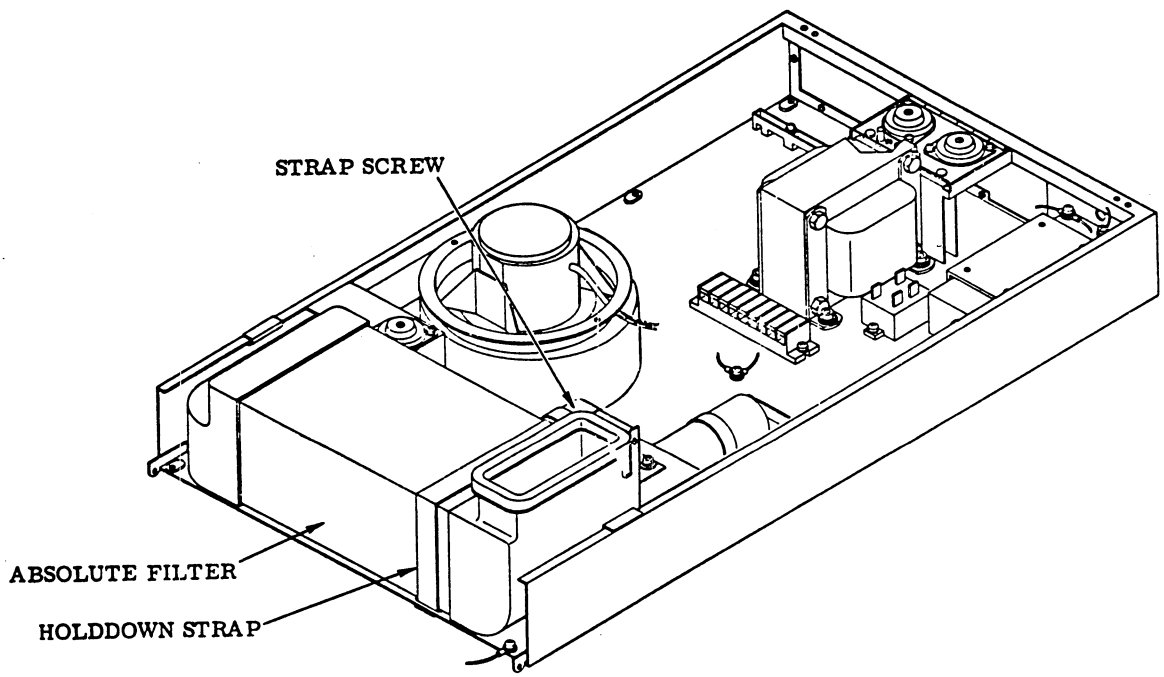

Figure 6J-5. Absolute Filter Assembly

12. Remove the deck rear hold-down screw and spacer. Install the screw and spacer in the keeper hole on the deck assembly between and above the shock mounts.

13. Tighten the two screws securing the deck assembly to the base assembly.

14. Install the cabinet top cover.

15. Turn on the AC POWER and POWER SUPPLY circuit breakers. Allow the blower to purge the unit for 10 minutes. Set the circuit breakers to off.

J6 ACTUATOR ASSEMBLY INSPECTION/ CLEANING

To inspect and clean the actuator assembly, perform the following:

1. Open the cabinet top.

2. Open the pack access cover.

3. Inspect the entire actuator for dust and other foreign materials. Pay particular attention to the following areas:

   The circular cutouts in the face of the magnet assembly (receives voice coil).

   The rail surfaces (particularly horizontal surfaces) of the carriage track on which the carriage and bearing assembly travels. (See figure 6J-6.)

4. Use lint-free gauze dampened with media cleaning solution (not soaked) to remove deposits or attracted particles.

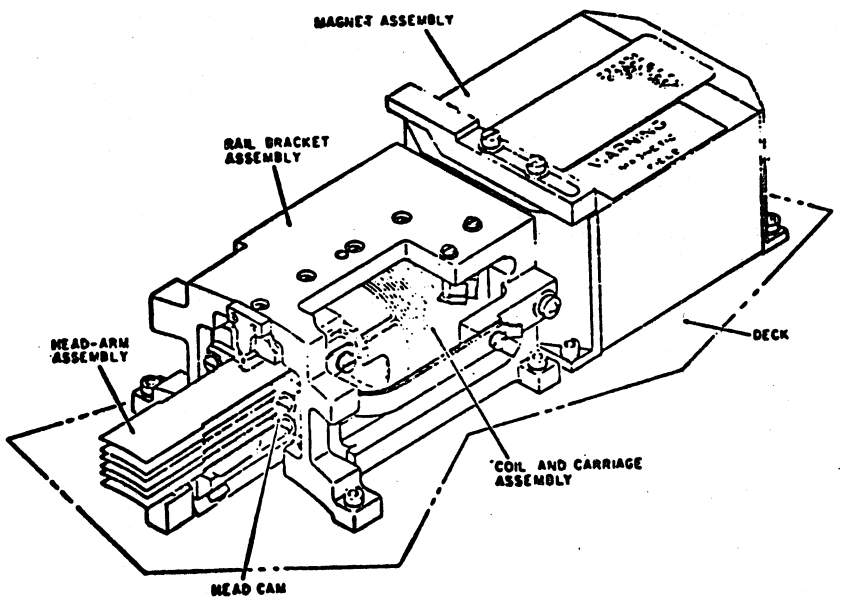

Figure 6J-6. Actuator Elements (Heads Extended)

J7 CARRIAGE RAILS AND BEARINGS CLEANING

To clean the carriage rails and bearings, perform the following:

1. Turn off the AC POWER circuit breaker.
2. Remove the cabinet top cover by releasing the front latches, ground strap, and support rod.
3. Open the pack access cover.
4. Remove the disk pack.
5. Clean the rails and bearing surfaces with lint-free gauze that is slightly dampened with media cleaning solution. It is necessary to manually move the carriage to gain access to all surfaces. Do not move the carriage so far that heads load. (See figure 6J-7.)
6. Wipe the rails and bearing surfaces with dry gauze
7. Check for cleanliness by manually moving the carriage. If any slight resistance to free rolling is encountered, repeat steps 5 and 6.
8. Restore the storage module drive to its original condition.

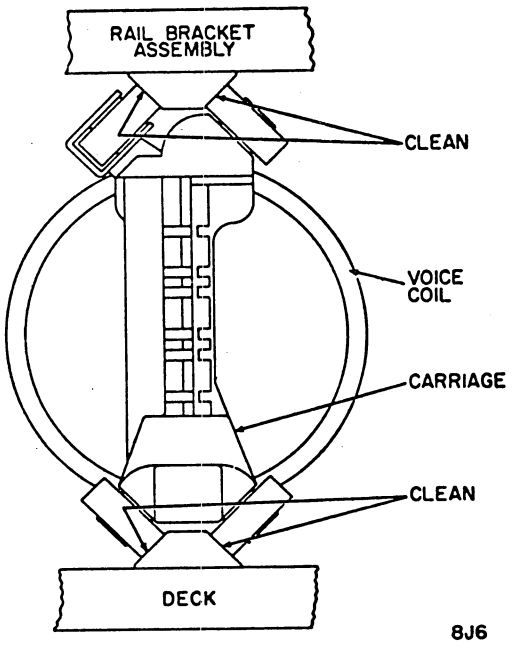

Figure 6J-7. Carriage Rails and Bearings

J8 SHROUD AND SPINDLE CLEANING

To clean the shroud and spindle (figure 6J-8), perform the following:

1. Stop the spindle motor by pressing the START switch on the operator control panel.
2. Open the pack access cover.

CAUTION

Keep the disk pack at least 3 inches away from any part of the magnet assembly.

3. Remove the disk pack (procedure J4).

CAUTION

Bearing damage can occur if alcohol runs into the spindle.

4. Clean the shroud with a lint-free gauze that is slightly dampened with media cleaning solution. Wipe the shroud to remove all dirt and smudges. Thoroughly wipe the spindle surface.
5. After cleaning the shroud, use a wad of adhesive-type tape and pick up any particles that were not picked up with gauze. Make certain that all particles are removed from the interior of the shroud.
6. Restore the storage module drive to its original condition.

J9 LOCKSHAFT CLEANING/LUBRICATING

The following recommended procedure should be performed as a regularly scheduled preventive maintenance item. The regular preventive maintenance interval should be sufficient in most cases; however, factors such as the number of packs, number of pack changes, etc., may require more frequent attention.

To clean and lubricate the lockshaft (figure 6J-9), perform the following:

1. Stop the spindle, if it is running, by pressing the START switch on the storage module drive operator control panel.
2. Open the pack access cover.
3. Remove the disk pack, if it is present.
4. Using a clean lint-free cloth, clean the threads in the lockshaft of the storage module drive and the lockscrew of the pack.

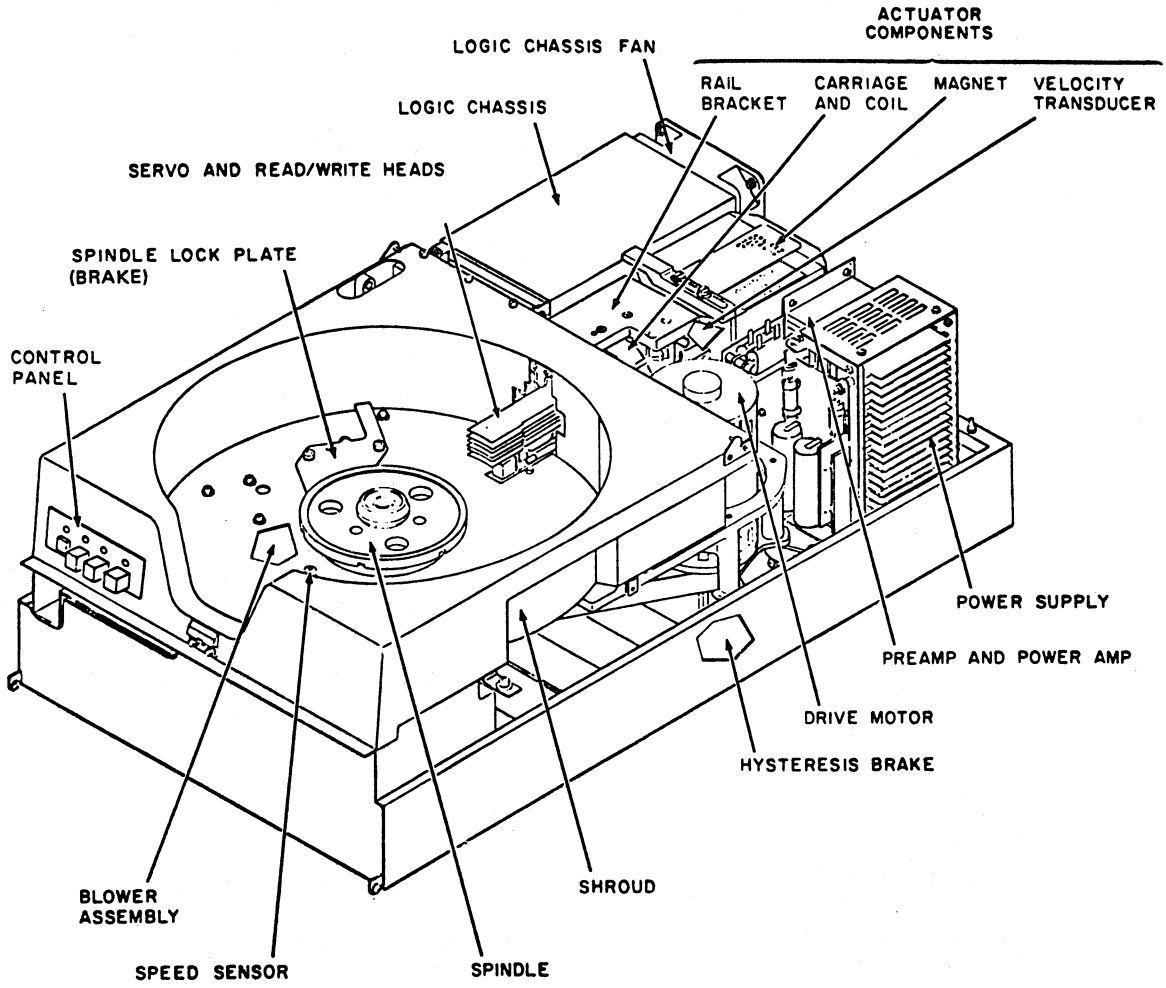

Figure 6J-8. Deck Assemblies

96768683 · 01

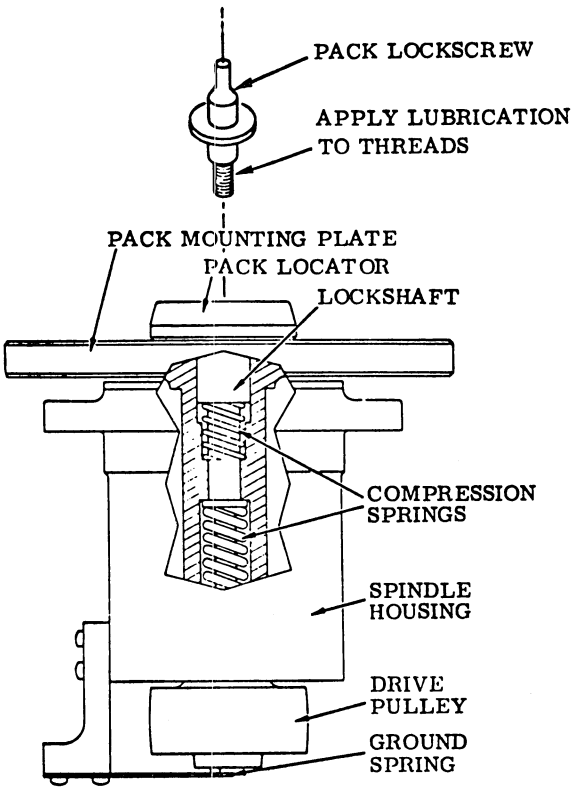

Figure 6J-9. Spindle Assembly

5. Apply a thin coat of lubricant (Molycote G) to the threads of a spare pack lockscrew. (Be sure the lockscrew is free from wear or damage.)

6. Turn the lubricated pack lockscrew by hand into the lockshaft. Repeat this process several times to transfer the lubricant to the lockshaft threads.

7. Remove the lockscrew from the lockshaft.

8. Return the storage module drive to its normal operating condition by reversing steps 1 to 3 above.

J10 INTERLOCK CHECK/REPLACEMENT

To check and replace the interlock, perform the following:

1. To check the pack access cover interlock (figure 6J-10):

   a. With storage module drive power off (procedure J2), lift the pack access cover.

   b. Locate the position of the cover interlock (figure 6J-10).

   c. Place the test leads of an ohmmeter on the common and normally open contacts of the switch. The meter should indicate an open circuit.

   d. Press the interlock switch and observe the meter for a closed circuit.

   e. If the meter readings agree with steps C and D, verify that the circuit wires are securely attached to the common and normally open contacts of the switch.

   f. If the meter readings do not agree with steps C and D, identify and remove the circuit wires and replace the bad switch with a new one.

2. To check the deck interlock switch (figure 6J-10):

   a. Make sure that storage module drive power is turned off; then remove the top cover of the drive.

   b. Install the rear hold-down screw and spacer. Open the deck assembly and install the support brackets (figure 6J-3).

   c. Place the test leads of an ohmmeter on the common and normally open contacts of the deck interlock switch. The meter should indicate an open circuit.

   d. Press the interlock switch and observe the meter for a closed circuit.

   e. Verify that the circuit wires are securely fastened to the common and normally open contacts of the switch.

   f. If the meter readings do not agree with steps C and D, identify and remove the circuit wires, and replace the switch with a new one. (An offset Phillips screwdriver is required to replace the switch.)

   g. If the new switch actuator has a plastic screw in the end, remove it and replace it with the metal screw from the faulty switch actuator.

3. Close the deck assembly, return the rear hold-down screw and spacer to their storage position, replace the top cover and restore the storage module drive to its normal operating condition.

J11 BLOWER MOTOR REPLACEMENT

To replace the blower motor, perform the following:

1. Set the AC POWER circuit breaker to off. Remove the disk pack.

2. Remove the cabinet top cover, by releasing the front latches, ground strap, and support rod.

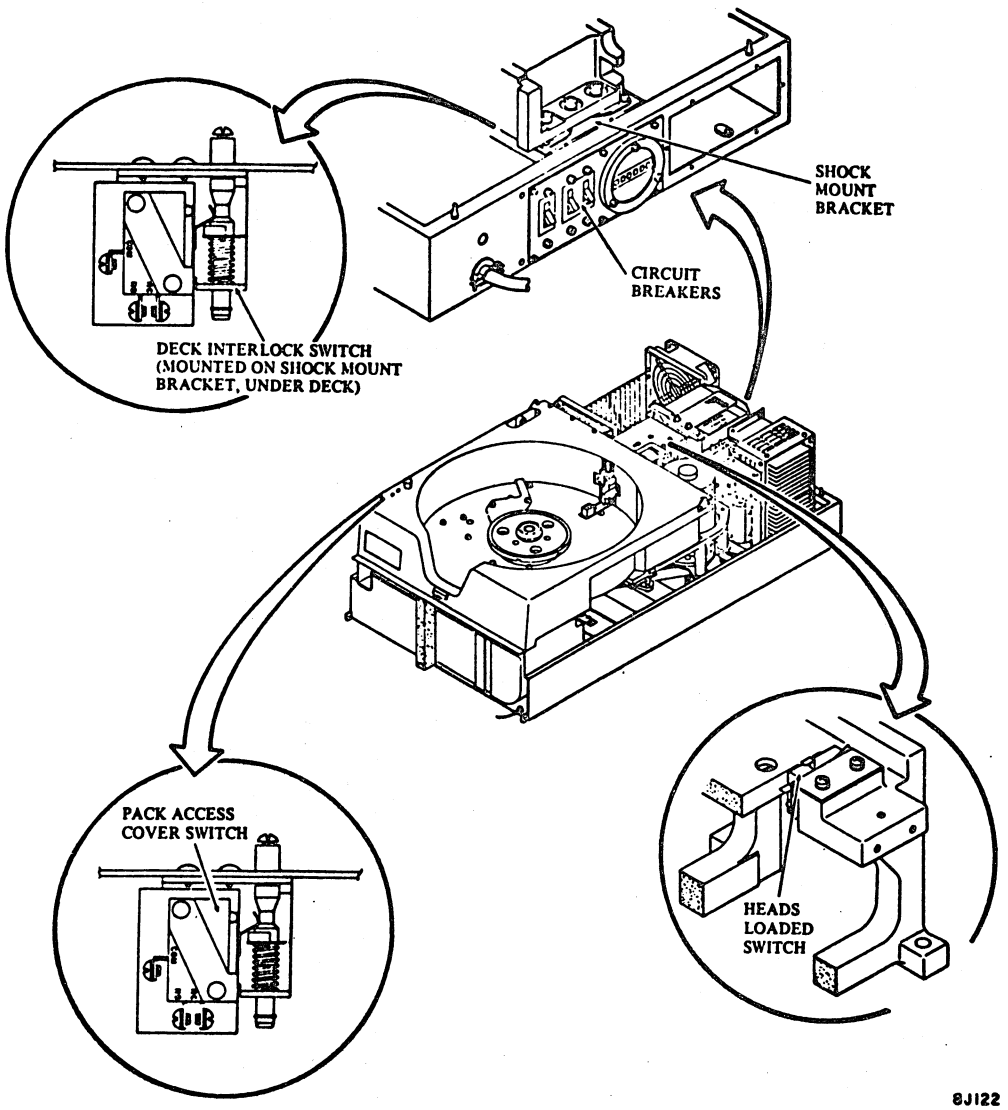

Figure 6J-10. Control Interlocks

3. Remove the two Allen head screws in the bottom of the shroud securing deck to the base assembly (figure 6J-11).

4. Install the deck rear-hold down screw and spacer (figure 6J-11) before raising the deck. (The spacer must be placed with the short end first.)

5. Raise the deck assembly and install the support bracket (figure 6J-11).

6. Identify the blower motor leadwires and disconnect the wires (figure 6J-12).

7. Pull out the control unit on its slide rails.

8. Remove the side panel by releasing the one-quarter turn locks inside the panel.

9. Remove the six screws and washers securing the blower assembly to the base assembly (the screws are under the base assembly) (see figure 6J-12).

10. Install the replacement blower assembly in the base assembly. Orient the blower motor leadwires (see figure 6J-12).

11. Secure the blower assembly to the base assembly using six screws and washers. Tighten the screws.

12. Connect the blower motor leadwires.

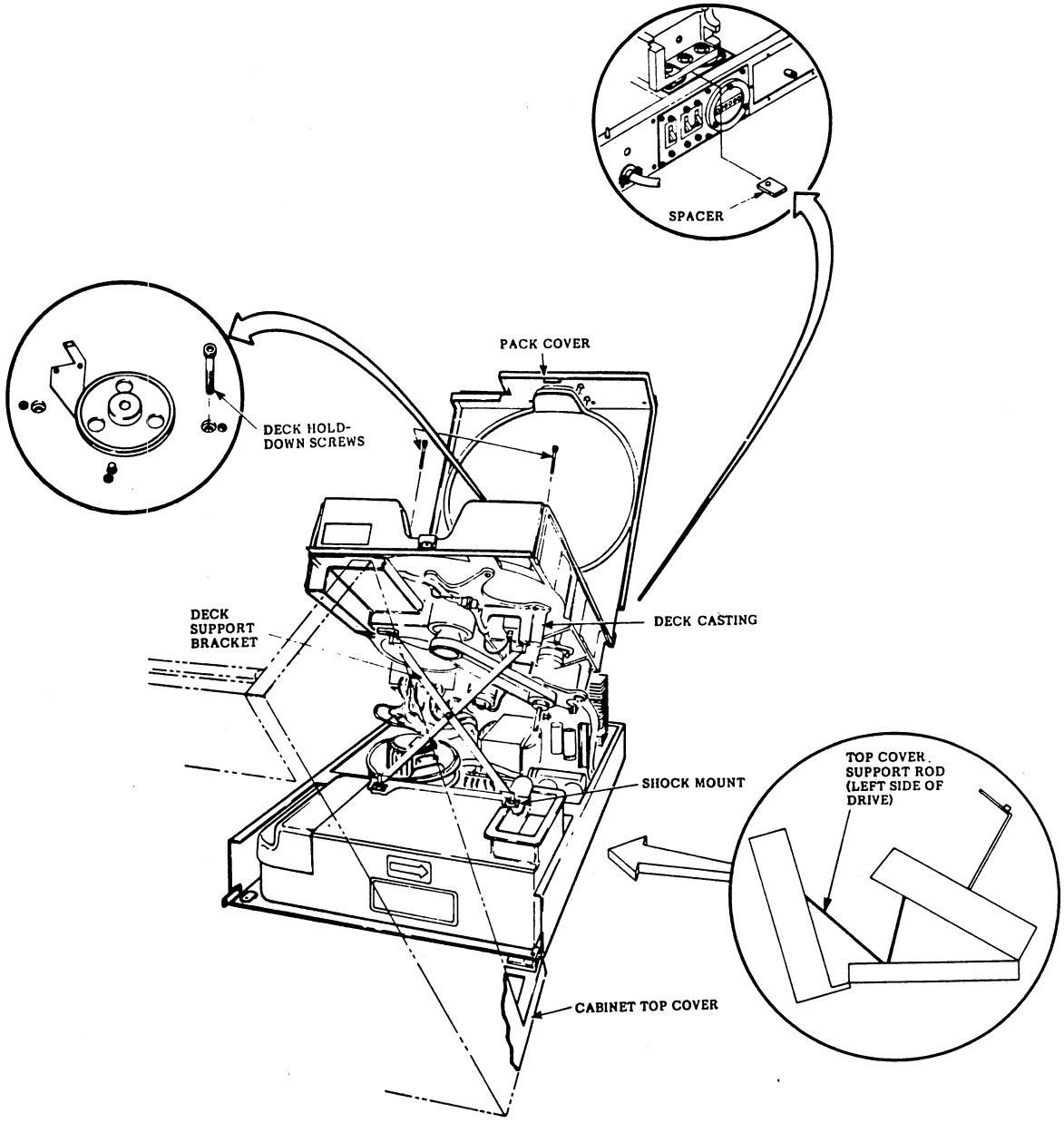

Figure 6J-11. Storage Module Drive Deck Support Bracket

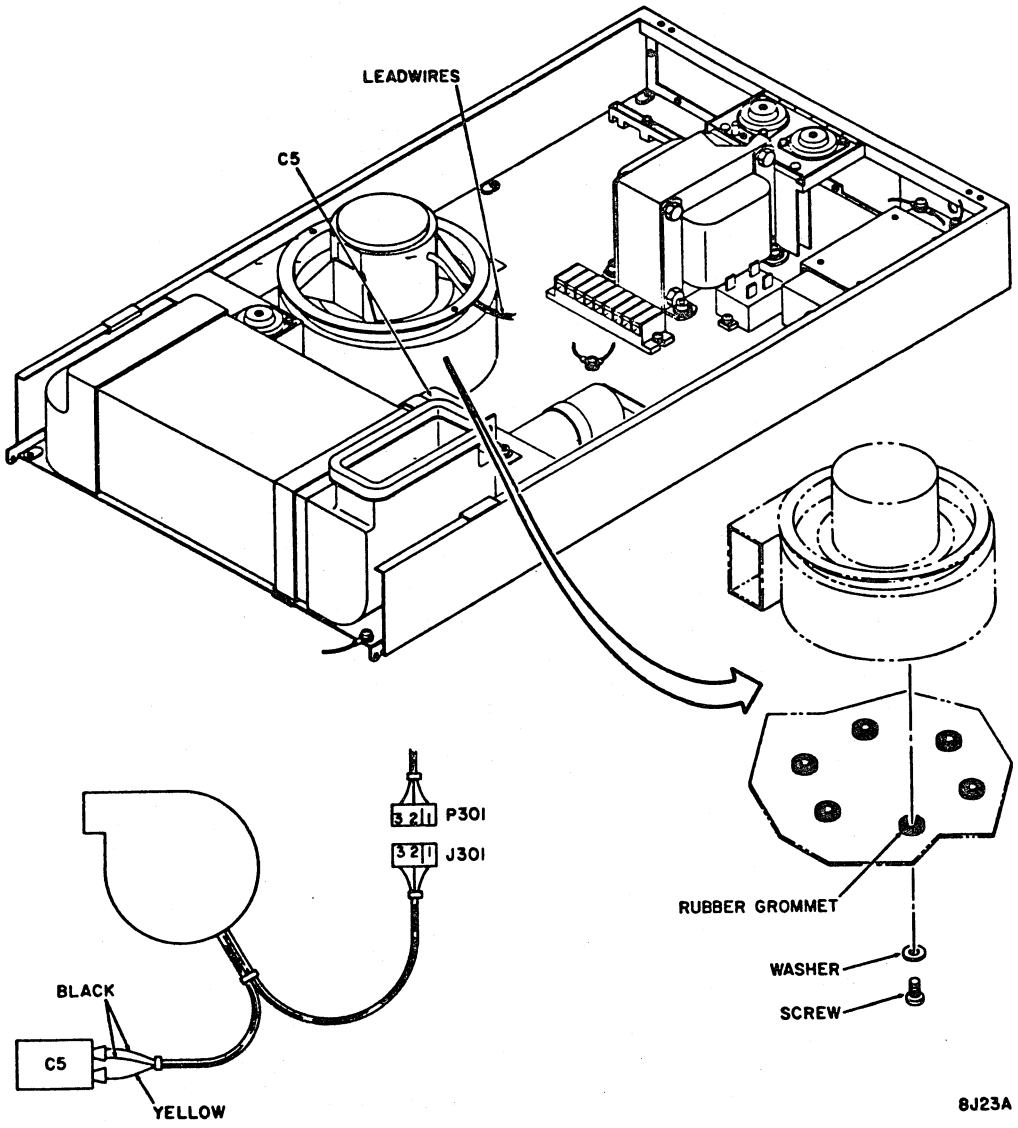

Figure 6J-12. Blower Motor Replacement

13. Raise the deck, remove the support bracket, and lower the deck. Remove the deck rear hold-down screw and spacer. Install the screw and spacer in the keeper hole on the back of the deck.

14. Secure the deck assembly to the base assembly using two screws through the bottom of the shroud. Tighten the screws.

15. Restore power and test.

J12 DRIVE BELT REPLACEMENT/ADJUSTMENT

To replace and/or adjust the drive belt, perform the following:

1. Set the AC POWER circuit breaker to off.

2. Remove the disk pack (procedure J4).

3. Remove the cabinet top cover by releasing the front latches, ground strap, and support rod.

4. Remove the two Allen head screws in the bottom of the shroud, securing the deck assembly to the base assembly.

5. Install the deck rear hold-down screw and spacer (figure 6J-11) before raising deck. (The spacer should be placed with the short end first.)

6. Raise the deck assembly and install the support bracket (figure 6J-11).

7. Loosen the idler spring adjustment nut until only a few threads of the screw protrude through the nut (figure 6J-13).

8. Remove the drive belt from the drive motor pulley by rolling the belt off the motor pulley in a clockwise direction as viewed from under the deck. Remove the belt from the drive.

9. Install the replacement belt on the spindle pulley.

10. While maintaining hand tension on the belt, begin to roll the belt onto the motor pulley while manually rotating the spindle pack hub in a counterclockwise direction.

11. Manually rotate the drive motor pulley several revolutions to make certain that the drive belt is properly tracking on the drive motor and spindle pulley.

12. Perform the drive belt adjustment procedure:

    a. Measure the distance between the end of the spring hook and nut as shown in figure 6J-13. (Note the specified measurement table.)

    b. Adjust the idler spring tension by turning the nut on the spring hook at the back of the deck assembly (figure 6J-13). Clockwise rotation of the nut increases spring length; counterclockwise rotation of the nut decreases spring length. After adjusting the nut to the dimension shown in figure 6J-13, turn nut one quarter turn counterclockwise.

13. Raise the deck and remove the support bracket. Lower the deck onto the base assembly.

14. Remove the deck rear hold-down screw and spacer.

15. Secure the deck to the base assembly using two screws. Tighten the screws.

J13 DRIVE MOTOR REPLACEMENT

To replace the drive motor, perform the following:

1. Set the AC POWER and POWER SUPPLY circuit breakers to off.

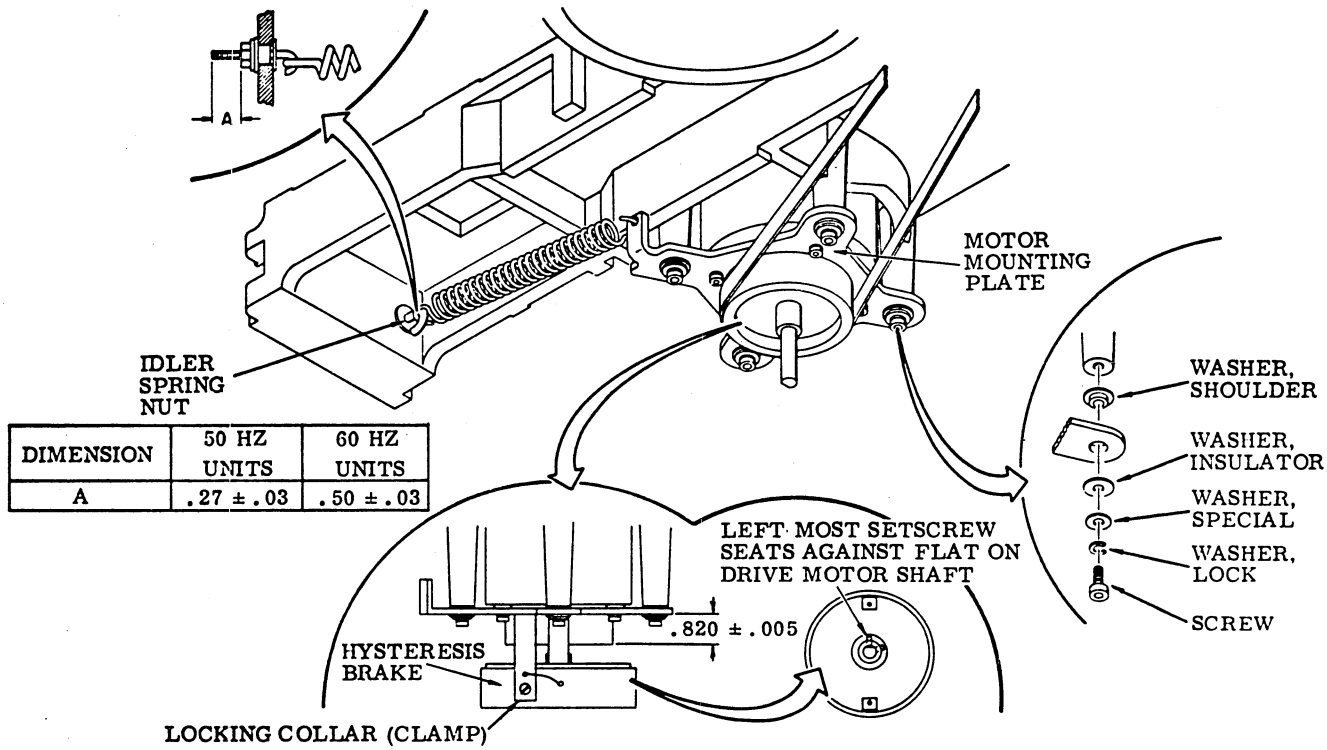

DIMENSION	50 HZ UNITS	60 HZ UNITS
A	.27 ± .03	.50 ± .03

Figure 6J-13. Drive Motor Assembly

2. Remove the disk pack (procedure J4).

3. Remove the cabinet top cover by releasing the front latches, ground strap, and support rod.

4. Remove the two Allen head screws in the bottom of the shroud securing the deck assembly to the base assembly.

5. Install the deck rear hold-down screw (figure 6J-11) before raising the deck.

NOTE

The spacer should be placed short end first.

6. Raise the deck assembly and install the support bracket (figure 6J-11).

7. Disconnect the drive motor leadwires (figure 6J-12).

8. For units with hysteresis brakes, perform the following:

   a. Disconnect the wires.

   b. Remove the four nuts securing the brake to the motor mounting plate.

   c. Loosen the locking collar (clamp) securing the brake to the motor shaft.

   d. Remove the brake assembly (figure 6J-14).

9. Relax the idler spring tension by turning the adjustment nut on the rear of the deck until about two threads are visible on the screw.

10. Disconnect the idler spring from the motor mounting plate.

11. Remove the four screws, washers, and bushings securing the motor mounting plate to the deck casting (figure 6J-13). Remove the motor and motor mounting plate through the bottom of the deck.

12. Position the replacement drive motor and mounting plate beneath the deck (figure 6J-13) and secure to the deck using four screws, washers, and nylon bushings. Torque screws to 10 ±2 inch-pounds.

13. Connect the idler spring to the motor mounting plate.

14. Position the flat side of the drive belt around the spindle pulley. Hold the belt taut around the pulley while performing the next step so the belt does not slip off the pulley.

15. While maintaining hand tension on the belt, roll the belt onto the motor pulley while manually rotating the spindle pack hub in a counterclockwise direction.

16. Rotate the spindle pulley several revolutions to seat the belt on the pulley.

17. For units with hysteresis brakes, perform the following:

   a. Position the hysteresis brake on the drive mounting plate (figure 6J-13).

   b. Secure the hysteresis brake to the motor mounting plate using nuts and washers. Tighten the nuts.

   c. Tighten the locking collar on the brake coupling.

18. Connect the drive motor leadwires (figure 6J-12).

19. Adjust the drive belt (procedure J12, steps 7 through 15).

J14 HYSTERESIS BRAKE PLACEMENT

To replace the hysteresis brake, perform the following:

1. Set the AC POWER circuit breaker to off.

2. Remove the disk pack (procedure J4).

3. Remove the cabinet top cover by releasing the front latches, ground strap, and support rod.

4. Remove the two Allen head screws in the bottom of the shroud securing the deck assembly to the base assembly (figure 6J-11).

5. Install the deck rear hold-down screws and spacer (figure 6J-11) before raising the deck. (The spacer should be placed short end first.)

6. Raise the deck assembly and install the support bracket. Lower the deck onto the bracket.

7. Disconnect the hysteresis brake leadwires.

8. Remove the four nuts and washers securing the brake assembly (figure 6J-14) to drive the motor mounting plate.

9. Release the collar clamp on the motor drive shaft and remove the brake assembly.

10. Position the replacement brake assembly on the motor mounting plate. Secure the brake assembly to the motor mounting plate with nuts and washers. Tighten the nuts.

11. Connect the hysteresis brake leadwires.

12. Tighten the collar clamp on the motor drive shaft.

13. Loosen the screw securing the brake mounting bracket to the motor plate and retighten it to relieve side loading of the shaft.

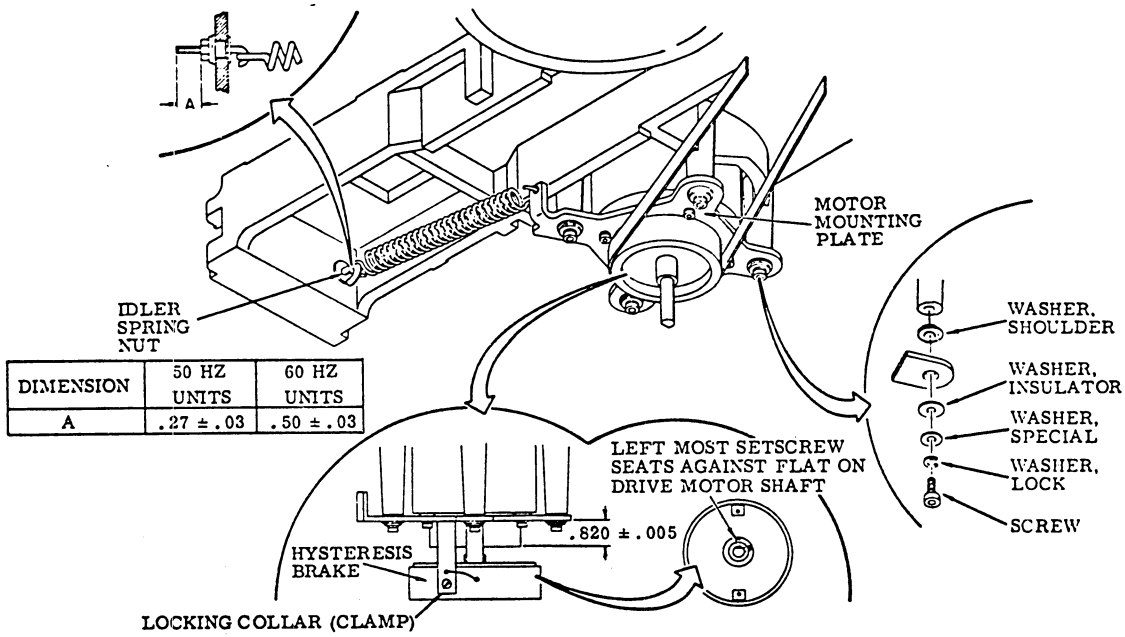

DIMENSION	50 HZ UNITS	60 HZ UNITS
A	.27 ± .03	.50 ± .03

Figure 6J-14. Hysteresis Brake Assembly

14. Raise the deck assembly and remove the support bracket. Lower the deck onto the base assembly. Remove the deck rear hold-down screw and spacer.

15. Secure the deck assembly to the base assembly with two Allen head screws.

16. Restore storage module drive to normal operating condition by reversing steps 1 through 5 of this procedure.

J15 BRAKE PLATE (SPINDLE LOCK) REPLACEMENT

To replace the brake plate, perform the following:

1. Set the AC POWER circuit breaker to off.

2. Remove the disk pack (procedure J4).

3. Remove the two Allen head screws and nylon bushings securing the brake plate to the deck assembly (figure 6J-15).

4. Remove the two nylon bushings from the faulty brake plate and install them on the replacement brake plate.

5. Remove the brake spring from the faulty brake plate and install the spring on the replacement brake plate.

6. Install the replacement brake plate with two nylon bushings and one brake spring on the deck assembly. Tighten the screws.

7. Restore the storage module drive to its normal operating condition and resume tests.

J16 HEADS LOADED SWITCH ADJUSTMENT/REPLACEMENT

To adjust the heads loaded switch, perform the following:

1. Set the AC POWER circuit breaker to off.

2. Remove the disk pack (procedure J4).

3. Raise the cabinet top cover. Remove the magnet cover (figure 6J-16) by prying the cover open with a screwdriver.

4. Identify the heads loaded switch leadwires. Disconnect the leadwires at the switch terminals (figure 6J-17).

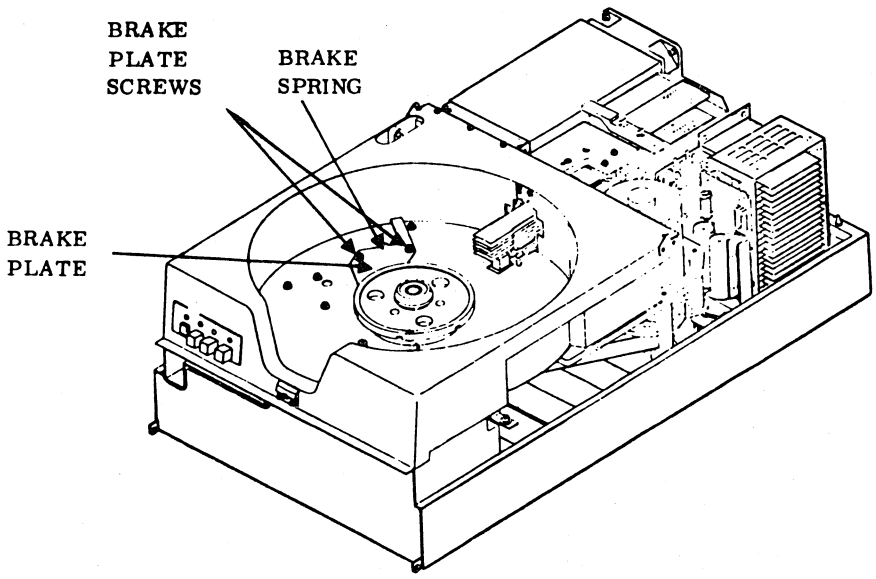

Figure 6J-15. Brake Plate Assembly

5. Connect a multimeter (set to Rx1) across the switch terminals.

6. Manually retract the carriage. The multimeter should indicate infinity. If adjustment is required, proceed to step 7. If the requirement is met, proceed to step 9 (figure 6J-8).

NOTE

Make certain that the coil is fully retracted while performing the next step.

7. Loosen the two screws securing the heads loaded switch to the switch mounting bracket (figure 6J-16).

8. Position the switch until the multimeter indicates infinity. Tighten the two screws securing the switch to the bracket.

9. Manually move the carriage toward the spindle while observing the multimeter. The multimeter must indicate 0 ohms when the carriage has traveled 1/16 to 1/8 inch from full retract stop. The distance is measured from the rear edge of the coil to the magnet. If required, reposition the switch by loosening the two screws securing the switch mounting bracket assembly to the frame.

10. Tighten the screws and recheck travel.

11. Disconnect the multimeter leadwires from the switch terminals.

12. Connect the heads loaded switch leadwires to switch terminals.

13. Install the magnet cover.

14. Close the cabinet top cover.

To replace the heads loaded switch, perform the following:

1. Set the AC POWER circuit breaker to off.

2. Remove the disk pack.

3. Raise the cabinet top cover.

4. Remove the magnet cover (figure 6J-16) by prying the cover open with a screwdriver.

5. Identify the heads loaded switch leadwires. Disconnect the leadwires at the switch terminals. Remove the switch and bracket.

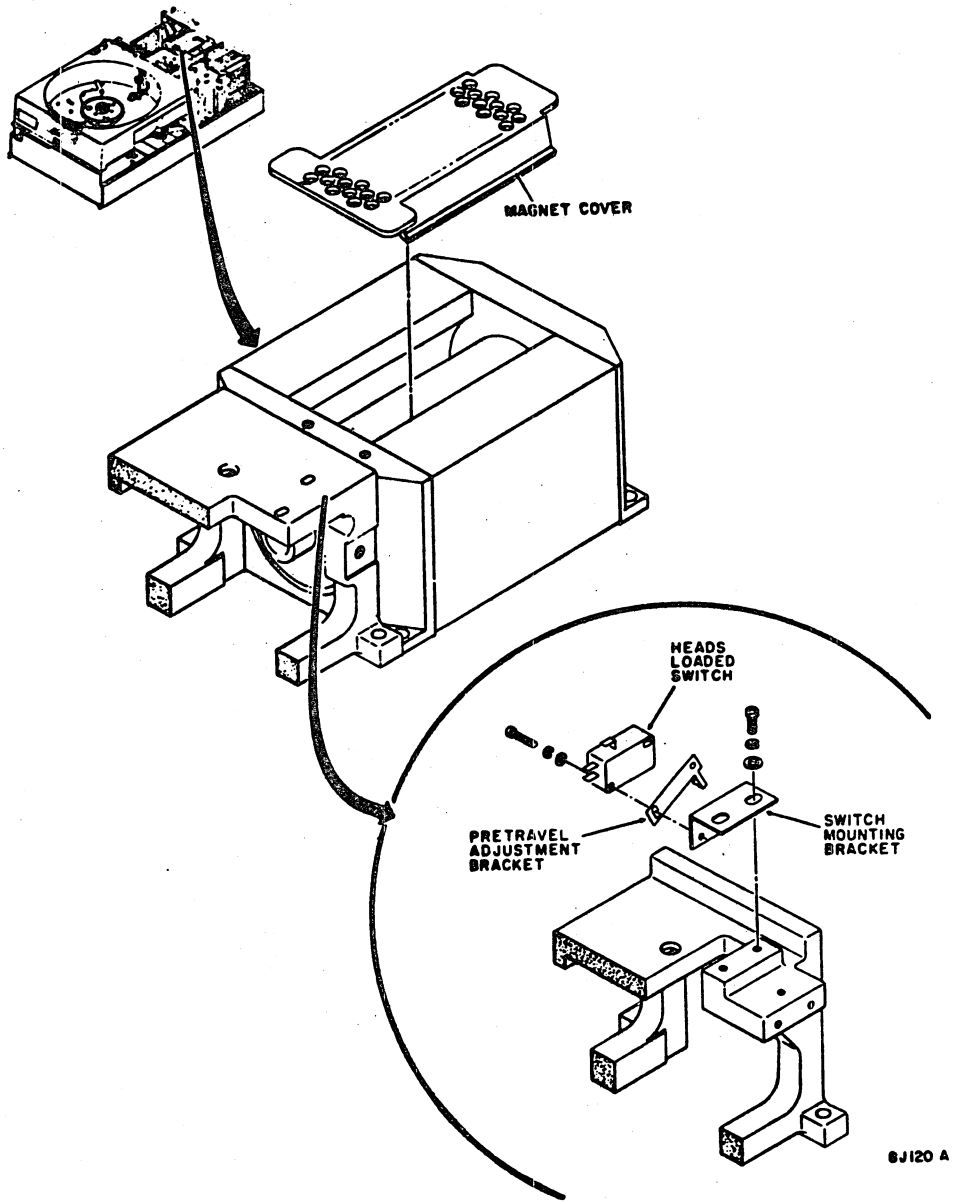

Figure 6J-16. Heads Loaded Switch

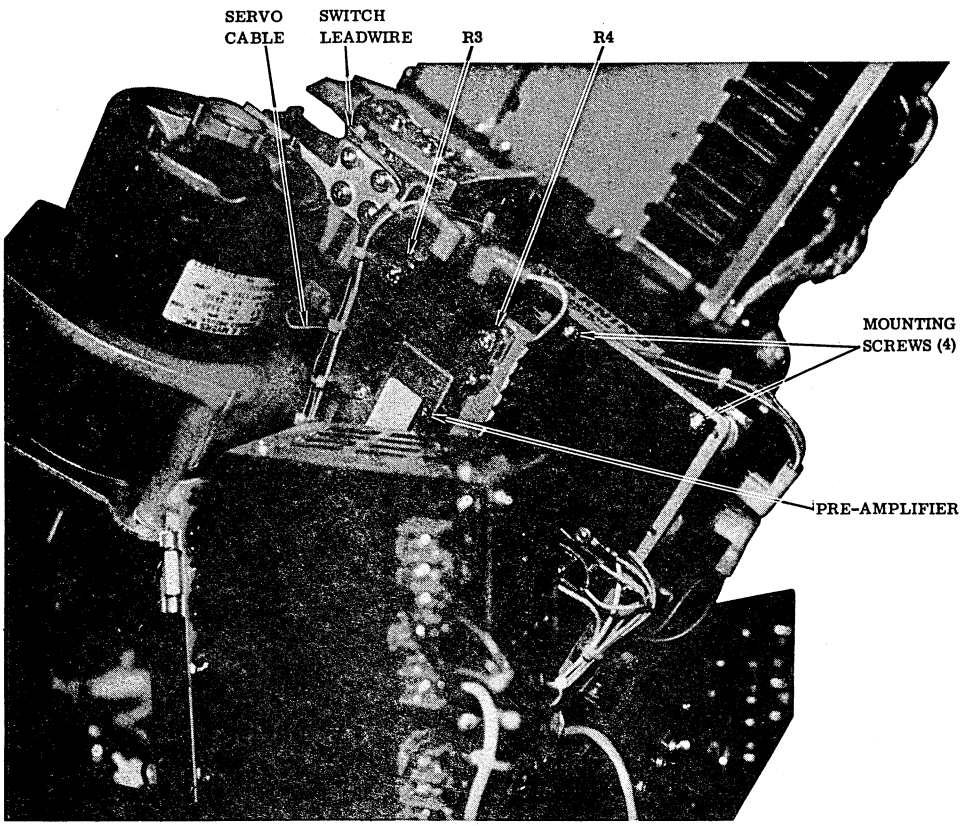

Figure 6J-17. SMD Servo Pre-amplifier.

6. Position the replacement switch on the switch mounting bracket. Loosely secure the switch to the bracket using two screws and washers.

7. Adjust the heads loaded switch beginning with step 5 of this procedure.

J17 CONTROL/INDICATOR PANEL REPLACEMENT

1. Turn off power to the storage module drive (procedure J2).

2. Remove the cabinet top cover by releasing the front latches, ground strap, and support rod.

3. Release the spring latches and pull out the panel (figure 6J-18).

   a. The left side of the panel can be released by applying pressure to the latch with a finger under the shroud.

   b. The right side can be released with a long screwdriver under the shroud and over the top of the front air intake.

(If trouble is encountered, it is necessary to lift the deck assembly to gain better access to the panel.)

4. Remove the cable and connector from the panel.

5. Install the cable and connector on the new panel.

6. Insert the panel in the mounting hole and press it into position. Verify that the spring latches are locked.

7. Restore the storage module drive to its operating condition and proceed with the testing sequence.

J18 LOGIC BOARD REPLACEMENT

To replace a storage module drive logic board, perform the following:

1. Turn off power supply circuit breaker.

2. Remove the cabinet top cover by releasing the front latches, ground strap, and support rod.

3. Replace the cam lock fastener, raise the logic cage to the upright position, and lock it in place with the slide bar located on the top of the magnet assembly.

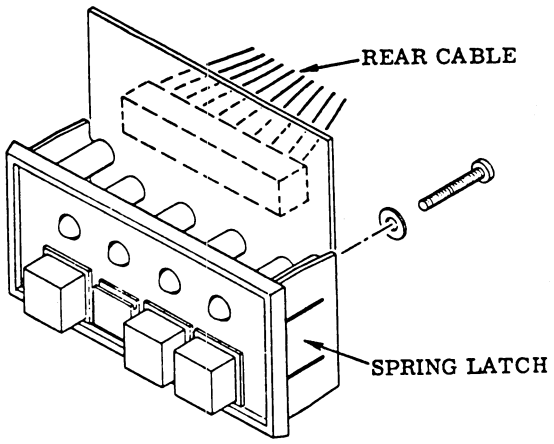

Figure 6J-18. Control Panel Assembly

4. Loosen the four screws on the cover of the logic cage and lift the cover off.

5. Locate the printed circuit board to be replaced. See figure 6J-19.

6. Using the board extractor tool (part number 87399200), remove the printed circuit board from the logic chassis.

7. Install the new printed circuit board.

8. Restart to step 5 after every board insertion.

9. Reinstall the logic cage cover and return the cage to its original position after the fault is isolated.

10. Restore the storage module drive to its original condition by reversing steps 1 through 3 of this procedure.

J19 SERVO PRE-AMPLIFIER REPLACEMENT

To replace the servo pre-amplifier, perform the following:

1. Turn off storage module drive power (procedure J2).

2. Remove the disk pack (procedure J4).

3. Remove the cabinet top cover by releasing the front latches, ground strap, and support rod.

4. Remove the two Allen head screws, securing the deck assembly to the base assembly (figure 6J-11).

5. Install the deck rear hold-down screw (figure 6J-11). (The spacer must be placed with the short end first.)

6. Raise the deck assembly and install the support bracket (figure 6J-11).

7. Disconnect the servo cable from the servo pre-amplifier. See figure 6J-17.

8. Identify and remove the snap-on wires from R3 and R4 (figure 6J-17)).

9. Remove three screws from the mounting plate, and loosen the bottom right fourth screw (figure 6J-17).

10. Lift the front of the mounting plate and swing it up and back on the loosened screw.

11. Remove the servo pre-amplifier assembly from the mounting plate by removing the two screws.

12. Remove the printed circuit board from the pre amplifier assembly and install a new one in its place.

13. Replace the pre-amplifier assembly on the mounting plate.

14. Reinstall the mounting plate in its original position.

15. Restore the drive to its original condition by reversing steps 1 through 9.

J20 STATIC GROUND SPRING ADJUSTMENT/REPLACEMENT

To adjust the static ground spring, perform the following:

1. Set the AC POWER circuit breaker to off.

2. Remove the disk pack (procedure J4).

3. Remove the top cover by releasing the front latches, ground strap, and support rod.

4. Remove the two Allen head screws in the bottom of the shroud securing the deck assembly to the base assembly.

5. Install the deck rear hold-down screw and spacer (figure 6J-11) before raising the deck. (The spacer should be placed short end first.)

6. Raise the deck assembly and install the support bracket. Lower the deck onto the support bracket.

7. Connect a push-pull gauge to the outer end of the ground spring (figure 6J-20).

8. The force (applied perpendicular to spring length) required to pull the ground spring contact free of the spindle lockshaft end seal should be within 90 ±10 grams.

9. If not within the requirements of step 8, loosen the two screws securing the ground spring block to the side of the spindle assembly (figure 6J-20). Reposition the block (slide the block toward the deck to increase the spring tension. Slide the block away from the deck to

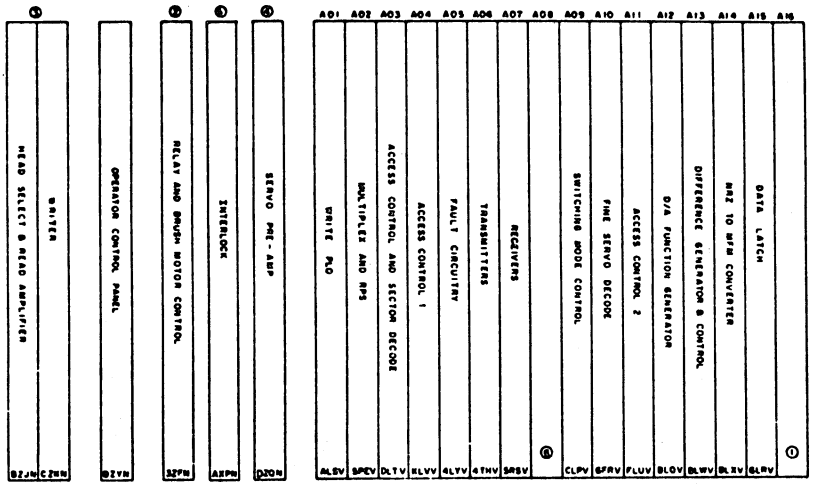

NOTES
① NOT USED
② A4 ASSEMBLY LOCATED UNDER DECK ASSEMBLY.
③ A5 ASSEMBLY LOCATED BEHIND LOGIC CHASSIS AND UNDER SHROUD.
④ LOCATED ON POWER AMP ASSEMBLY NEXT TO MAGNET.
⑤ LOCATED UNDER DECK ASSEMBLY
⑥ USED FOR HEAD ALIGNMENT

Figure 6J-19. Printed Circuit Board Chassis Map

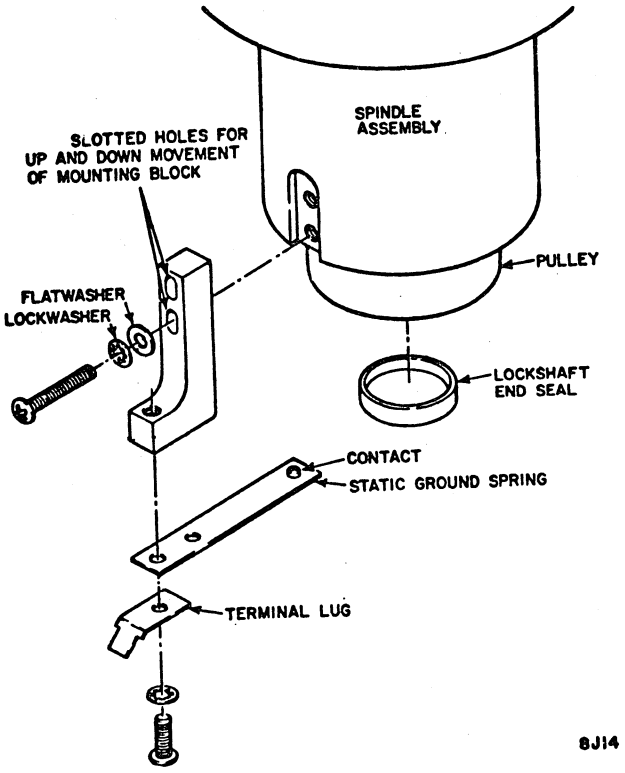

Figure 6J-20. Static Ground Spring Assembly

decrease spring tension), tighten the screws, and recheck the requirement of step 8. Repeat adjustments until the requirement is met.

10. Remove the ground spring leadwire at the ground spring mounting block terminal.

11. Connect a multimeter (set to Rx1) across the ground spring leadwire and ground spring terminal. The meter should indicate 0 ohms. If it doesn't, go to step 12. If it does indicate 0 ohms, go to step 13.

12. Clean the lockshaft end seal with gauze slightly dampened with media cleaning solution. Repeat step 11. If the requirement is not met; replace the ground spring. If it is met, go to step 13.

13. Disconnect the multimeter leadwires.

14. Connect the ground spring leadwire to the ground spring terminal lug.

15. Raise the deck assembly and remove the support bracket. Lower the deck assembly and remove the deck rear hold-down screw.

16. Secure the deck assembly to the base assembly with two screws. Tighten the screws.

17. Install the top cover.

To replace the static ground spring:

1. Set the AC POWER circuit breaker to off.

2. Remove the disk pack (procedure J4).

3. Remove the cabinet top cover by releasing the front latches, ground strap, and support rod.

4. Remove the two Allen head screws in the bottom of the shroud that secure the deck assembly to the base assembly.

5. Install the deck rear hold-down screw and spacer (figure 6J-11) before raising the deck. (The spacer should be placed short end first.)

6. Raise the deck assembly and install the support bracket. Lower the deck assembly onto the support bracket.

7. Disconnect the ground spring leadwire from the ground spring terminal lug.

8. Remove the two screws, lockwashers, one flat washer and one terminal lug securing the ground spring to the mounting block.

9. Position the replacement ground spring on the mounting block as shown in figure 6J-20.

10. Secure the ground spring to the mounting block, using two screws, lockwashers, one flat washer and one terminal lug (assemble hardware as shown in figure 6J-20). Tighten the screw.

11. Perform steps 7 through 17 of this procedure.

J21 POWER SUPPLY VOLTAGE TESTS

To test the storage module drive power supply, perform the following:

1. Open the cabinet top cover.

2. Start the spindle motor and allow the read/write heads to load.

3. If the heads do not load, proceed to step 4.

4. Using an ac/dc volt/ohmmeter, measure the output voltages on the 5 V dc regulator boards (figure 6J-21):

   a. The +5 V dc regulator TB01-4 output must be within +5.10 V dc ±0.05. If not, adjust the potentiometer shaft on the edge of the regulator board.

   b. The -5 V dc regulator output TB01-3 must be within -5.10 V dc ±0.05. If not, adjust the potentiometer shaft on the edge of the regulator board.

5. If the voltages do not adjust properly, call for technical support.

6. Measure the output voltages on the A3 assembly.

   a. The +20 V dc output at solder pin 6 should be +20 V dc to +24 V dc.

   b. The +12 V dc output at solder pin 7 should be +12 V dc to +14 V dc.

   c. The -20 V dc output at solder pin 10 should be -20 V dc to -24 V dc.

   d. The -12 V dc output at solder pin 9 should be -12 V dc to -14 V dc.

7. If the voltages are not present as indicated, check fuses F1, F2, F3, and F4.

8. If fuse replacement does not correct the problem, call for technical support.

J22 INTERLOCK CONTROL BOARD REPLACEMENT

To replace the interlock control board, perform the following:

1. Turn storage module drive power off (procedure J2).

2. Remove the disk pack (procedure J4).

3. Remove the cabinet top cover by releasing the front latches, ground strap, and support rod.

4. Remove the two Allen head screws securing the deck assembly to the base assembly (figure 6J-11).

5. Install the deck rear hold down-screw and spacer. (The spacer should be placed short end first.)

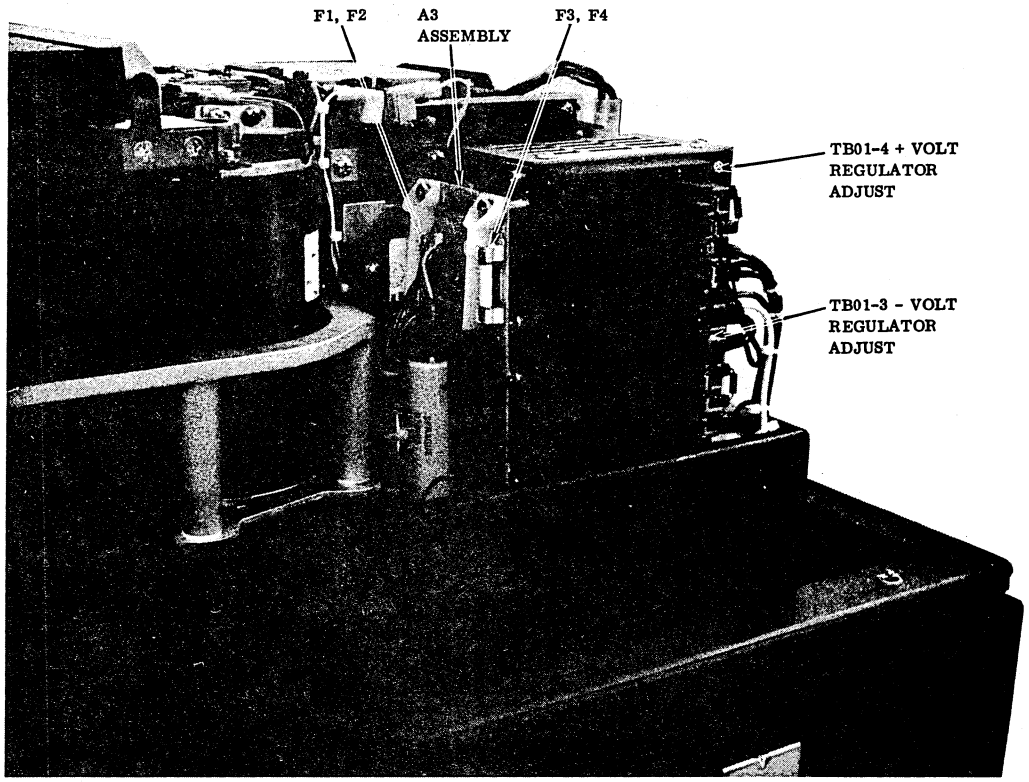

Figure 6J-21. Storage Module Drive Power Supply

6. Raise the deck assembly and install the support bracket.

7. Locate the position of printed circuit board type AXPN. (See figure 6J-22.)

8. Remove the two cables from the printed circuit board.

9. Remove the three mounting screws and remove the printed circuit board. (See figure 6J-22.)

10. Install the new AXPN board and reconnect the cable.

11. Restore the storage module drive to its original condition by reversing steps 1 through 6 of this procedure.

J23 RELAY AND BRUSH CONTROL REPLACEMENT

To replace the relay and brush control, perform the following:

1. Turn storage module drive power off (procedure J2).

2. Remove the disk pack (procedure J4).

3. Remove the cabinet top cover by releasing the front latches, ground straps, and support rod.

4. Remove the two Allen head screws securing the deck assembly to the base assembly (figure 6J-11).

5. Install the deck rear hold-down screw and spacer (figure 6J-11). (The spacer should be placed short end first.)

6. Raise the deck assembly and install the support bracket (figure 6J-11).

7. Locate the position of printed circuit board type 4ZFN. (See figure 6J-23.)

8. Identify and remove the snap-on wires from the printed circuit board.

9. Remove the four mounting screws and remove the printed circuit board. See figure 6J-23.

10. Install the new 4ZFN printed circuit board and reconnect the snap-on wires.

11. Restore the storage module drive to its original condition by reversing steps 1 through 6 of this procedure.

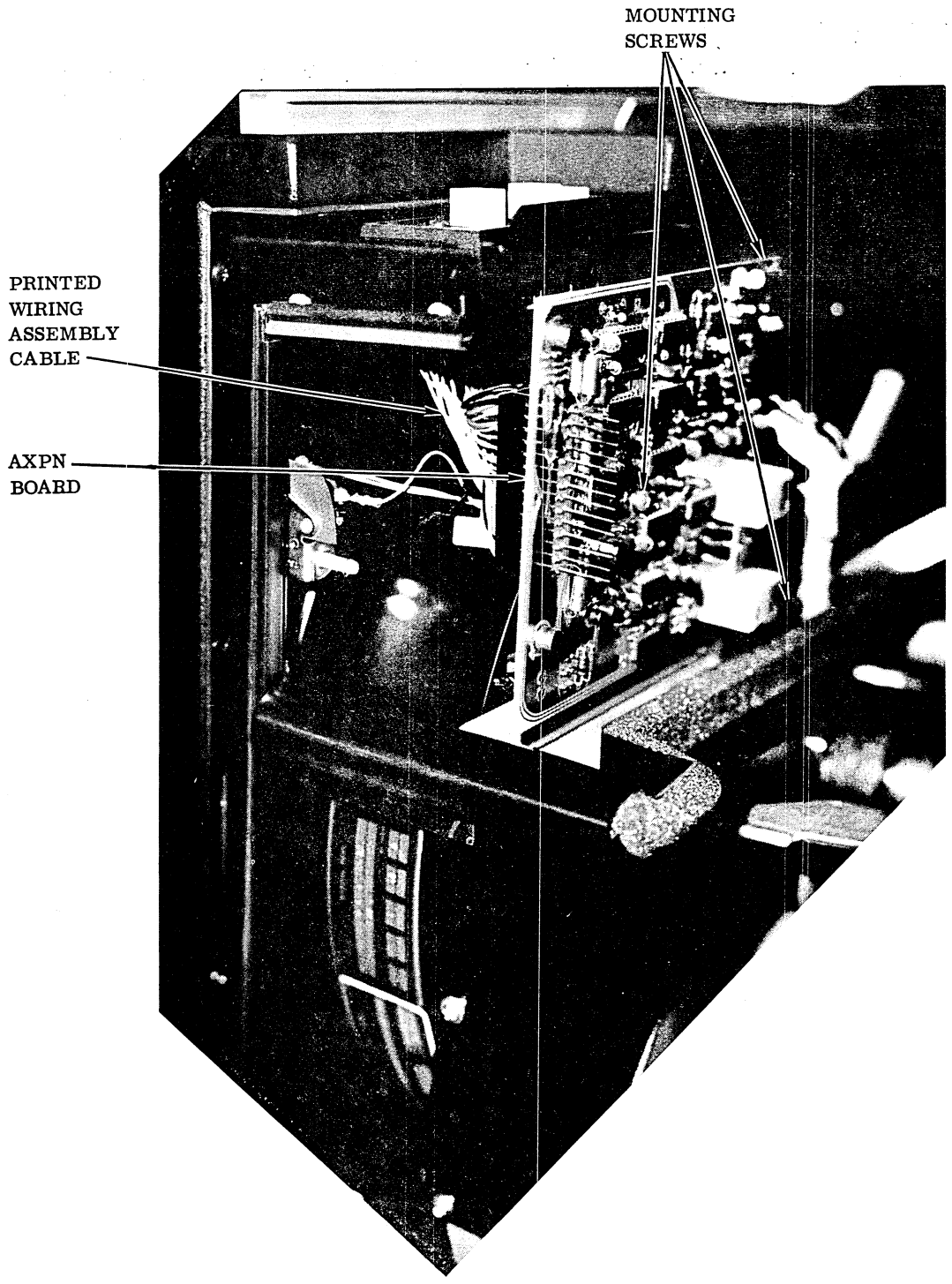

Figure 6J-22. Interlock Control Board

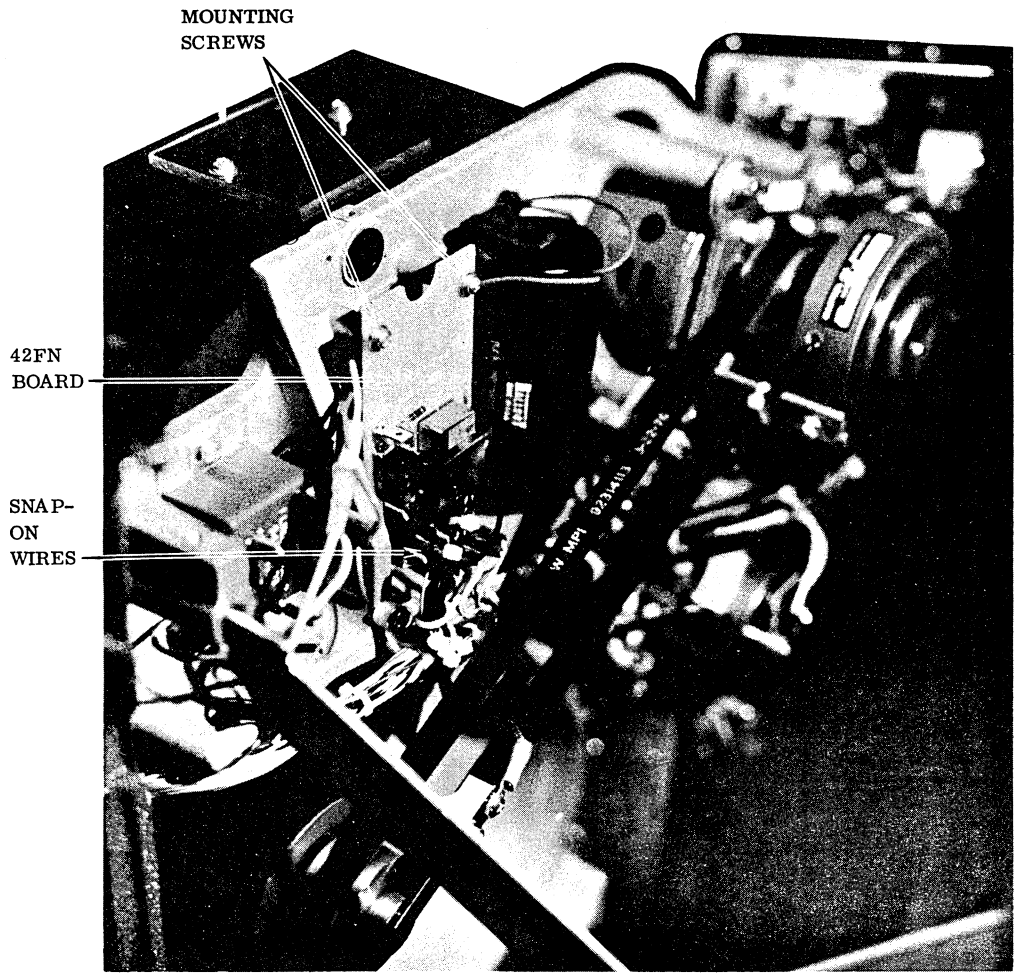

Figure 6J-23. Relay and Brush Control Board

J24 READ PRE-AMPLIFIER BOARD REPLACEMENT

To replace the read pre-amplifier board, perform the following:

1. Turn storage module drive power off (procedure J2).
2. Remove the cabinet top cover by releasing the front latches, ground strap, and support rod.
3. Release the cam lock fastener and raise the logic cage. Lock the logic cage in place with the slide bar, located on top of the voice coil magnet assembly (figure 6J-24).
4. Locate the position of the printed circuit board. (See figure 6J-24.)
5. Remove the support bracket from the top of the five head cable connectors. Disconnect and identify the head cables.
6. Disconnect cable J101 from the bottom of the board.
7. Remove the four mounting screws and lift out the board assembly.
8. Remove the piggy-back board, ensuring the board is removed squarely so as not to bend the staked pins.
9. Install the new piggy-back board.
10. Restore the storage module drive to its original condition by reversing steps 1 through 7 of this procedure.

NOTE

Do not tighten the board mounting screws until the support bracket is fully reinstalled.

J25 WRITE BOARD REPLACEMENT

To replace the write board, use the same procedure as for the read pre-amplifier board (procedure 24). (See figure 6J-25.)

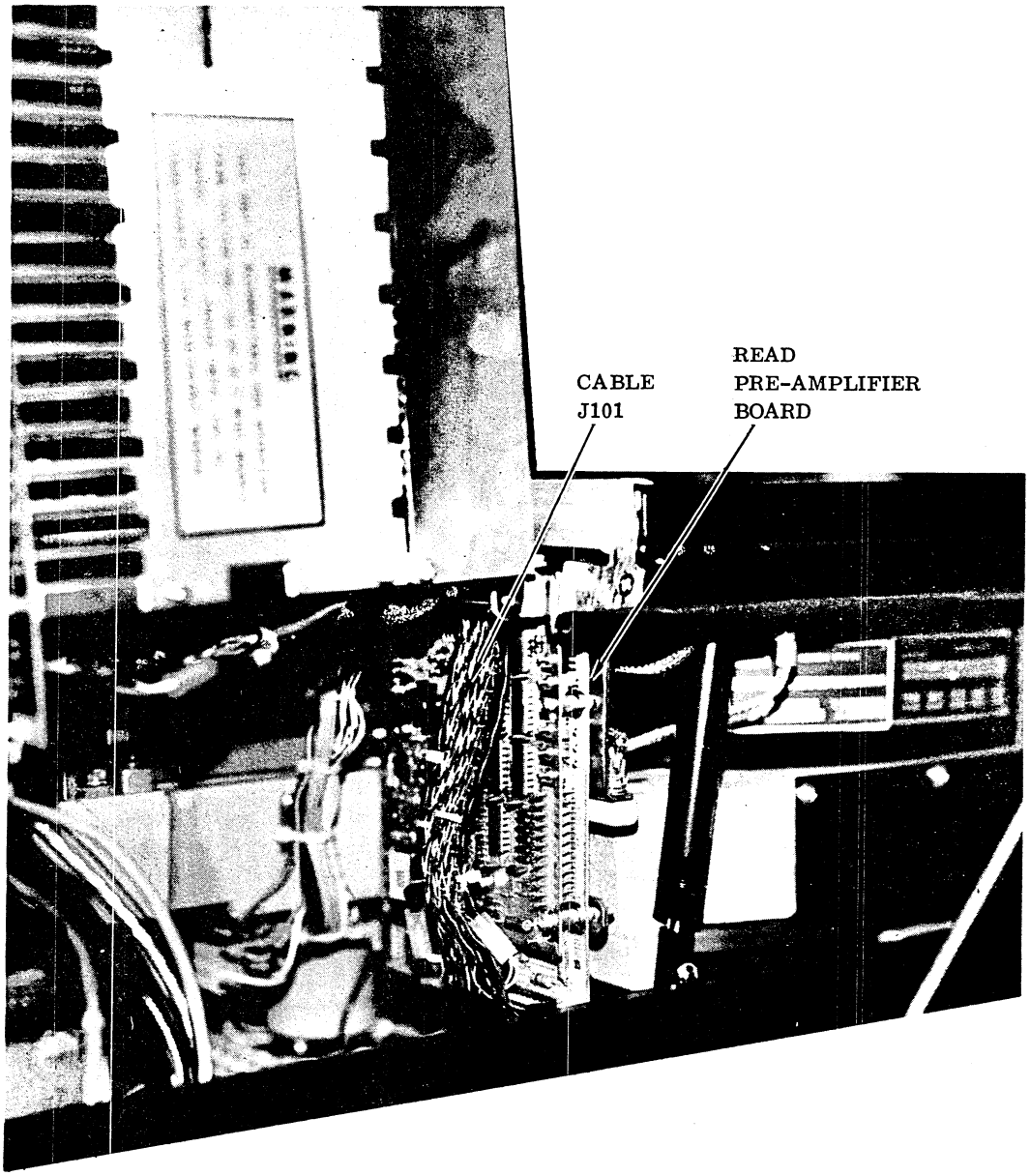

Figure 6J-24. Read Pre-Amplifier Board

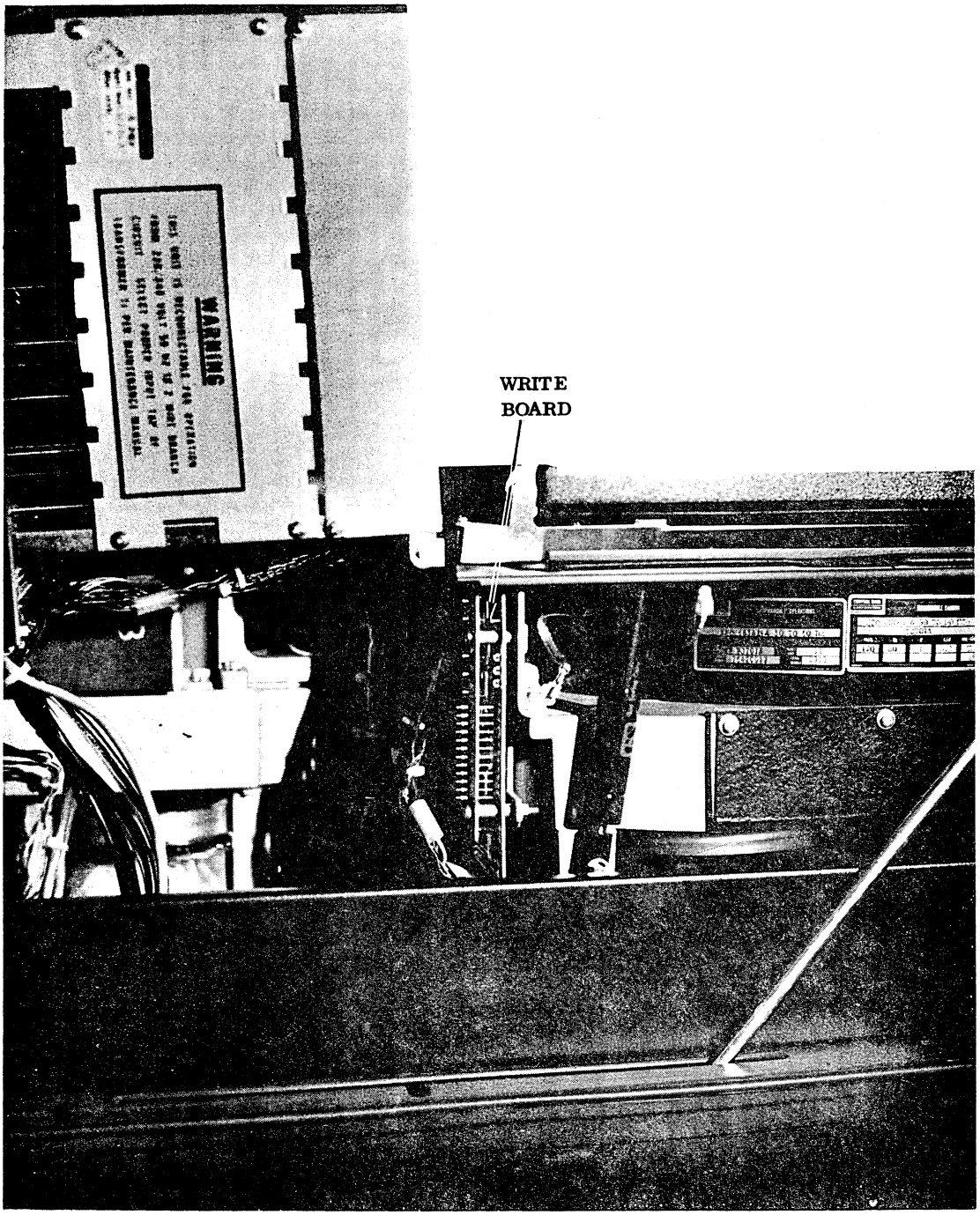

Figure 6J-25. Write Board Assembly

J26 DISK ADAPTER REPLACEMENT/INSTALLATION

To replace and/or install the drive interface, perform the following:

1. Press the STOP and then the MASTER CLEAR switches on the operators panel. Turn storage module drive power off {procedure J2}.
2. Open the right side panel of the processor cabinet for processor 1 or left side panel for processor 2.
3. Remove the cover plate at the front of the processor chassis by releasing the two captive fasteners.
4. Refer to table 4A-1, volume 1, for the location of the drive interface. If a drive interface is presently installed, remove it from the processor chassis using the extractor tool attached to the inside of the cover plate.
5. Verify that the equipment code, program protect, and unit select switches/jumpers are set to their normal operating positions on the adapter. {Refer to section 4J, volumne 1, for location and setting.}
6. Position the drive interface in the processor chassis in its assigned position so that the component side is facing left.
7. Seat the drive interface by applying firm pressure at its top and bottom. The drive interface is properly installed only when fully seated. {If available, an insertion tool may be used.}
8. Replace the extractor tool and the cover plate, and close the access panel.
9. Press the MASTER CLEAR switch on the operators panel.
10. Continue the DDLT testing sequence.

J27 CONTROL UNIT LOGIC BOARD {POSITIONS 07 to 29} REPLACEMENT

To replace the control unit logic boards in positions 07 through 29, perform the following:

1. Turn off the Controller power by setting the controller circuit breaker to the off position {inside the cabinet below the control unit.}
2. Release the latches on the front panel of the control unit. The latches are located inside the handles of the panel.
3. Pull the control unit out on its sliding rails.
4. Remove the cover from the logic chassis {figure 6J-26}.
5. Refer to logic board placement diagram {6J-27} for the location of the logic board to be replaced.
6. Remove the board by lifting the two tabs at the outer edges of the board and pulling them straight out.
7. Insert the new board into the guides. Press the board into position until it is seated on the back panel connector.
8. Push the control unit in on its sliding rails while depressing the two stops at the center of the rails after the fault is isolated.
9. Restart with step 5 after every board insertion.

J28 CONTROL UNIT MAINTENANCE PANEL REPLACEMENT

To replace the control unit maintenance panel {figure 6J-28}, perform the following:

1. Turn off the CONTROLLER POWER switch on the control unit {inside the cabinet below the control unit.}
2. Release the latches on the front of the control unit. The latches are located inside the handles of the panel.

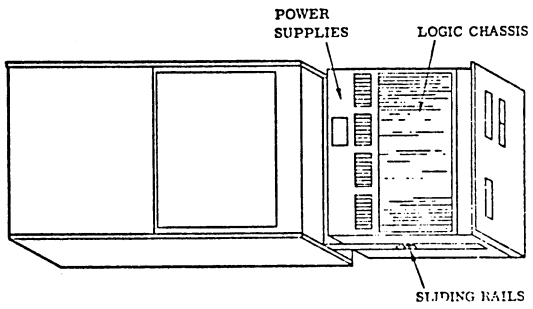

Figure 6J-26. Control Unit Physical Characteristics

CHASSIS MAP

KEY | FUNCTIONAL NAME / CROSS REFERENCE NUMBER (S) | MODULE TYPE IDENTIFIER

LOGIC CHASSIS

01	NOT USED	
02	NOT USED	
03	NOT USED	
04	NOT USED	
05	NOT USED	
06	NOT USED	
07	CONTROL INTERFACE XMTRS/RCVRS NO. 1 071-073	5BFX
08	DUAL ACCESS CONTROL 081-083	5BDX
09	CONTROL INTERFACE XMTRS/RCVRS NO. 2 091-093	5BFX
10	CONTROL INTERFACE BUS IN/OUT CONTROL 101-104	5BAX
11	CONTROL INTERFACE TAG CONTROL NO. 1 111-115	ABBX
12	CONTROL INTERFACE TAG CONTROL NO. 2 121-123	4BCX
13	COMMAND CHECKING 131-135	5BEX
14	SERDES CONTROL 141-145	5BLX
15	READ/WRITE CONTROL 151-156	CBMX
16	ECC CONTROL 161-164	ABVX
17	READ PLD 171-	ABNX
18	POLLING NO. 1 181-184	5BPX
19	POLLING NO. 2 191-196	ABQX
20	ECC NO. 1 201-206	5BSX
21	ECC NO. 2 211-216	5BTX
22	ECC NO. 3 221-223	5BUX
23	DRIVE A-CABLE XMTRS/RCVRS 231-236	ABJX
24	DRIVE COMMAND BUS CONTROL 241-244	5BWX
25	DRIVE COMMAND TAG CONTROL 251, 252	5BMX
26	DRIVE CONTROL 261, 265	5B6X
27	DRIVE B-CABLE XMTRS/RCVRS NO. 1 271-279	ABKX
28	NOT USED	
29	DRIVE B-CABLE XMTRS/RCVRS NO. 2 291-299	ABKX
30	MAINTENANCE PANEL 301-303	4BZX

CARD SIDE OF CHASSIS

POWER SUPPLY

PWR INTERRUPT & INIT CLR DETECTOR 401, 402	AXLN

Figure 6J-27. Control Unit Logic Board Chassis Map

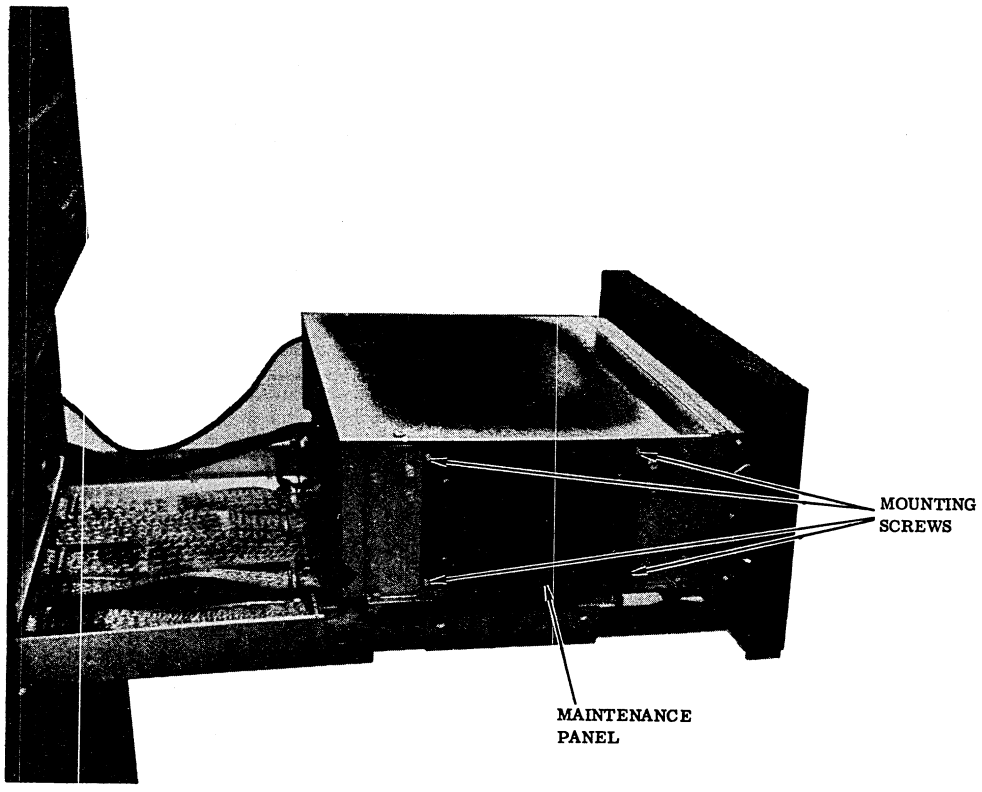

Figure 6J-28. Control Unit Maintenance Panel

3. Pull the control unit out on its sliding rails.
4. Remove the two outboard mounting screws from the panel cover.
5. Remove the four self-tapping screws that secure the maintenance panel to the chassis.
6. Remove the panel and assembly by lifting the two tabs at the outer edges of the printed circuit board and lifting the entire assembly out of the logic cage.
7. Separate the panel from the printed circuit board assembly by removing the four inboard mounting screws.
8. Install the panel on a new printed circuit board assembly and replace the entire assembly in the logic chassis.
9. Restore the control unit to its original condition by reversing steps 1 through 4 of this procedure.

J29 CONTROL UNIT 5 V dc POWER SUPPLY REPLACEMENT

To replace the control unit 5 V dc power supply, perform the following:

1. Turn off the controller power switch on the control unit (inside the cabinet below the control unit).
2. Disconnect the power cord (in the rear of the cabinet) from site power.
3. Pull the control unit out on its sliding rails and remove the cover from the power supply by removing the six screws (figure 6J-29).
4. Identify and remove the wires from the faulty power supply (figure 6J-29).
5. Remove the four mounting screws from the base of the power supply.

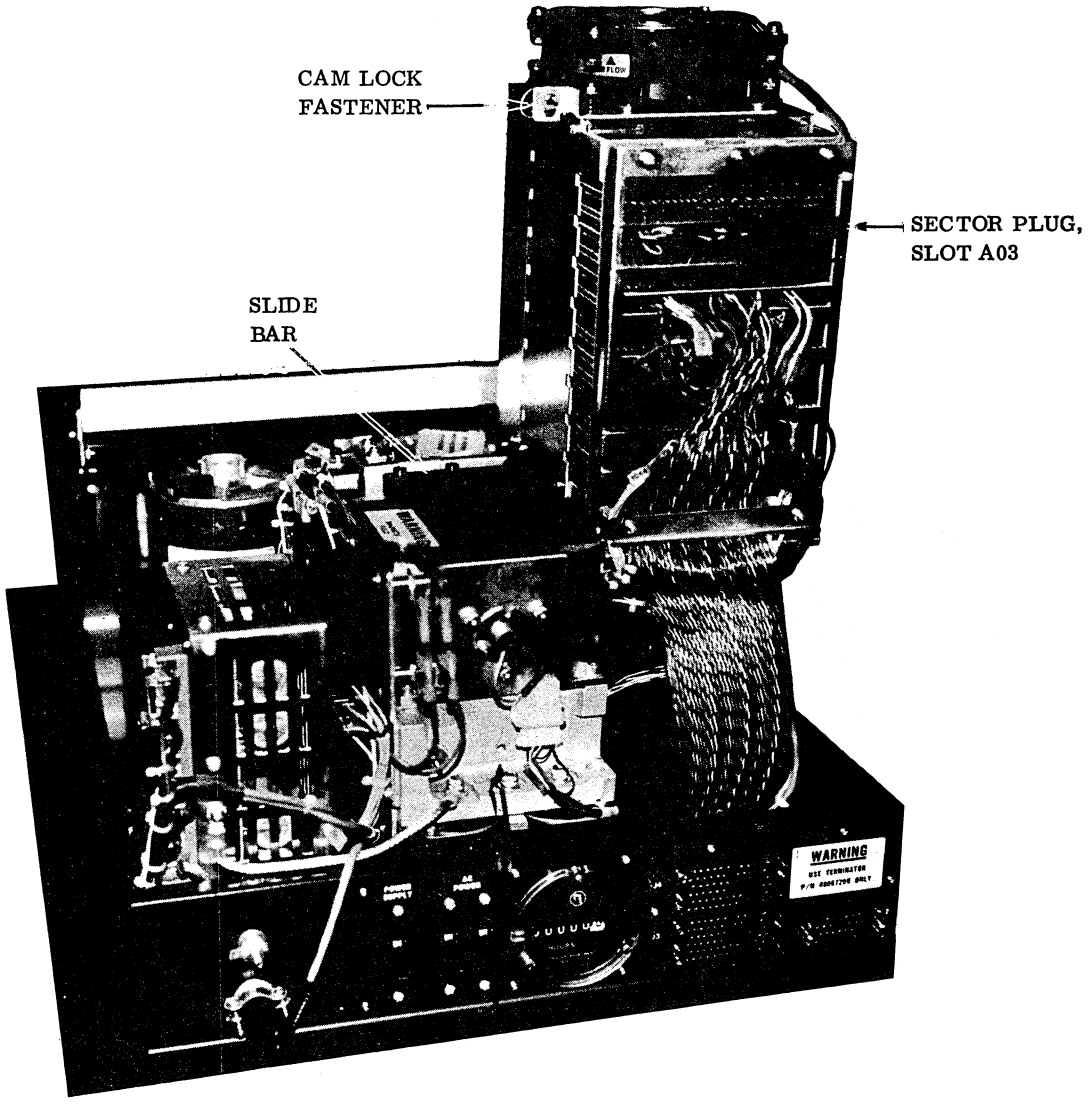

Figure 6J-30. Storage Module Drive Sector Plug.

6. Replace the faulty power supply with a new one. Install the mounting screws and wires exactly as before.

7. Restore the control unit to original condition by reversing steps 1 through 3 of this procedure.

J30 CONTROL UNIT CIRCUIT BREAKER REPLACEMENT

To replace the control unit circuit breaker, perform the following:

1. Turn off the controller power switch on the control unit (inside the cabinet below the control unit).

2. Disconnect the power cord (in rear of cabinet) from site power.

3. Pull the control unit out on its sliding rail and remove the cover from the power supply.

4. Remove the four mounting screws on the +5 V dc power supply, release the cable straps on the front of the power supply, and lay the power supply back to expose the circuit breakers underneath (figure 6J-29).

5. Identify and snap off the wires of the faulty circuit breaker.

6. Remove the knurled nut from the front of the circuit breaker.

7. Remove the faulty circuit breaker and install a new one.

8. Restore the control unit to its original condition by reversing steps 1 through 6 of this procedure.

J31 CONTROL UNIT COOLING FAN REPLACEMENT

To replace the control unit cooling fan, perform the following:

1. Turn off the power switch on the control unit (inside the cabinet below the control unit).

2. Release the latches on the front panel of the control unit. The latches are located inside the handles of the panel.

3. Pull the control unit out on its sliding rails.

4. Remove the six screws on the side of the front panel and take off the complete panel assembly to expose the fan assembly.

5. Take out the four mounting screws and remove the fan assembly.

6. Remove the faulty fan from the fan assembly and replace with a new one. (Four screws and a snap-on power cable).

7. Reinstall the fan assembly and front panel.

8. Restore the control unit to its original condition by reversing steps 1 through 5 of this procedure.

J32 CONTROL UNIT AIR FILTER CLEANING

This procedure should be performed as a regularly scheduled preventive maintenance function as outlined in table 6-1. To clean the air filter, perform the following:

1. Press the latch on the bottom door at the front of the cabinet to open the door.

2. Remove the air filter on the bottom of the cabinet.

3. Clean both sides of the filter using a vacuum cleaner.

4. Check that the filter has been properly cleaned by holding the filter up to the light. No obvious dark areas should be seen. If the filter cannot be cleaned properly, replace it with a new one.

5. Reinstall the filter in the cabinet and close the door.

J33 DRIVE INTERFACE SIGNAL CABLE CHECK

To check the drive interface signal cable, perform the following:

1. Remove the right rear panel of the processor cabinet for processor 1 or the left front panel for processor 2.

2. Inspect the signal cables to ensure that the connectors are fully seated on the backplane pins. Refer to figure 5J-1, volume 1, for correct placement.

3. Replace the assembly panels removed.

J34 CONTROL UNIT POWER FAIL DETECT CARD REPLACEMENT

To replace the control unit power fail detect card, perform the following:

1. Turn off control unit power (procedure J29).

2. Disconnect the power cord from site power.

3. Release the latches on the front panel.

4. Pull the control unit out on its sliding rails until the power supply unit is fully exposed.

5. Remove the four self-tapping screws on the power supply cover. Remove the cover.

6. Identify and remove the power fail detect card. Refer to figure 6J-29.

7. Install a new power fail detect card.

8. Restore the control unit to its original condition by reversing steps 1 through 5 of this procedure.

J35 SECTOR PLUG REPLACEMENT

To replace the storage module drive sector plug, perform the following:

1. Turn off storage module drive power (procedure J2).

2. Raise the cabinet cover and lock into the upright position.

3. Release the cam lock fastener and raise the logic cage to the upright position. Lock the logic cage in place with the slide bar located on top of the voice coil magnet assembly (figure 6J-30).

4. Locate and remove the sector plug on the back of the logic cage slot A03.

5. Install a new sector plug.

6. Return the storage module drive to its original position by reversing items 1 through 3 of this procedure.

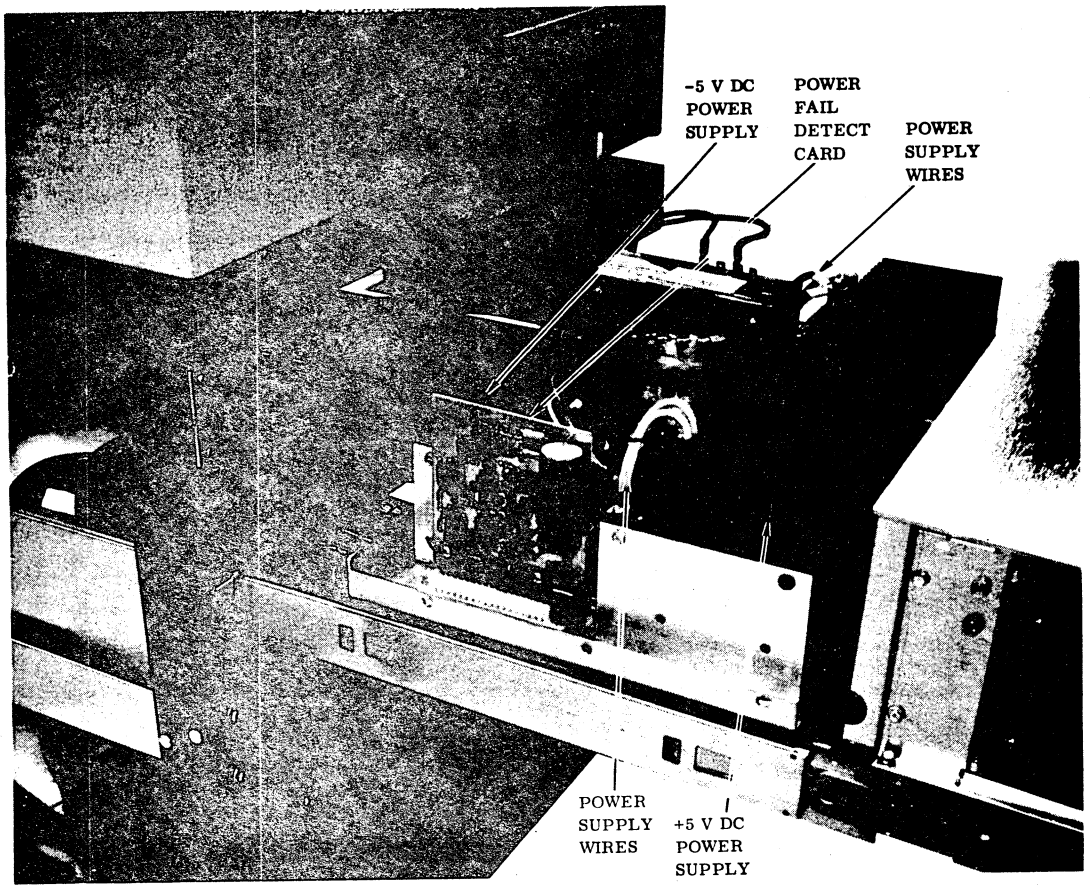

Figure 6J-30. Control Unit Power Supply Assembly

J36 CHECKING AUTOLOAD CAPABILITY

To check the autoload perform the following:

1. Record the DDLT sheet and action or condition.
2. Run SMD2A, the ODS level II diagnostic on the autoload drive by following table 6-57.
3. Press the MASTER CLEAR button on the operator's panel.
4. Press the AUTOLOAD button on the operator's panel.
5. Press the ESC key on the keyboard.
6. Enter the following on the keyboard:

   K71002800:
7. Enter the following on the keyboard:

   L0A00: E000: 0708: 02FE: 18FF:
8. Enter the following on the keyboard:

   K0000: I: J14: K:
9. The following should be displayed:

   K0X0C {X= do not care}
10. This is the SMD interface status following the autoload. If the status does not agree with the above, return to the DDLT testing action 13, sheet 4 of table 6-57.

    Examples of common failure status:

    8x05
    Cx14
    4x14
11. If the status is correct execute the next condition or action of the DDLT testing.

J37 SMD ADAPTER TO CONTPOL UNIT CABLE REPLACEMENT

1. Open the front door of the SMD base cabinet containing the control unit.
2. Power off the control unit by setting the circuit breaker to the off position.
3. Perform the SMD power turn off procedure, J2.
4. Power off the processor. {Procedure A2}
5. Remove the rear cabinet skin from the processor.
6. Disconnect the two printed circuit paddle boards from the processor backplane.
7. Remove the two "u" clamps securing the cable to the cable entry tray.
8. Withdraw the SMD adapter cable.
9. Remove the BUS IN and BUS OUT cables from the control unit connector panel.
10. Open the rear door to the SMD base cabinet and remove the cables.
11. Install a new cable by performing steps 1 through 10 in reverse order.

J38 PROCEDURE FOR SMD READ/WRITE HEAD ARM ALIGNMENT

NOTE: This procedure can only be performed by Tech Support.

Check and adjustment for the SMD (BJ701) using ODS (Operational Diagnostic System) test SMDUT and a Head Alignment Kit (P/N 77440500) on a CYBER 18 system:

Reference documentation required:

1. BJ701 HMM 83311300
2. ODS Reference Manual 96760410.
3. Head Alignment Kit and Procedure P/N 77440500

Alignment Check:

1. Load ODS Test SMDUT. CRT should display:
   SMDUT executing
   SMDUT suspended BOT
2. At the CRT enter:
   "GO" followed by a carriage return.
   CRT should display:
   SMDUT Section 0002
   Install Heat Alignment Kit
   Install CE Disk Pack
   Change LU and density parameters if required.
   SMDUT suspended self.
3. A. Power off SMD and install Head Alignment Kit and CE pack.
   B. Power on SMD and perform thermal stabilization as required by BJ701 HMM.
   C. At the CRT, change SMDUT run parameter Word 9 to match logical unit of drive to be tested if required. Test is preset to Logical Unit "0".

NOTE

Due to a problem in the pre-release version of test SMDUT, a seek time range error will be reported at various times throughout the test. This is an informative message only and will not cause an error halt. Actual time reported should = $0010.

4. At the CRT enter:
   "GO" followed by a carriage return.
   A. Once the operator has entered "GO" followed by a carriage return, the section selects the specified drive, issues an RTZ command, and then performs seeks between cylinders 240 and 245 for 30 seconds. At the completion of this, the section issued an RTZ command, reseeks to cylinder 245 outputs the following message and suspends itself.

      CHECK SERVO ADJ.
      SMDUT SUSPENDED SELF

NOTE

When using Head Alignment Card, insure that:

1. Power indicator is "ON"
2. Input and bad track indicators are "OFF"
3. Mode indicator is "ON" only when checking Servo Head.
4. S3 is set to X1 when calculating offset.

B. Calculate Servo Head offset. Reference BJ701 HMM for procedure. If Servo Head offset does not meet requirements, take corrective action and restart the test.

5. At the CRT enter:

"GO" followed by a carriage return.

A. The drive will do a RTZ seek and then a seek to cylinder 245. The CRT will then display:

HEAD 0

SMDUT SUSPENDED SELF.

B. Calculate and make note of head 0 offset. Reference BJ701 HMM for procedure.

6. At the CRT enter:

"GO" followed by a carriage return.

A. The CRT will display:

HEAD 1

SMDUT SUSPENDED SELF.

B. Calculate and make note of HEAD 1 offset.

7. At the CRT enter:

"GO" followed by a carriage return.

A. The CRT will display:

HEAD 2

SMDUT SUSPENDED SELF.

8. At the CRT enter:

"GO" followed by a carriage return.

A. The CRT will display:

HEAD 3

SMDUT SUSPENDED SELF.

B. Calculate and make note of HEAD 3 offset.

9. At the CRT enter:

"GO" followed by a carriage return.

A. The CRT will display:

HEAD 4

SMDUT SUSPENDED SELF

B. Calculate and make note of HEAD 4 offset.

10. At the CRT enter:

"GO" followed by a carriage return.

The CRT will display:

INSURE THAT LOCKING PIN HAS BEEN REMOVED.

PERFORM TORQUE ADJ. IF REQD.

SMDUT SUSPENDED SELF.

11. Check all noted head offsets to insure they meet specification set by BJ701 HMM. If any data head does not meet these specifications or a data head or Servo Head is replaced go to adjustment section item 13.

If not:

A. At the CRT enter:

"GO" followed by a carriage return. The CRT will display:

CHANGE PARAMETER WORD D TO 0 TO STOP.

SMDUT SUSPENDED SELF

B. At the CRT enter:

D, 0 followed by a carriage return.

"GO" followed by a carriage return.

The CRT will display:

SMDUT SUSPENDED ENDS

C. At the CRT enter:

"GO" followed by a carriage return.

The CRT will display:

SMDUT COMPLETED XXXX PASSES.

SMDUT SUSPENDED SELF.

12. Prepare drive for on-line operation.

A. Remove CE pack

B. Power off drive and remove Head Alignment Kit.

C. Power up drive and install scratch pack.

D. Run 1 pass of SMDDA, SMDCU, SMD01 and SMD2A.

ADJUSTMENTS

13. Assumption:

A. Entry is made from number 11 of alignment check section.

B. Drive has been stopped and head mounting screws of heads to be adjusted are loosened to a torque of 4±1/2 in lbs.

14. Start drive and insure heads are loaded.

15. At the CRT enter:

A. 1, SCE followed by a carriage return. (set repeat subsection bit)

B. "GO" followed by a carriage return.

The drive will perform a RTZ and seek to Cylinder 254

CRT will display:

HEAD "0"

SMDUT SUSPENDED SELF

16. Each succeeding "GO" followed by a carriage return entered at the CRT will advance the head selection and CRT will display head message and test will suspend itself.

17. Select head to be adjusted.

18. Ground connector Pin A04-03B (on cylinder) to prevent a seek error from attempting to reposition the carriage, per Service Bulletin SB3116.

19. Install carriage locking pin and do head adjustment per BJ701 HMM.

WARNING

With locking pin in and Pin A04-03B grounded, do not advance test past locking pin message, stop drive or anything else that may cause carriage movement or a fuse in the drive will blow.

20. After HEAD 4 has been selected and a "GO" followed by a carriage return has been entered at CRT, the CRT will display the locking pin message.

A. Remove locking pin

B. Remove ground from A04-03B

C. Press start switch to stop drive motor and unload heads.

D. Torque head clamp screws to 12± 1/2 in lbs.

E. Press start switch to start drive motor and load heads.

21. Starting at Step 2B, repeat steps through 7B and readjust any head requiring it, per BJ701 HMM.

22. CRT should be displaying locking pin message.

    At the CRT enter:

    A. 1, 4CE followed by a carriage return.

    B. "GO" followed by a carriage return.

    CRT will display:

    CHANGE PARAMETER WORD D TO 0 TO STOP.

    SMDUT SUSPENDED SELF.

23. At the CRT enter:

    "GO" followed by a carriage return.

    The section will then reselect the drive and perform a RTZ then seek between Cylinders 240 and 245 for 30 seconds. At the completion of this time period the operator is instructed to unload and load the heads on the drive twice. To accomplish this the section prints out the following message and waits for the appropriate change in drive status 2 four times:

    PRESS AND RELEASE START BUTTON

    After the drive has come ready for the second time the section will perform a RTZ and a seek to cylinder 245 and the CRT will display:

    HEAD "0"

    SMDUT SUSPENDED SELF.

24. Check and adjust heads requiring it per BJ701 HMM by repeating steps 16 through 20B.

25. CRT should be displaying locking pin message.

    A. At the CRT enter:

    "GO" followed by carriage return.

    CRT will display:

    CHANGE PARAMETER WORD D TO 0 TO STOP

    SMDUT SUSPENDED SELF.

    B. At the CRT enter:

    D, 0 followed by a carriage return

    "GO" followed by a carriage return

    The CRT will display:

    SMDUT SUSPENDED ENDS

    C. At the CRT enter:

    "GO" followed by a carriage return.

    The CRT will display:

    SMDUT COMPLETED XXXX PASSES

    SMDUT SUSPENDED SELF.

26. Prepare drive for on-line operation.

    A. Remove CE pack.

    B. Power off drive and remove Head Alignment Kit.

    C. Power up drive and install scratch pack.

    D. Run 1 pass of SMDDA, SMDCU, SMD01 and SMD2A.

This page intentionally left blank.

FLEXIBLE DISK DRIVE PROCEDURES

CONTENTS

Procedure		Page
K1	Power Turn-On	6K-1
K2	Power Turn-Off	6K-1
K3	Diskette Loading	6K-1
K4	Diskette Removal/Handling Recommendations	6K-1
K5	Power Supply Voltages Check	6K-1
K6	24 V dc Power Supply Replacement	6K-3
K7	5 V dc Power Supply Replacement	6K-3
K8	Head Cleaning	6K-3
K9	Flexible Disk Drive Replacement	6K-4
K10	Flexible Disk Drive Controller Replacement	6K-4

Figure		Page
6K-1	Disk Installation	6K-2
6K-2	Flexible Disk Drive dc Power Supplies Test Points	6K-4
6K-3	Flexible Disk Drive Mounting	6K-5

96768683 - 01

K1 POWER TURN-ON

The flexible disk drive gets its ac power from the processor power distribution system, which is controlled by the POWER ON/OFF switch located on the cabinet to the right of the operators panel.

To turn on the flexible disk drive, perform the following:

1. Set the cabinet POWER ON/OFF switch to the ON position. The spindle will begin to rotate.
2. Open the door and insert the diskette (procedure K3).
3. Close the door. The drive will engage the diskette and it will start to turn. Upon command from the processor, heads will load.
4. If more than one flexible disk drive is included in the system, select the desired flexible disk drive by pressing the UNIT REV. switch on the processor operators panel. When the switch is off, unit 0 is selected. When the switch is on, unit 1 is selected.
5. The flexible disk drive is now ready for use.

K2 POWER TURN-OFF

The flexible disk drive ac power is supplied from the processor power distribution system which is controlled by the POWER ON/OFF switch located on the cabinet to the right of operators panel. To turn off power to the flexible disk drive, therefore, requires that the processor power also must go off.

To turn off the flexible disk drive, perform the following:

1. Open the flexible disk drive door and remove the diskette, if present. If there is more than one flexible disk drive in the system, remove the diskette from the other flexible disk drive (procedure K4).
2. Press MASTER CLEAR on the processor operator panel.
3. Set the POWER ON/OFF switch on the cabinet to OFF.

K3 DISKETTE LOADING

To load the diskette, perform the following:

1. Apply ac/dc power to the unit (procedure K1).
2. Open the flexible disk drive door.
3. Remove the diskette from the storage envelope as shown in figure 6K-1.
4. If the diskette is to be write protected (on units with write protect circuitry), be sure the write protect slot is uncovered, as shown in figure 6K-1.
5. Carefully slide the diskette into the flexible disk drive, as shown, until the jacket is solidly against the stops.
6. Carefully close the unit door.
7. Protect the empty storage envelope from liquids, dust, and metallic materials.

K4 DISKETTE REMOVAL/HANDLING RECOMMENDATIONS

To remove the diskette, perform the following:

1. Open the flexible disk drive door to stop disk rotation and disengage the spindle.
2. Remove the disk from the flexible disk drive and put it in its storage envelope. Follow the recommended handling procedure below.

Since the recorded surface contains vital information, reasonable care should be exercised in its handling. Longer disk life and trouble free-operation results if the following recommendations are followed:

1. Do not use a writing device that deposits flakes (i.e., lead of grease pencils) when writing on the jacket label.
2. Do not fasten paper clips to the jacket edges.
3. Do not touch the surface exposed by the jacket slot.
4. Do not clean the diskette in any manner.
5. Keep the diskette away from the magnetic field and from ferromagnetic materials that may be magnetized.
6. Return the diskette to the envelope when removed from the flexible disk drive.
7. Protect the diskette from liquids, dust, and metallic substances at all times.
8. Do not exceed following the storage environmental conditions:

Temperature	50, to 125,F (10, to 52,C)
Relative Humidity	8 to 80%
Maximum wet bulb	85,F (29.4,C)

9. Diskette should be stored when not in use.

K5 POWER SUPPLY VOLTAGES CHECK

To check the power supply voltages, refer to figure 6K-2 for test points, and perform the following:

1. Grasp the bottom of the front panel on the processor cabinet and remove it by pulling it out.
2. Release the latches and pull the equipment mounting frame forward.
3. Remove the five mounting screws from the base of the cover and remove the cover from the power supplies.

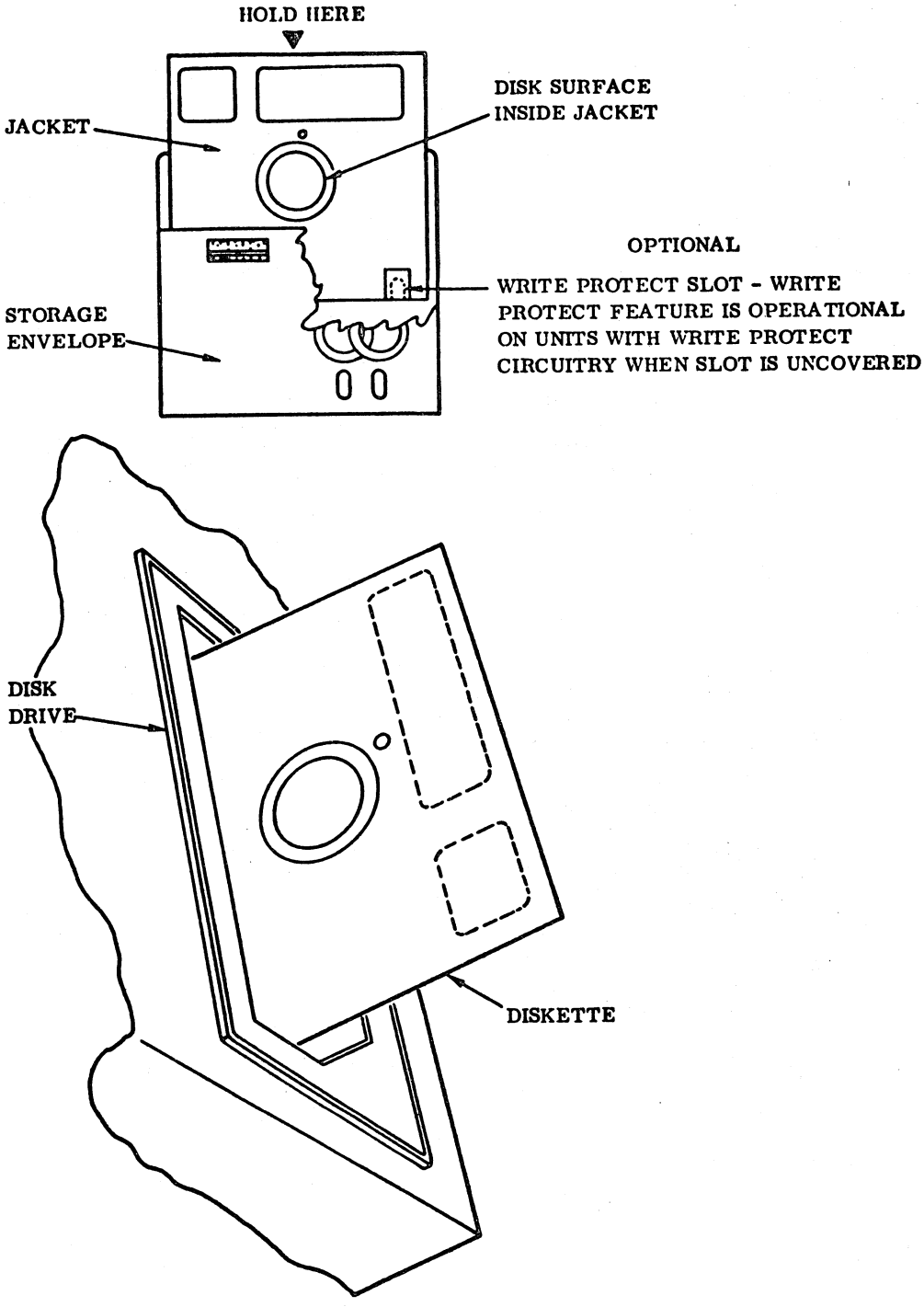

Figure 6K-1. Disk Installation

4. With a dc voltmeter set to the 30 V dc scale, place the negative lead on the RET test point and the positive lead on the +24 V dc test point. Verify that the power supply puts out +24 V dc ±10%. Make the necessary adjustments by turning the potentiometer shown. If the power supply cannot be adjusted to get proper voltage, replace the power supply (procedure K6).

5. With a dc voltmeter set to the 15 V dc scale, place the negative lead on the -5 V dc test point and the positive lead on the RET test point. Verify that the power supply puts out -5 V dc ±5%. Make the necessary adjustments by turning the potentiometer shown. If the power supply cannot be adjusted to meet the specification, replace the power supply (procedure K7).

6. Remove the meter leads and restore the mounting frame and front panel to their original positions.

K6 24 V dc POWER SUPPLY REPLACEMENT

The 24 V dc power supply is located on a mounting plate above the flexible disk drive and is exposed when the processor equipment mounting frame is released and moved forward. See figure 6K-2.

To replace the 24 V dc power supply, disconnect AC power to the processor and perform the following:

1. Remove the front panel from the processor cabinet by grasping and pulling it at the bottom.

2. Release the latches and pull the equipment mounting frame forward.

3. Remove the five mounting screws around the base of the cover and remove the cover from the power supplies.

4. Identify the wires and remove them from the power supply.

5. Remove the three mounting screws from the base of the power supply. Remove the power supply.

6. Install the new power supply in the vacated position in the same orientation as before.

7. Reconnect the wires to the power supply.

8. Restore power to the processor and test the new power supply according to procedure K5.

K7 5 V dc POWER SUPPLY REPLACEMENT

The 5 V dc power supply is located on a mounting plate above the flexible disk drive and is exposed when the processor equipment mounting frame is released and moved forward. See figure 6K-2.

To replace the 5 V dc power supply, disconnect ac power to the processor and perform the following:

1. Remove the front panel from the processor cabinet by grasping and pulling it at the bottom.

2. Release the latches and pull the equipment mounting frame forward.

3. Remove the five screws from the base of the cover and remove the cover from the power supplies.

4. Identify the wires and remove them from the power supply.

5. Remove the three mounting screws from the base of the power supply. Remove the power supply.

6. Install the new power supply in the vacated position in the same orientation as before.

7. Reconnect the wires to the power supply.

8. Restore power to the processor and test the new power supply according to procedure K5.

K8 HEAD CLEANING

To clean the read/write head on the flexible disk drive, perform the following:

1. Remove the flexible disk drive according to procedure K9.

2. Remove the cover from the flexible disk drive.

3. Clean the head as outlined below:

CAUTION

Do not smoke while cleaning. Do not touch a head face with fingers. Do not leave residue or lint on the head faces. Trapped residual particles can result in the loss of a head and/or a scored disk.

   a. Use lint-free gauze to lightly drybuff the head face. Cleaning is completed if deposits are removed.

   b. If oxide deposits were not removed in step a, use dry gauze to lightly buff the head face. Dampen (do not soak) gauze with head cleaning solution (91% isoprophyl alcohol) and wipe the head face.

4. Replace the cover on the flexible disk.

5. Reinstall the flexible disk drive according to procedure K9.

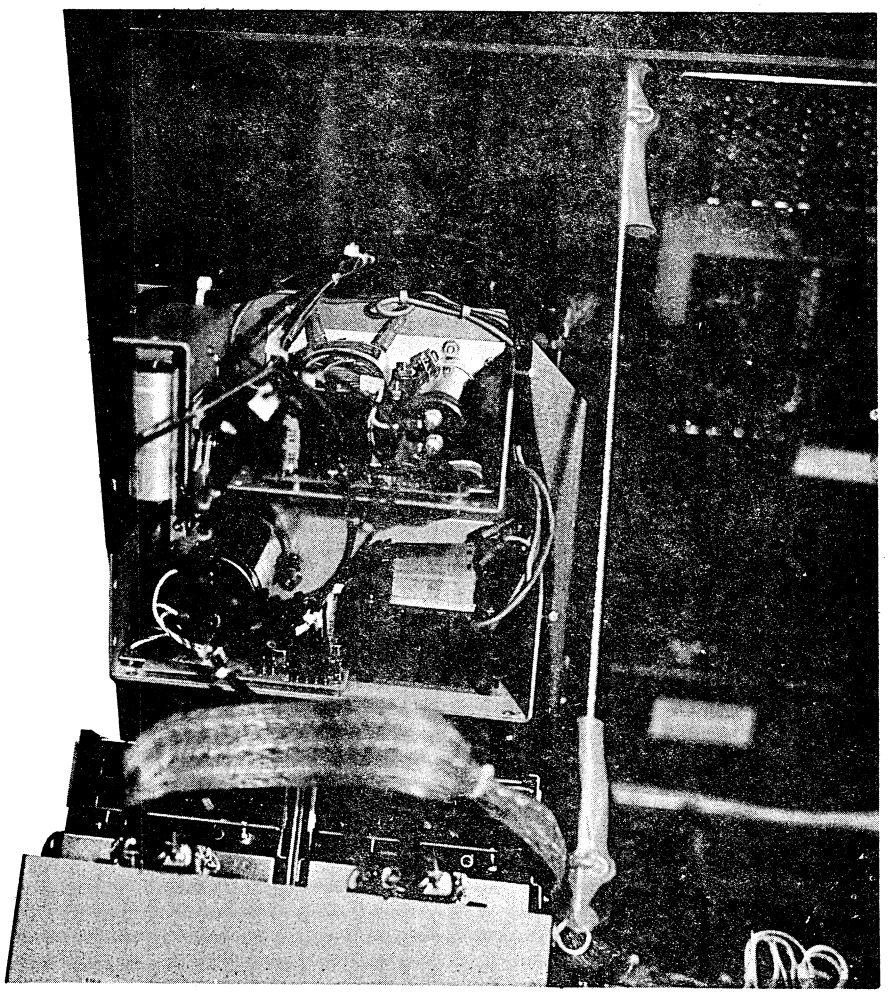

Figure 6K-2. Flexible Disk Drive dc Power Supplies Test Points

K9 FLEXIBLE DISK DRIVE REPLACEMENT

To replace the flexible disk drive, perform the following:

1. Remove the diskette from the drive, if present.
2. Remove the front cover from the processor cabinet.
3. Release the latches and lower the equipment mounting frame.
4. Note the location of the cables and disconnect them from the drive (figure 6K-3).
5. Remove the bottom mounting screw from the drive (figure 6K-3).
6. Raise the equipment mounting frame and remove the top mounting screw from the drive (figure 6K-3).
7. Pull the drive forward, remove the drive from its mounting bracket, and replace it with a new drive.
8. Install the mounting screws.
9. Reconnect the cables to their proper connectors on the new drive.
10. Test the new flexible disk drive according to DDLT requirements.

K10 FLEXIBLE DISK DRIVE CONTROLLER REPLACEMENT

1. Remove the diskette from the flexible disk drive, if present.
2. Remove the right side panel from the processor cabinet.

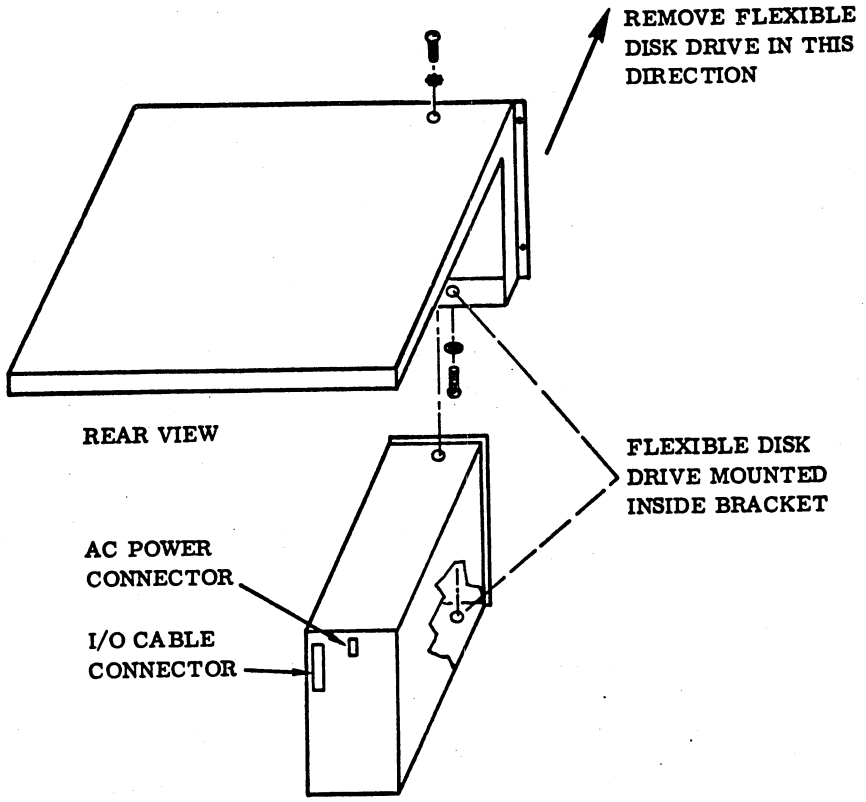

Figure 6K-3. Flexible Disk Drive Mounting

3. Remove the cover panel from the processor logic chassis.

4. Use the extractor tool attached to the inside of the panel and remove the adapter from the logic chassis. Refer to table 4A-3, volume 1, for location.

5. Verify that the equipment code and function switches are set to their normal operating positions on the new controller. Refer to figure 4K-2, volume 1, for switch location and table 4K-2 for switch settings.

6. Position the new controller in its assigned position within the processor logic chassis with the component side facing left.

7. Seat the controller into its backplane connector by applying firm pressure at the top and bottom of the controller.

8. Replace the extractor, the cover panel, and the cabinet side panel.

KEYBOARD DISPLAY TERMINAL PROCEDURES 6L

See Keyboard Display Terminal Hardware Maintenance Manual 62957400 for all procedures which relate to the Keyboard Display Terminal.

PROCEDURE	CONTENTS
M1	MLIA Board replacement
M2	Multiplexer Subsystem Card Removal
M3	Multiplexer Subsystem Card Installation
M4	ACLA Disable
M5	Bypass a Loop Multiplexer Card Cage (Two cage system)
M6	Check +5, +12, and -12 Voltages at Loop Multiplexer Cage
M7	Loop Multiplexer Cable Replacement (Two cage system)
M8	ACLA Address Change To Unused Address
M9	Check Power Indicators on MLIA Cards
M10	Check Loop Multiplexer Power Switch
M11	Check an ACLA Enable Switch
M12	+5Vdc Power Supply Check
M13	+12 Vdc Power Supply Check
M14	-12 Vdc Power Supply Check
M15	Power Supply Replacement

PROCEDURE M1

MLIA BOARD REPLACEMENT

To replace the MLIA boards, perform the following:

1. Turn the power off (procedure A4).

2. Remove the left side panel for access to processor 2. (Figure 6A-21)

3. Remove the plenum cover of the CPU chassis by rotating the two captive fasteners one turn counterclockwise.

4. Locate the MLIA board for removal. (Figure 6M-10)

5. Using card extractor tool (CDC part number 88911900) attached to the plenum cover, slide the MLIA board out of the chassis and place it on a flat surface.

6. Position the replacement board vertically in the front of the chassis with the component side facing left.

7. Slide the board carefully into the chassis. Seat the board into the connector by applying firm thumb pressure at the upper and lower corners of the board.

8. Replace the plenum cover and secure the side panel on the cabinet.

9. Turn the power on (procedure A3).

PROCEDURE M2

MULTIPLEXER SUBSYSTEM CARD REMOVAL

To remove a card in the Multiplexer Subsystem Loop Multiplexer Cage, perform the following:

1. Open the lower front door (labeled "I/O Unit") of the Magnetic Tape Transport Cabinet. (fig. 6M-1)

2. Locate the card to be replaced (CLA or Loop MUX). (fig. 6M-4)

3. a. If the card to be replaced is a CLA set both CLA1 and CLA2 enable switches to OFF. (fig. 6M-6)
   b. If the card to be replaced is a Loop Mux, set the PWR switch to OFF. (fig. 6M-5)

4. Remove the upper and lower cable connectors from the card connectors (labeled CLA1 and CLA2 on CLAs and J1 and J2 on Loop MUXs), taking care not to interchange the connectors. (Replace only one card at a time.)

5. Using both ejectors (fig. 6M-6), carefully unplug the card from its connector at the rear of the card cage.

6. Carefully remove (if necessary) the card from its slot in the card cage.

   NOTE: If the card is being replaced, go to Procedure M3.

PROCEDURE M3

MULTIPLEXER SUBSYSTEM CARD INSTALLATION

To install a card in the Multiplexer Subsystem Loop Multiplexer Card Cage, perform the following:

1. Open the lower front door (labeled "I/O Unit") of the Magnetic Tape Transport Cabinet (fig. 6M-1).

2. Locate the slot into which the card is to be installed (fig. 6M-4).

3. a. If the card to be installed is a Loop Mux, it can only be installed in one of the two right most slots in the cage. (fig. 6M-4)

   b. If the card to be installed is a CLA, it can be installed in any of the remaining 16 available slots. (fig. 6M-4)

4. a. If the card to be installed is a CLA, set both CLA1 and CLA2 enable switches to OFF (fig. 6M-6).

   b. If the card to be installed is a Loop Mux, set the PWR switch to OFF (fig. 6M-5).

5. Position the card vertically so the two connectors (CLA1 and CLA2 on CLAs; J1 and J2 on Loop Mux's) on the card handle are at the bottom and the thumbwheel switches are at the top with the component side of board facing left (fig. 6M-4).

6. Insert the rear top and bottom edges of the card into the guides of the selected slot, making certain the card is perfectly vertical and not cross slotted.

7. Slide the card into the card cage, applying light pressure on the card handle until the edge pins on the card engage with the back panel connectors. Press firmly on the card handle until the edge pins slip into the card cage connector.

8. If the card being installed is a CLA, set the thumbwheel switches to the desired address (fig. 6M-6). The address is determined by system configuration. CARE SHOULD BE TAKEN TO ENSURE NO TWO CLAs HAVE THE SAME ADDRESS.

9. Attach the proper cable connectors to the two connectors on the card (CLA1 and CLA2 on CLAs; J1 and J2 on Loop Mux's) taking care to ensure the connectors are not interchanged.

10. a. If the card being installed is a CLA, set the CLA1 and CLA2 enable switches to the CLA1 and CLA2 positions, respectively (fig 6M-6).

    b. If the card being installed is a Loop Mux, set the PWR switch to ON (fig. 6M-5).

PROCEDURE M4

ACLA DISABLE

To disable a CLA, perform the following:

1. Open the lower front door (labeled "I/O Unit") of the Magnetic Tape Transport Cabinet (fig. 6M-1).

2. Locate the CLA which is to be disabled (fig. 6M-1).

3. On the CLA which is to be disabled, set the appropriate (CLA1 or CLA2) enable switch to OFF (fig. 6M-6).

PROCEDURE M5

BYPASS A LOOP MULTIPLEXER CARD CAGE (TWO CARD CAGE SYSTEM)

To bypass a Multiplex Subsystem Card Cage in a two card cage system, perform the following:

1. Open the door to the cabinet containing the two Multiplex Subsystem Card Cages.

2. Locate the Loop Mux card in the card cage that is to be bypassed (fig. 6M-3).

3. Set the oower switch, labeled PWR, on this Loop Mux card to OFF (fig. 6M-5).

4. Disconnect the cable connectors from Loop Mux card connectors J1 and J2 (fig. 6M-5).

5. Connect the two cable connectors, disconnected in step 4, together.

PROCEDURE M6

CHECK +5, +12, and -12 VOLTAGE AT LOOP MULTIPLEXER CAGE.

To check the three required voltages at the Loop Multiplexer Cage, perform the following:

1. Open the rear door of the Magnetic Tape Transport Cabinet (fig. 6M-1).

2. To check +5V, set a multimeter to a dc voltage range capable of clearly displaying +5Vdc.

3. a. Connect the negative lead of the multimeter to the bus bar labeled GND (fig. 6M-11) at the bottom rear of the Loop Multiplex Card Cage.
   b. Connect the positive lead of the multimeter to the bus bar labeled +5V (fig. 6M-11) at the top rear of the Loop Mux Card Cage.
   c. The meter should read +5V ± 0.25V dc. If not, see procedure A7.

4. To check +12V, set a multimeter to a dc voltage range capable of clearly displaying +12Vdc.

5. a. Repeat step 3a.
   b. Connect the positive lead of the multimeter to the bus bar labeled +12V (fig. 6M-11) at the rear of the Loop Mux Card Cage.
   c. The meter should read +12V ± 0.6Vdc. If not, see procedure A9.

6. To check -12V, set a multimeter to a dc voltage range capable of clearly displaying -12dc.

7. a. Repeat step 3a.
   b. Connect the positive lead (on meters which have no polarity reversal capability, the positive and negative meter leads should be reversed) to the bus bar labeled -12V at the rear of the Loop Mux Card Cage (fig. 6M-1).
   c. The meter should read -12V ± 0.6Vdc. If not, see procedure A9.

PROCEDURE M7

LOOP MULTIPLEXER CABLE REPLACEMENT (TWO CARD CAGE SYSTEM)

To replace a cable between the Loop Multiplexer cards, perform the following:

1. Open the door to the cabinet containing the two Multiplex Subsystem Card Cages.

2. Locate the two Loop Mux cards and set the power switch labeled PWR on each card to OFF (fig. 6M-5).

3. Locate the cable which runs between J1 on one Loop Mux card to J2 on the other Loop Mux card (fig. 6M-4).

4. Remove the cable connectors at each end of this cable from the corresponding Loop Mux card connector.

5. Install the replacement cable in its place and secure the connectors at each end with the screws provided.

PROCEDURE M8

ACLA ADDRESS CHANGE TO UNUSED ADDRESS

To change the address on a CLA, perform the following:

1. Open the lower front door (labeled "I/O Unit") of the Magnetic Tape Transport Cabinet (Fig. 6M-1).

2. Locate the CLA which has a thumbwheel address which must be changed (fig. 6M-4). Note whether this address is for CLA1 or CLA2.

3. Set the appropriate (as determined by step 2) CLA1 or CLA2 enable switch to OFF (fig. 6M-6).

4. Set the thumbwheels of this CLA to an address which is not used (set) on any other CLA in the card cage.

5. Set the CLA enable switch, which was set to OFF in step 3, to ON (fig. 6M-6).

PROCEDURE M9

CHECK POWER INDICATORS ON MLIA CARDS

To check the power indicators on the MLIA cards, perform the following.

1. Remove the left side panel for access to processor 2 (fig. 6A-21).
2. Remove the plenum cover of the CPU chassis by rotating the two captive fasteners one turn counterclockwise.
3. Locate the three MLIA cards (fig. 6M-10).
4. Locate the power indicator at the bottom of each card (figs. 6M-8 and 6M-9) and check to see if it is lit.
5. Replace the plenum cover and secure the side panel on the cabinet.

PROCEDURE M10

CHECK LOOP MULTIPLEXER POWER SWITCH

To check the position of the Loop Mux power switch, perform the following:

1. Open the lower front door (labeled "I/O Unit") of the Magnetic Tape Transport Cabinet (fig. 6M-1).

2. Locate the Loop Mux of concern in one of the two right most slots of the card cage (fig. 6M-4).

3. Check the position of the power switch, at the top of the card, labeled PWR. (fig. 6M-5)

PROCEDURE M11

CHECK AN ACLA ENABLE SWITCH

To check the position of a selected CLA enable switch, perform the following:

1. Open the lower front door (labeled "I/O Unit") of the Magnetic Tape Transport Cabinet (fig. 6M-1).

2. Locate the CLA card whose enable switch is to be checked (fig. 6M-4).

3. Check the position of the appropriate CLA enable switch (CLA1 or CLA2 at the top and bottom of the card, respectively)(fig. 6M-6).

M12 +5VDC Power Supply Check

To check the +5vdc Power Supply perform the following:

1- Open the rear door of the Magnetic Tape Transport Cabinet (fig 6M-1)

2- Locate the power supply at the center-right side of the cabinet (figs 6M-12 and 6M-13).

3- Set a multimeter to a dc voltage range capable of clearly displaying +5vdc.

4- Connect the negative lead of the multimeter to the large terminal labeled "V1-" (fig 6M-14). The meter should read +5 +0.25 vdc. If the voltabe is not correct adjust the potentiometer labeled "V1 ADJ (sv)"(fig 6M-14) until the correct level is attained.

5- If the power supply cannot be adjusted or if the correct level cannot be attained replace the power supply as a unit (procedure M15).

M13 +12VDC Power Supply Check

To check the +12vdc power supply perform the following:

1- Open the rear door of the Magnetic Tape Transport Cabinet (fig 6M-1)

2- Locate the power supply at the center-right side of the cabinet (figs 6M-12 and 6M-13).

3- Set a multimeter to a dc voltage range capable of clearly displaying +12vdc.

4- Connect the negative meter lead to TB2 terminal 5 (fig 6M-14), and the positive lead to TB2 terminal 2 (fig 6M-14). The meter should read +12 +0.6 vdc. If the voltage is not correct adjust the potentiometer labeled "V2 ADJ (12V)" (Fig 6M-14), until the correct level is attained.

5- If the power supply cannot be adjusted or if the correct level cannot be attained replace the power supply as a unit (procedure M15).

M14 -12VDC Power Supply Check

To check the -12vdc power supply perform the following:

1- Open the rear door of the Magnetic Tape Transport Cabinet (fig 6M-1).

2- Locate the power supply at the center-right side of the cabinet (figs 6M-12 and 6M-13)

3- Set a multimeter to a dc voltage range capable of clearly displaying -12vdc (on meters with no polarity reversal capability set to a range for displaying +12vdc)

4- Connect the negative lead (on meters with no polarity reversal capability interchange the negative and positive leads) of the meter to TB2 terminal 5 (fig 6M-14) and the positive lead to TB2 terminal 6 (fig 6M-14). The meter should read -12 ±0.6 vdc.

If the voltage is not correct, adjust the potentiometer labeled "V3 ADJ (12v)" (Fig 6M-14), until the correct level is attained.

5- If the power supply can not be adjusted or if the correct level can not be attained, replace the power supply as a unit (procedure M15).

M15 Power Supply Replacement

To replace the Loop Mux Card Cage Power Supply, perform the following:

1- Turn the power off (procedure A4) and disconnect the power cord from the primary source.

2- Open the rear door of the Magnetic Tape Transport Cabinet and locate the power supply mounted on its support bracket at the center-right side of the cabinet (figs 6M-12 and 6M-13)

3- Set a multimeter to a range capable of displaying 120VAC. Connect the negative lead of the multimeter to TB1 terminal 8 and the positive lead of the meter to TB1 terminal 9 (labeled AC and ACC respectively) (fig 6M-14).

NOTE

The multimeter should read zero voltage. If the meter does not read zero voltage, recheck the input AC power cord and disconnect it from the site power source.

4- Remove all wires from TB1, the chassis ground lug, TB2, and the Large "V1" terminals (fig 6M-14).

5- Remove the five support bracket mounting bolts along the bottom and rear edges of the bracket and remove the power supply with its support bracket from the cabinet.

6- Disconnect the power supply from its support bracket by removing the four power supply mounting bolts from the back side of the support bracket.

7- Connect the new (replacement) power supply to the support bracket with the four power supply mounting bolts removed in step 6.

8- Remount the power supply and its support bracket in the cabinet using the five support bracket mounting bolts removed in step 5.

9- Reconnect to their respective terminals the following wires only: (refer to fig 6M-14)

Location	Terminal	Description	Terminal Label
TB1	1	Small red wire	+S1
TB1	2	Small black wire	-S1
TB1	8	Black AC wire	AC
TB1	9	White AC Wire	ACC
Lugbolt	Lugbolt	Green AC wire	Chassis GND Symbol
TB2	3	Medium Black wire	-V2
TB2	5	Medium Black wire	+V3
TB2	8	Medium Black wire	-V4
V1	+	Small red wire	+
V1	-	Small black wire	-
V1	-	Medium black wire	-

NOTE

At this point the following wires should still be disconnected:

Large red wire which connects to V1+
Large black wire which connects to V1-
Medium red wire which connects to TB2 terminal 2
Medium blue wire which connects to TB2 terminal 6

10- Turn the power on (procedure A3).

11- Set a multimeter to a range clearly capable of displaying +10vdc. Connect the negative lead of the meter to the large terminal labeled "V1-" and the positive meter lead to the large terminal labeled "V1+". The meter should read no greater than +5.5vdc. If the meter reads greater than +5.5vdc, adjust the potentiometer labeled "V1 ADJ" (fig 6M-14) until a level of +5.5vdc is attained.

13- Set the multimeter to a range clearly capable of displaying +12VDC. Connect the negative lead of the meter to TB2 terminal 5 and the positive lead to TB2 terminal 2. The meter should read no greater than +13.2VDC. If the meter reads greater, adjust the potentiometer labeled "V2 ADJ" (fig 6M-14) until a level of +12VDC is attained.

13- Set the multimeter to a range clearly capable of displaying -12VDC (on meters with no polarity reversal capability interchange the meter leads). Connect the negative lead to TB2 terminal 5 and the positive lead to TB2 terminal 6. The meter should read no greater than -13.2 VDC. If the meter reads greater, adjust the potentiometer labeled "V3ADJ" (fig 6M-14) until a level of -12VDC is attained.

14- Turn the power off (procedure A4).

15- Connect the large red wire to the large terminal labeled "V1+" and the large black wire to the large terminal labeled "V1-". Ensure that the terminal nuts are tightened and a good connection has been made.

16- Connect the medium size red lead to TB2 terminal 2 and the medium size blue lead to TB2 terminal 6. (The power supply wiring should now look like (fig 6M-14).

17- Turn the power on (procedure A3).

18- Perform procedures M12, M13 and M14.

NOTE

If in performing any of the above procedures the power supply can not be adjusted to the proper, specified level it may be necessary to call the next level of support.

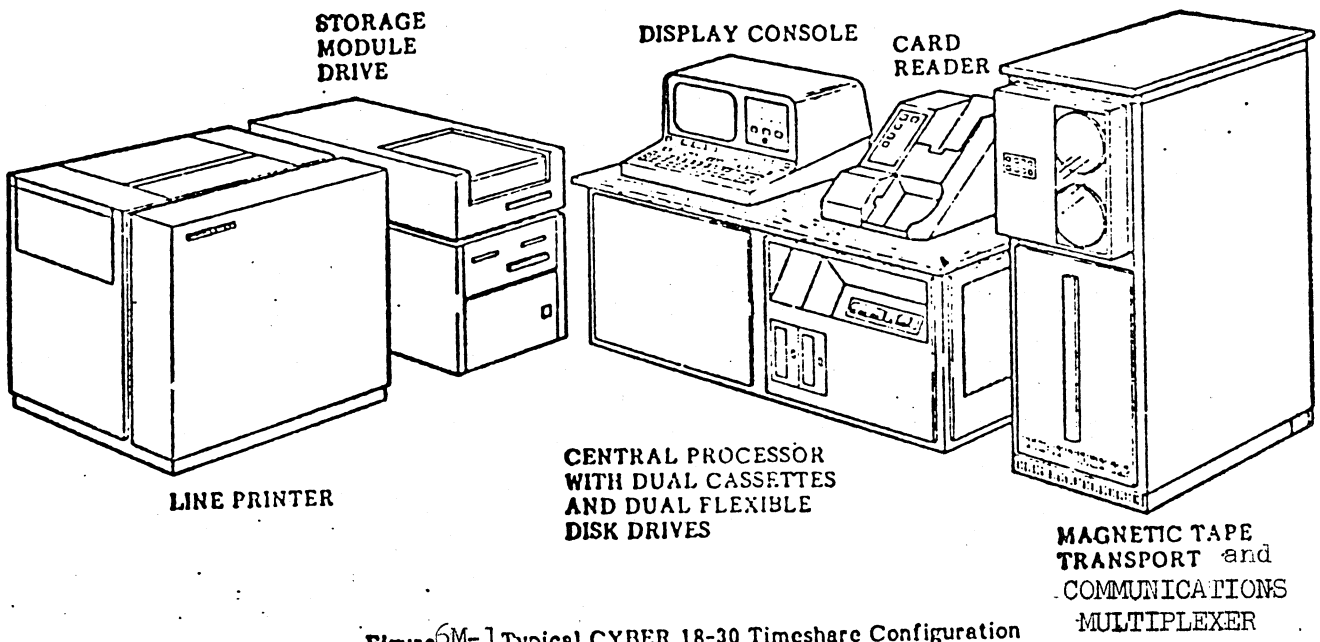

Figure 6M-1 Typical CYBER 18-30 Timeshare Configuration

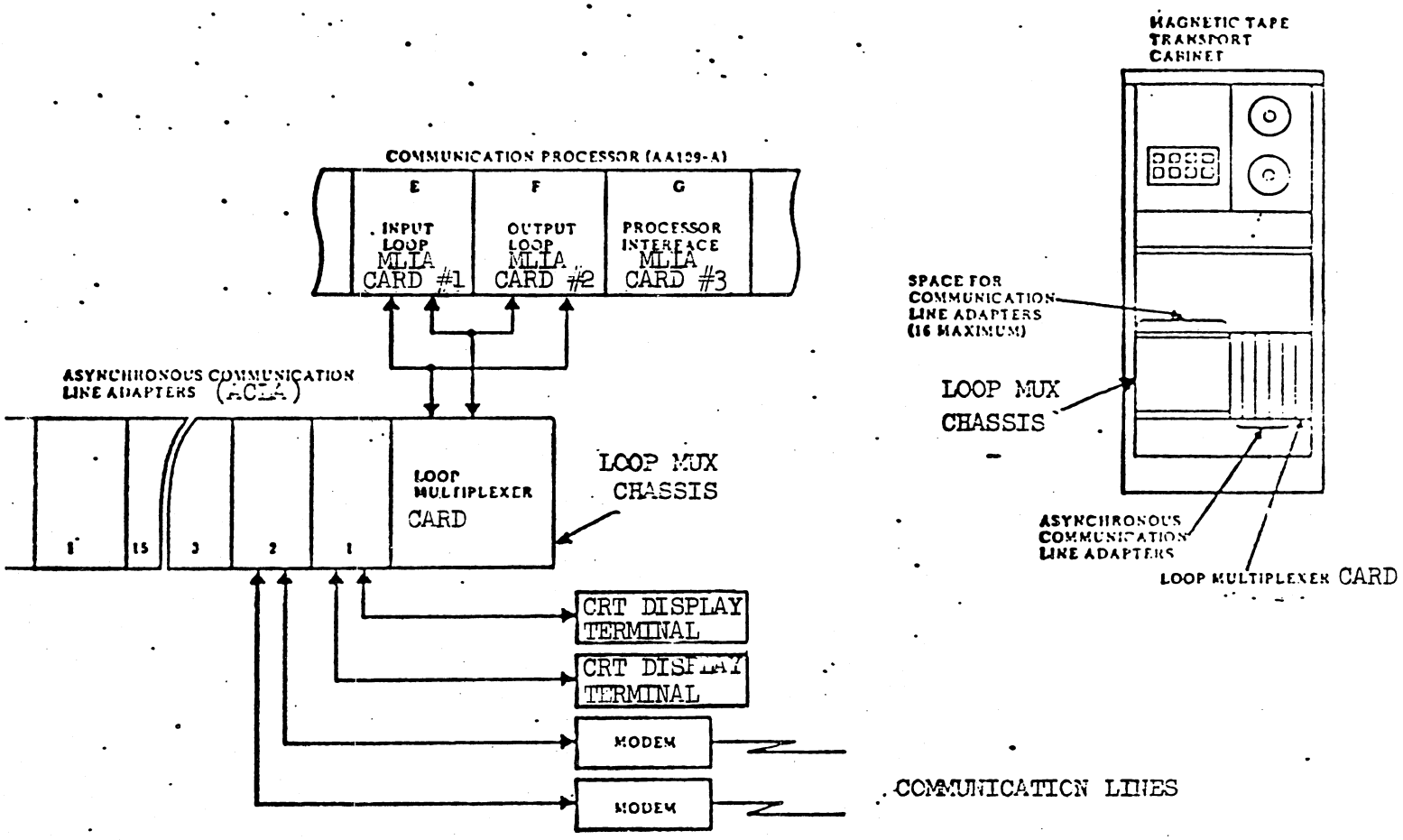

Figure 6M-2 Typical Communication Multiplexer Block Diagram

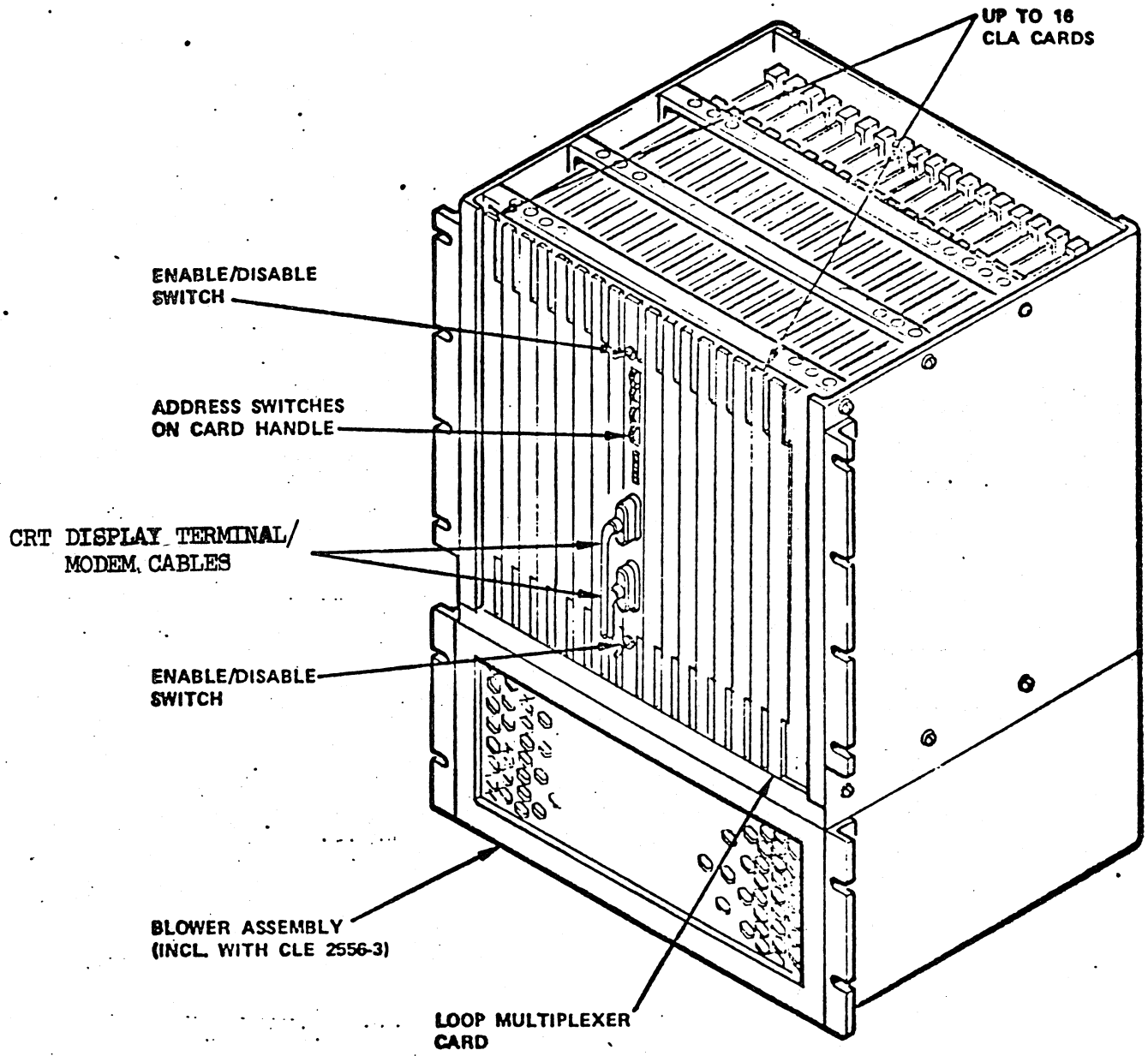

Figure 6M-3 Typical LM Card Cage Assembly

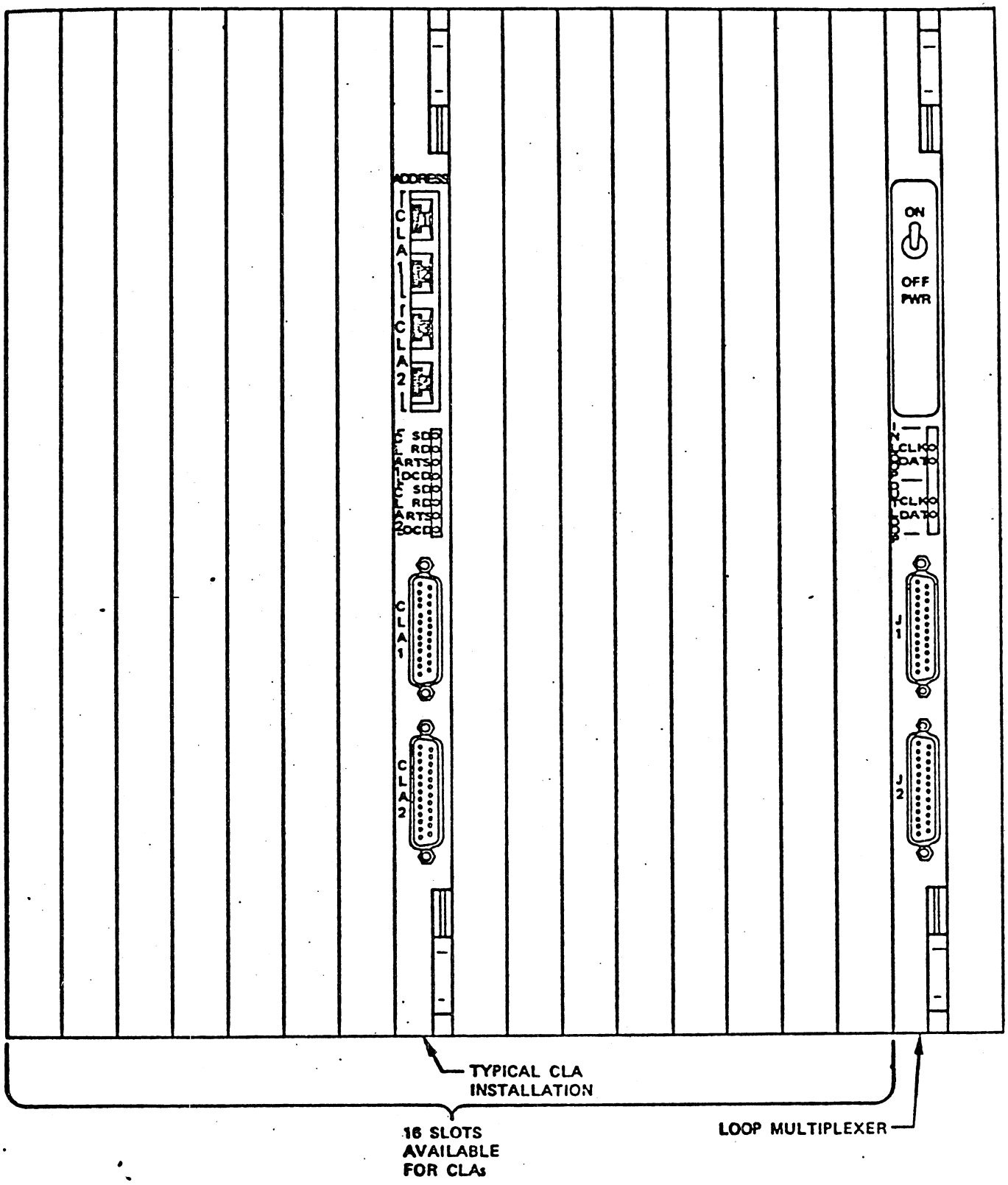

Figure 6M-4 Location of Loop Multiplexer and Typical Communications Line Adapter

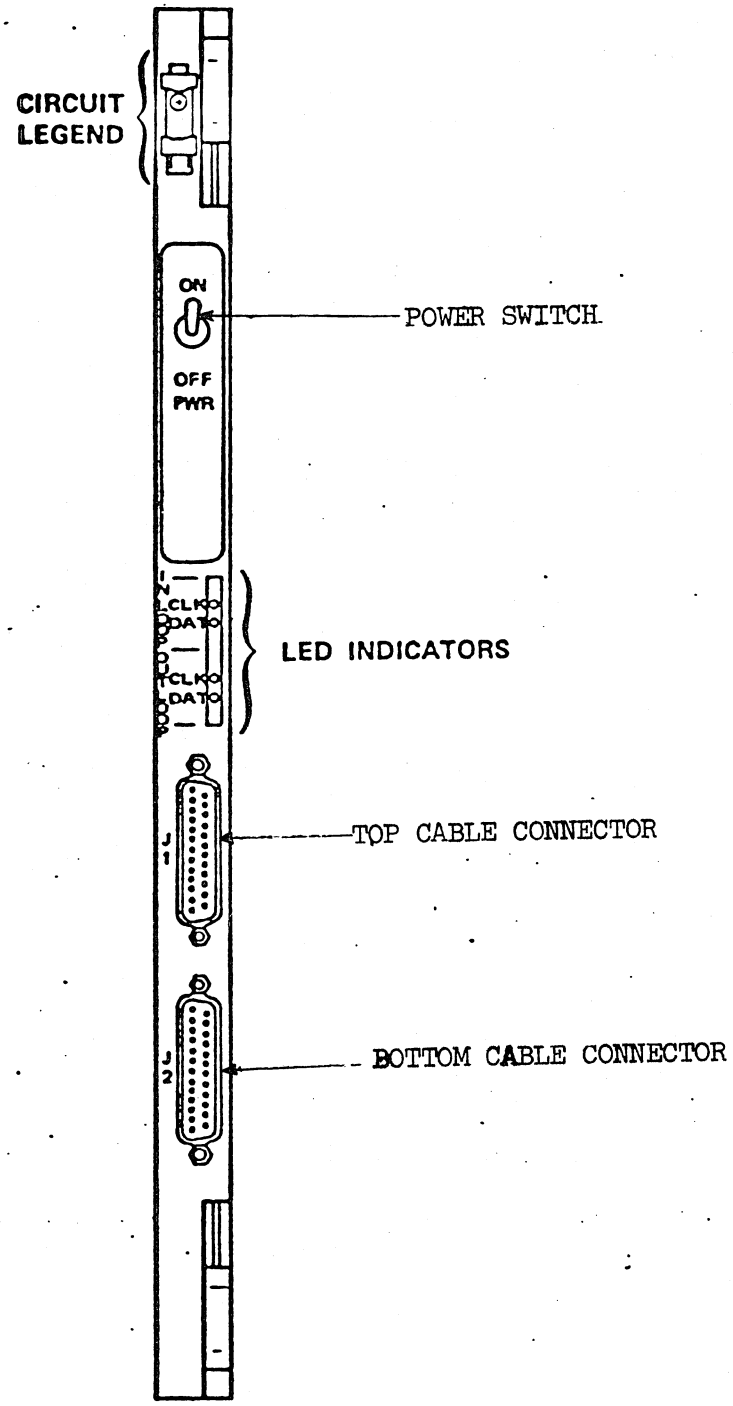

Figure 6M-5 **Loop Multiplexer Circuit Card - Controls and Indicators**

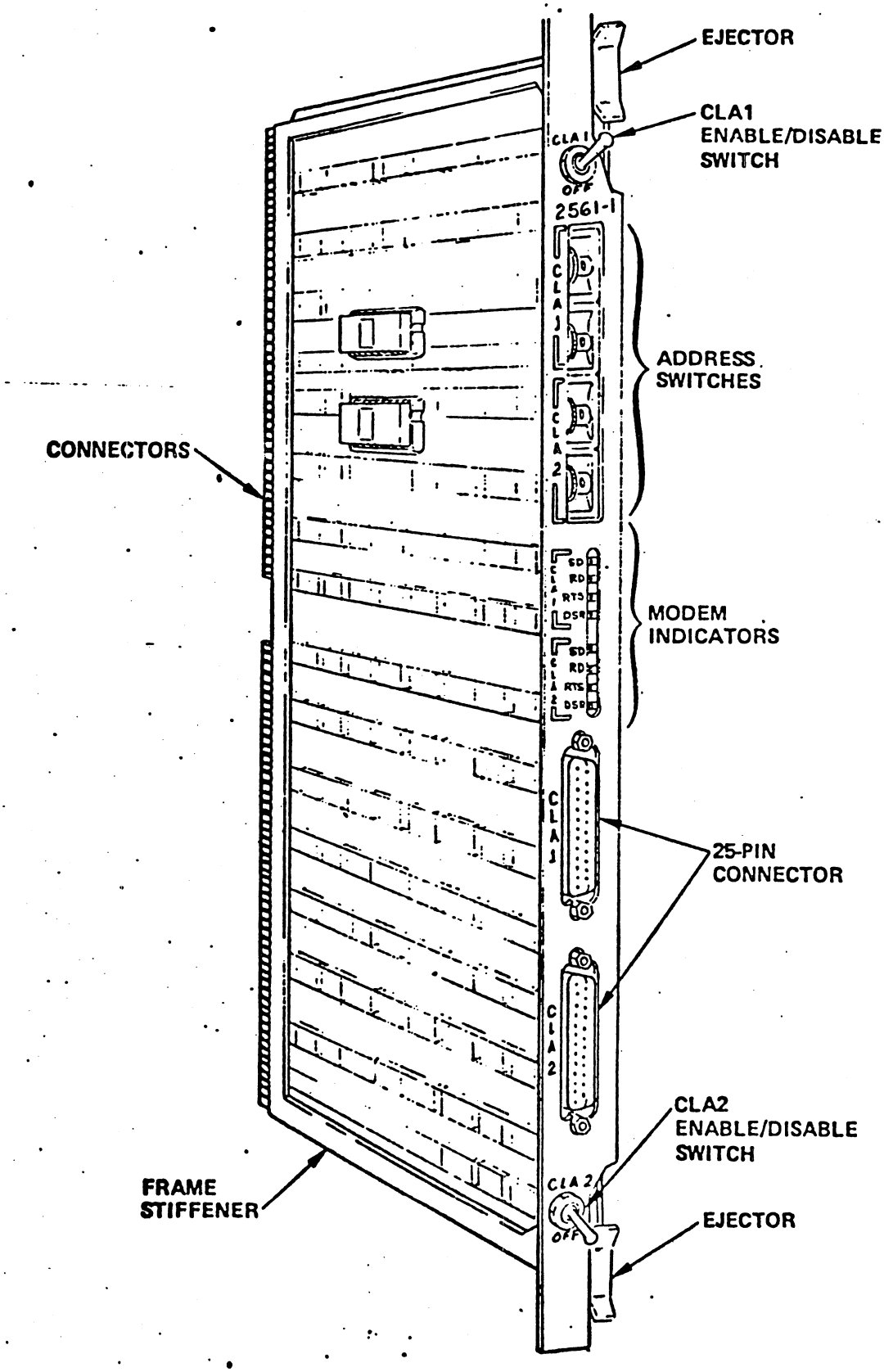

Figure 6M-6 ACLA Circuit Card

[redacted]

96768683 - 01

TABLE 6M-1 ACLA CABLES

Product No.	Assy No.	Application	Connector to Modem	Connector to ACLA
10400-1	746577xx	Compatible with AT&T 103/113 data sets	25-contact plug (male)	25-contact socket (female)
10400-2	746579xx	Can connect to terminal directly	25-contact socket (female) with threaded retaining spacers	25-contact socket (female)
10400-3	746583xx	Compatible with AT&T 103F, 202R data sets or CDC telegraphic level converter, or equivalent modem	25-contact plug (male)	25-contact socket (female)

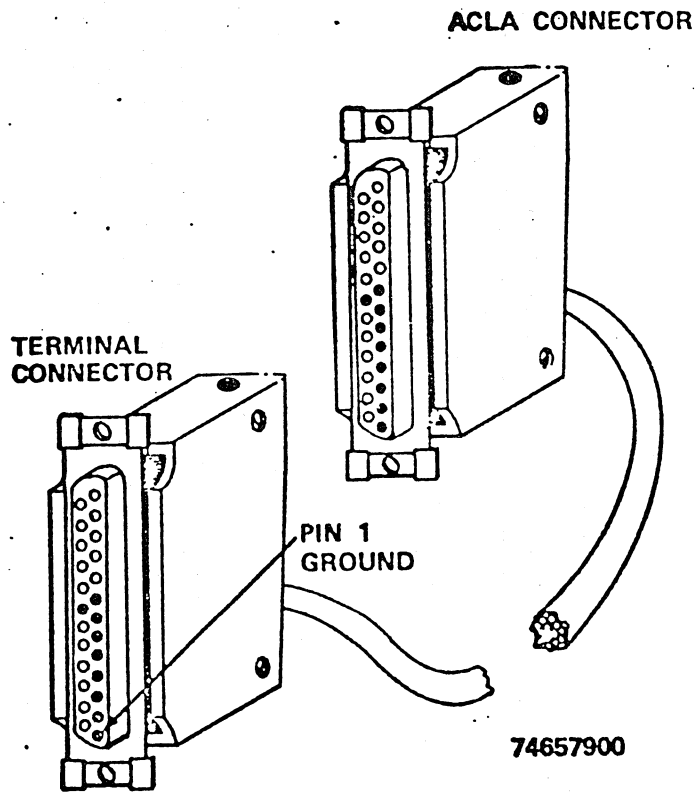

Figure 6M-7 Typical ACLA Cables

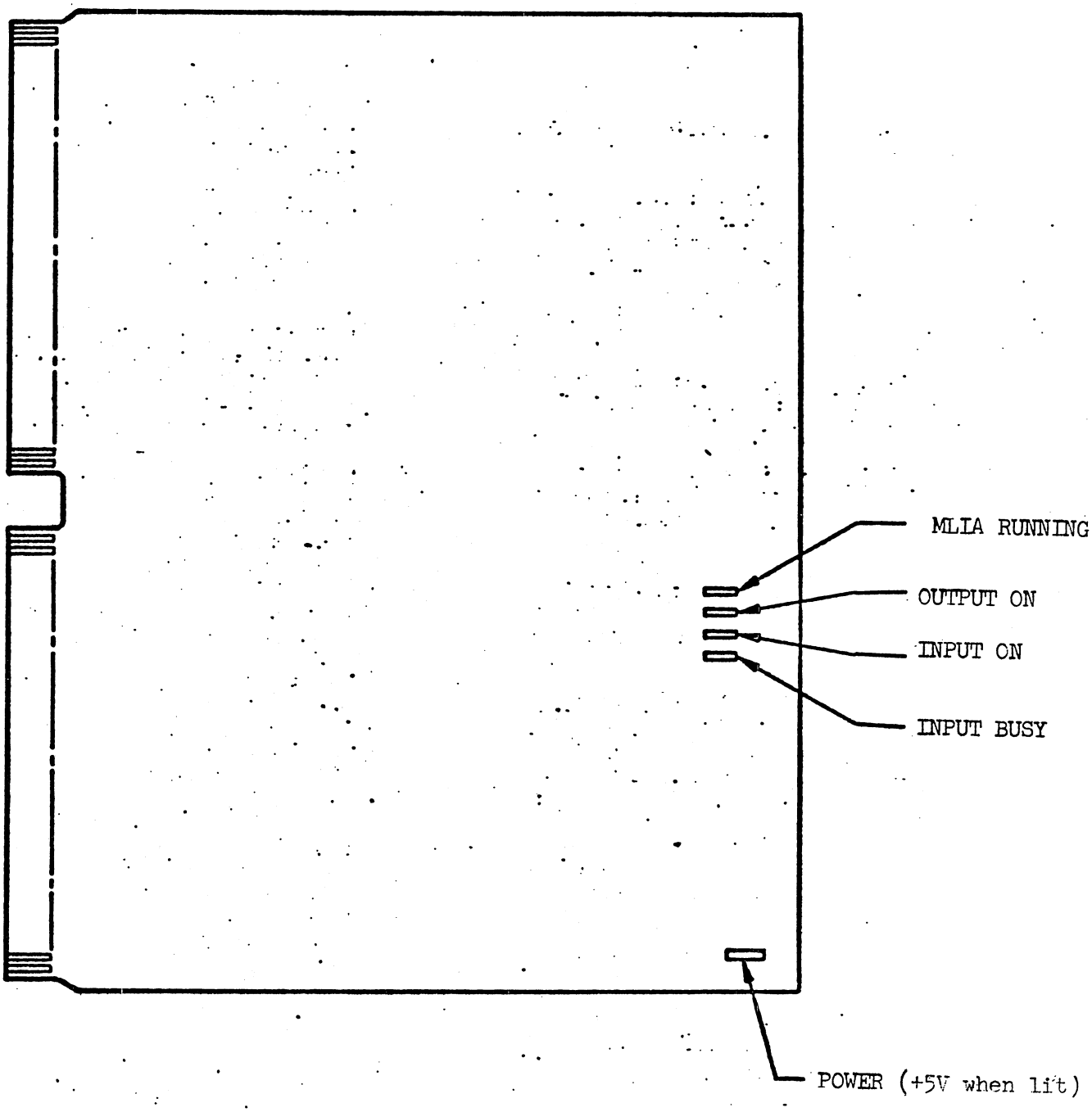

Figure 6M-8. MLIA #2, **Output Loop Interface Circuit Card - Indicators**

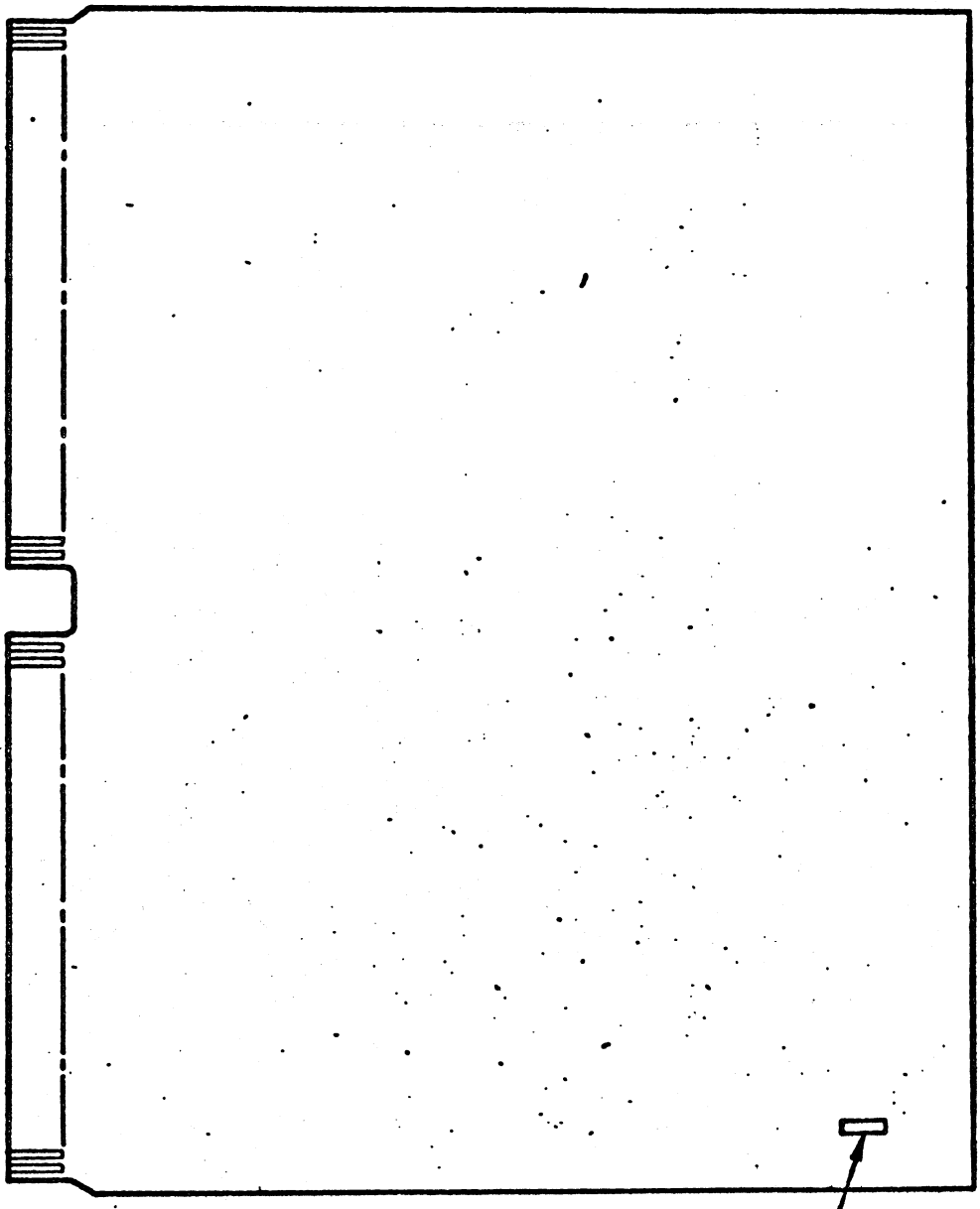

Figure 6M-9 POWER INDICATOR

MLIA #1 - INPUT LOOP INTERFACE CIRCUIT CARD
and
MLIA #2 - PROCESSOR INTERFACE CIRCUIT CARD

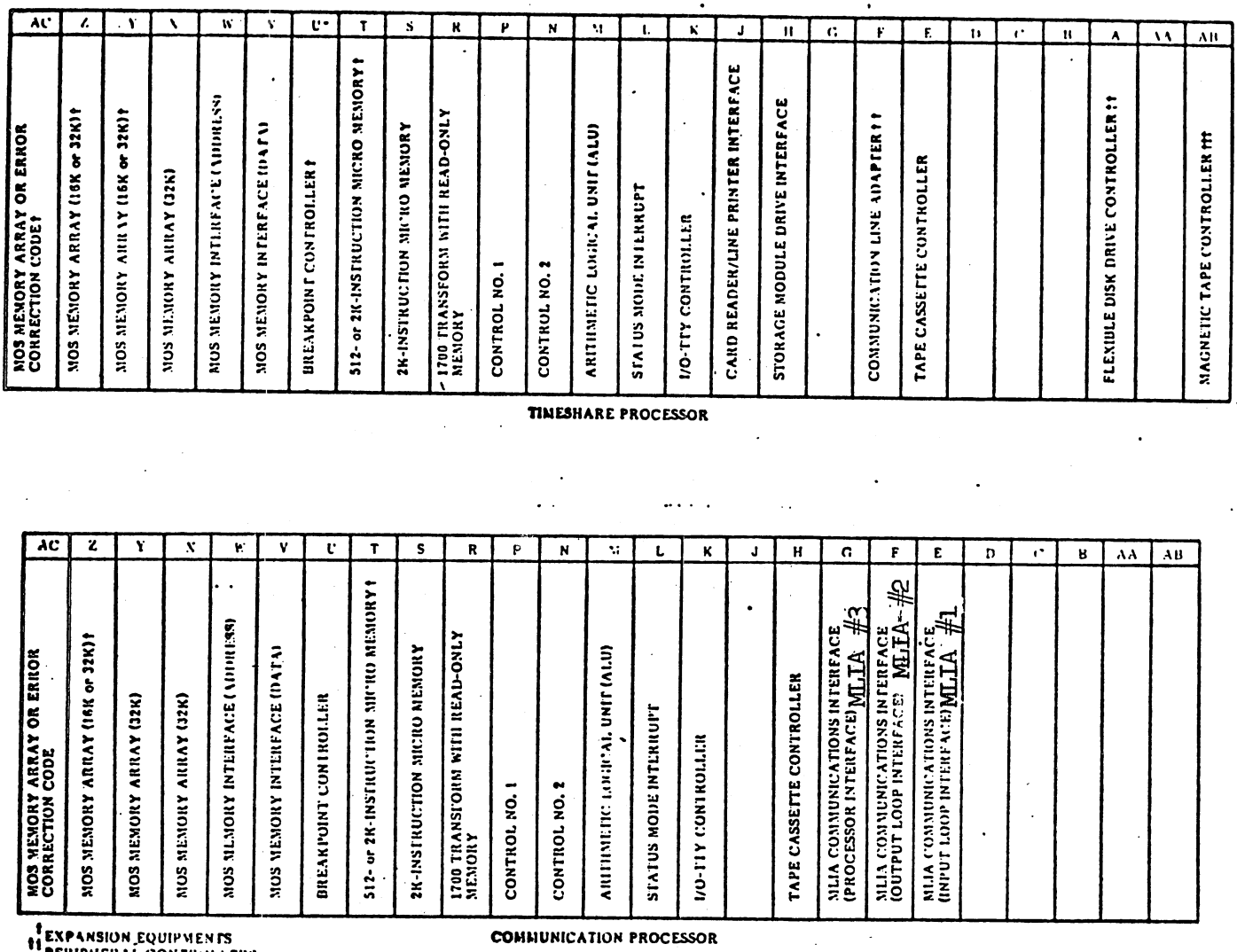

Figure 6M-1 CYBER 18-30 Timeshare Printed Wiring Assembly Slot Assignments

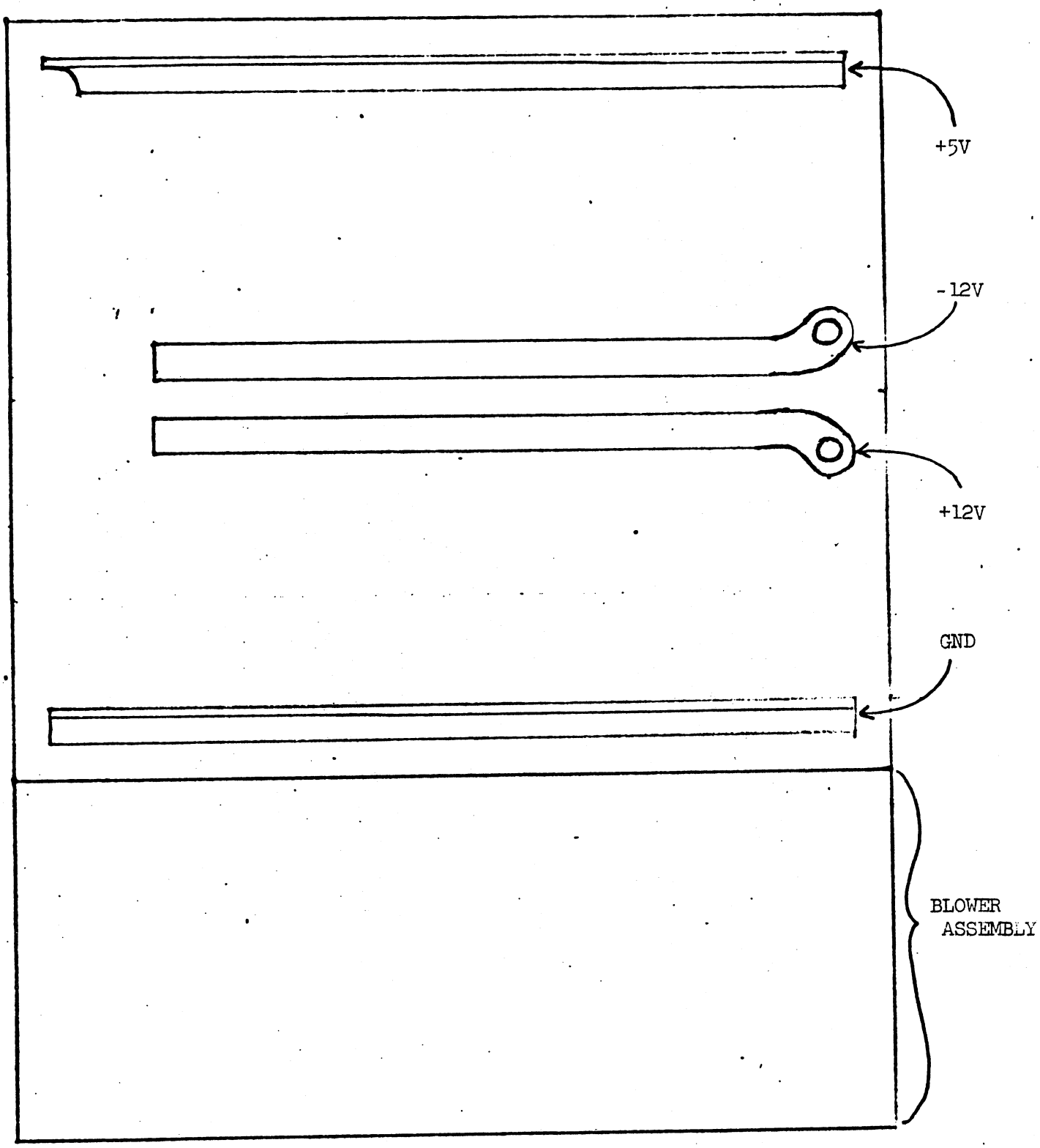

Figure 6M-11. Rear View of COMMUX Subsystem Card Cage Showing Voltage Strips

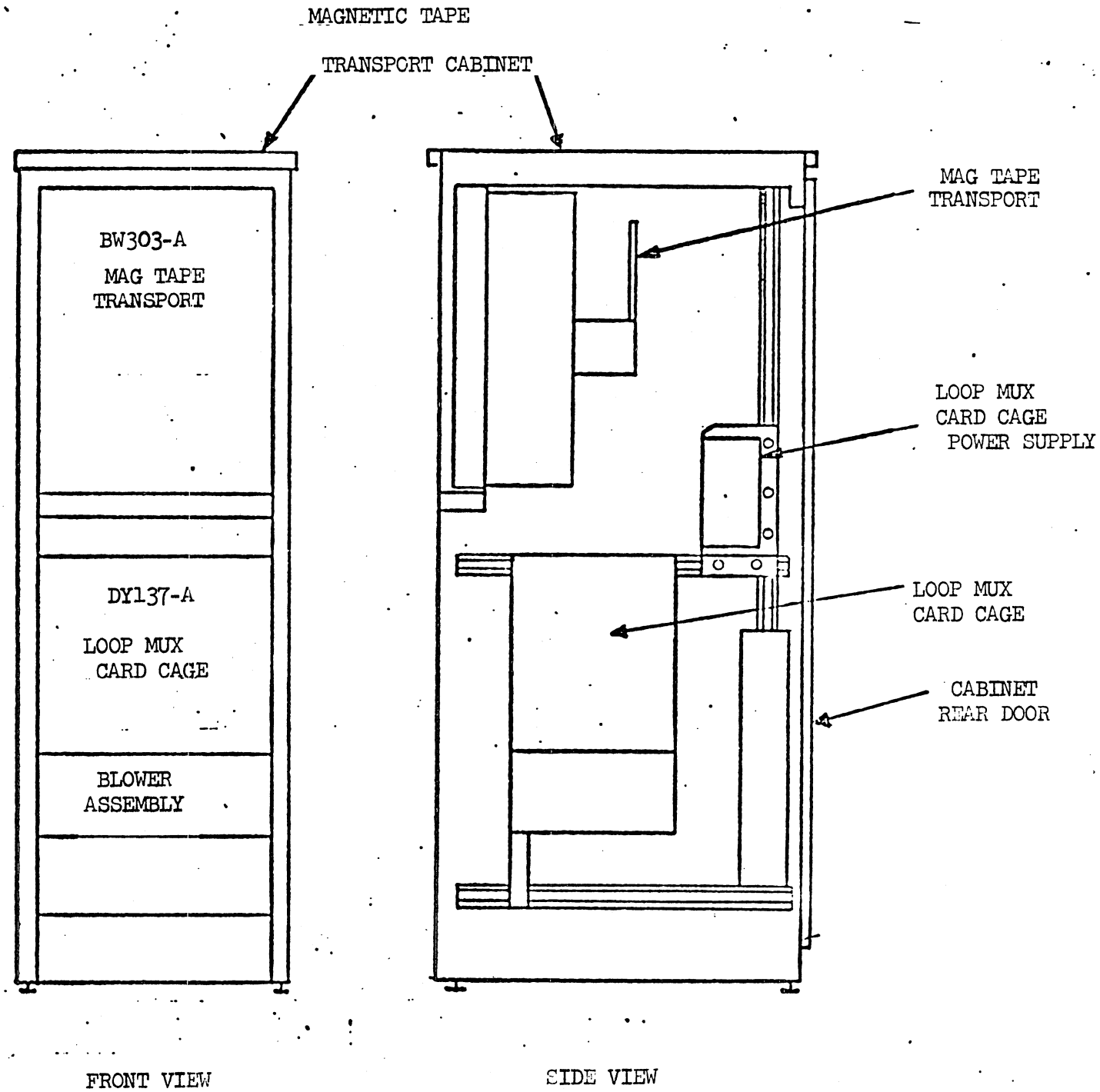

Figure 6M-12 Loop Mux Card Cage Power Supply Location

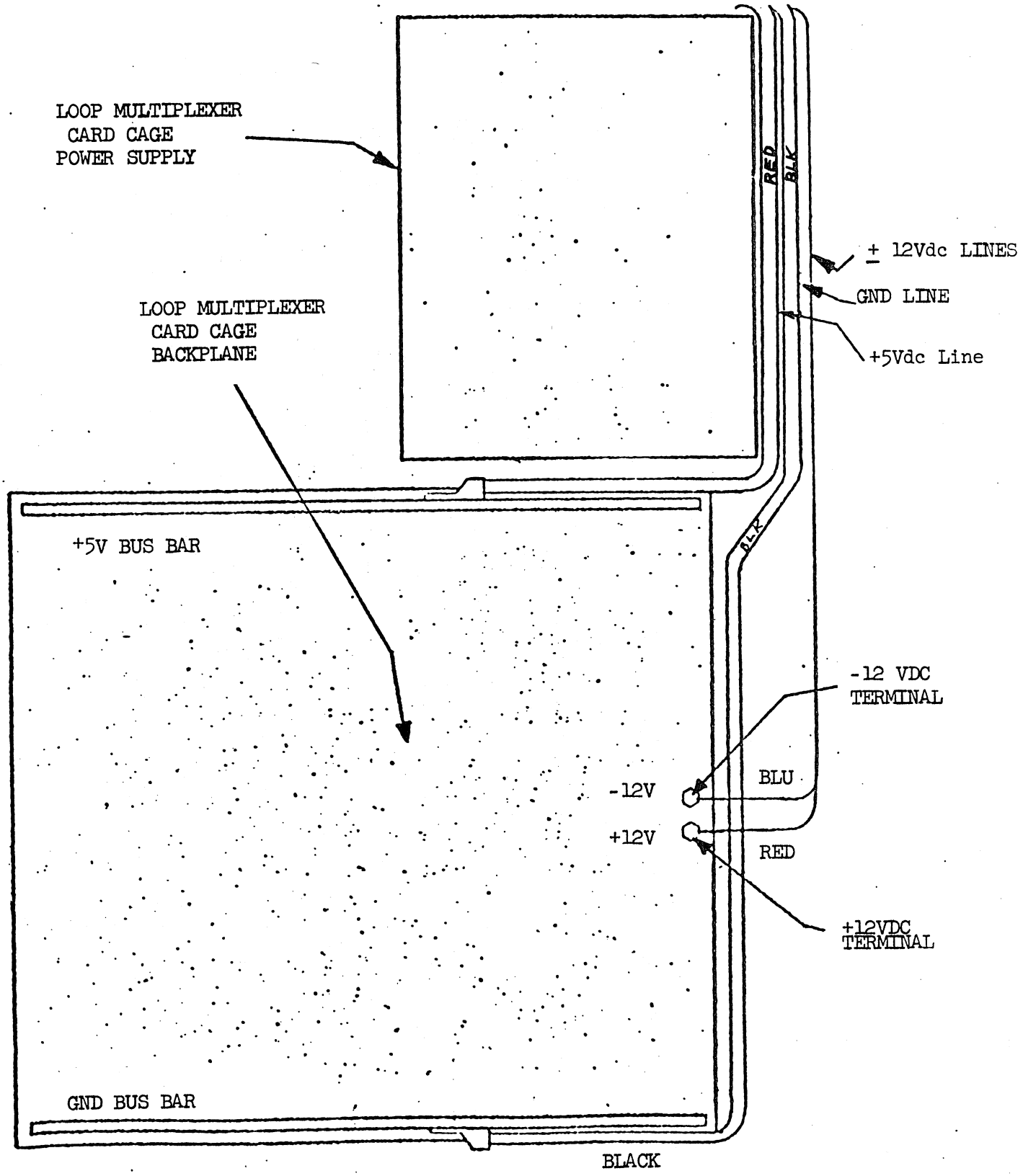

Figure 6M-13. Rear View of Loop Mux Card Cage and Card Cage Power Supply

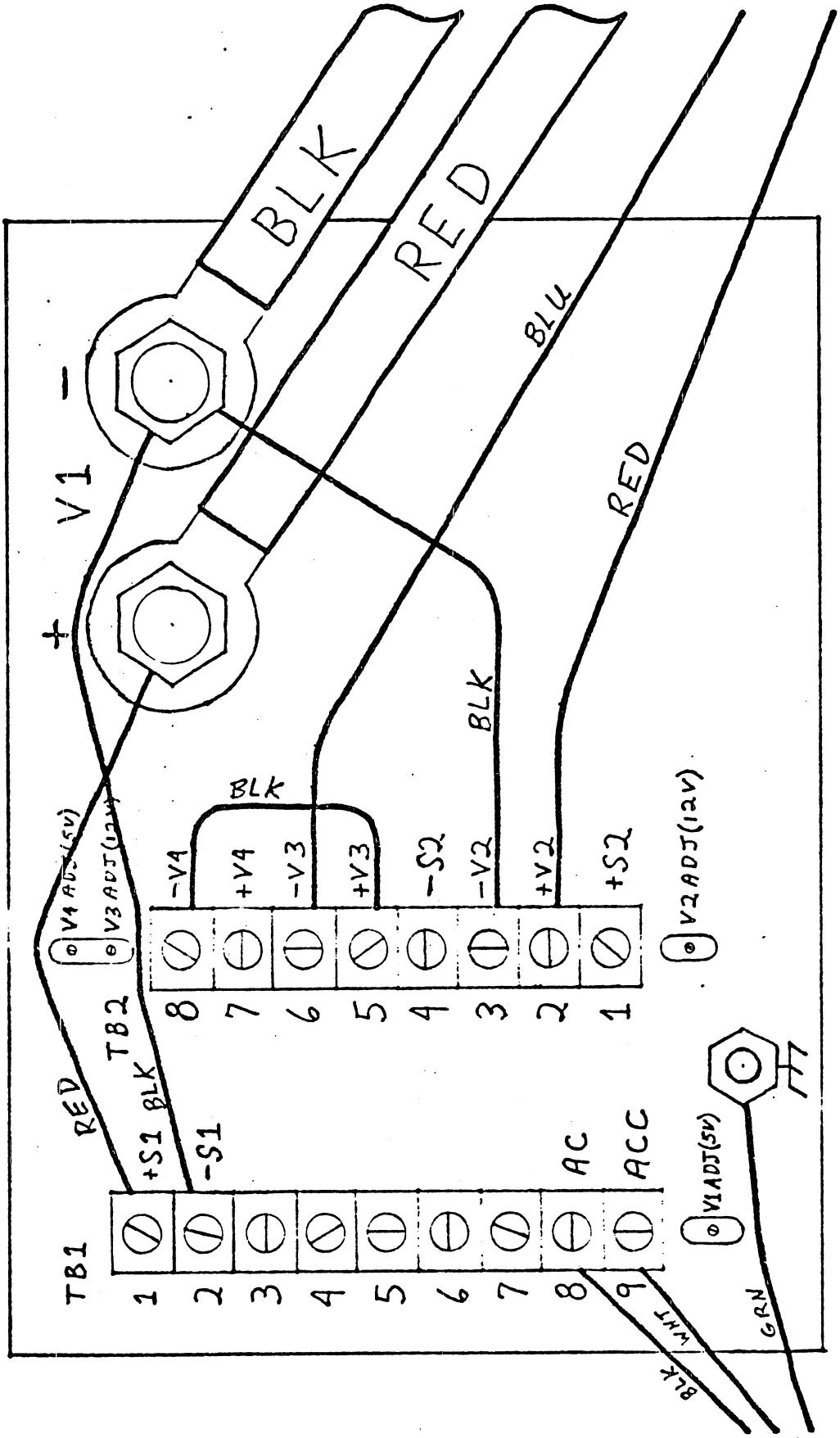

Figure 6M-14. Top View of the Loop Mux Card Cage Power Supply

Procedure M16 Visual Inspection

1. Open the lower front door (labeled "I/O Unit") of the Magnetic Tape Transport Cabinet (fig. 6M-1).

2. Check that all loop multiplexer and ACLA cards are properly seated in their connectors.

3. Check that all cables are correctly and fully connected to proper circuit card (figures 5M-3, 5M-4 and 5M-5)

4. Check that the processor cooling fans are operational (procedure M18)

Procedure M17 Fan Filter Cleaning

To clean the fan filter, perform the following:

1. Open the lower front door (labeled "I/O Unit") of the Magnetic Tape Transport Cabinet (Figure 6M-1).

2. Remove the fan filter from the Blower Assembly (see figure 6M-3 for Blower Assembly location). Use a vacuum cleaner to clean the front and back surfaces of the filter.

3. Check that the filter has been properly cleaned by holding the filter up to a light. No obvious dark areas should be seen. If it cannot be adequately cleaned, replace the filter.

4. Restore the filter to its previous location in the Blower Assembly.

Procedure M18 Cooling Fans Check

1. Open the lower front door (labeled "I/O Unit") of the Magnetic Tape Transport Cabinet (figure 6M-1).

2. Remove the fan filter from the Blower Assembly (see figure 6M-3 for blower assembly location).

3. Insert an inspection mirror below the fan. Do not touch the running fan blades.

4. Direct the light from a flashlight onto the mirror while angularly directing the mirror toward the fan blades.

5. Verify that the fan blades are in motion.

6. Repeat steps 3, 4, and 5 for each fan in the system.

7. Restore the filter to its previous location in the Blower Assembly.

Procedure M19 Cooling Fan Replacement

To replace the cooling fan, perform the following:

1. Turn the power off (procedure A4)

2. Open the lower front door (labeled "I/O Unit") of the Magnetic Tape Cabinet (figure 6M-1).

3. Remove the fan filter from the Blower Assembly (see figure 6M-3 for Blower Assembly location).

4. Using either a ¼-inch open-end wrench, a ¼-inch spin-tight wrench, or a Phillips head screwdriver, remove the four screws holding the cooling fan to be replaced.

5. Remove the power connect plug to the cooling fan.

6. Before inserting the new fan into the chassis, orient the new fan so that the air flow notation arrows on the fan are pointing upward.

7. Insert the new fan and connect it to the power plug.

8. Install the screws on the fan and fasten the assembly to the Blower Assembly Chassis.

9. Turn the power on (procedure A3), and verify proper operation of the cooling fan (procedure M18).

1 X 8 CHANNEL COMMUNICATIONS LINE ADAPTER

CONTENTS

Procedure		Page
N1	1 x 8 Channel Communications Line Adapter Installation/Replacement	6N-1
N2	Cable Adapter Paddle Board Installation/Replacement	6N-2
N3	Loop Back Cable Installation/Replacement	6N-2
N4	Signal Cabling Installation/Replacement	6N-3

Figures		Page
6N-1	1 x 8 Channel Communications	6N-1
6N-2	Cable Adapter Paddle Board	6N-2

N1. 1 x 8 CHANNEL COMMUNICATIONS LINE ADAPTER INSTALLATION/REPLACEMENT

To install or replace the 1 x 8 CH. CLA (figure 6N-1), perform the following:

1. This printed circuit board may be installed while the system power is still on.
2. Open the right side panel of the processor cabinet.
3. Remove the processor cover plate by rotating the two captive fasteners counterclockwise.
4. Locate the printed circuit board position. (See table 4A-3 in volume 1.)
5. Using the extractor tool attached to the cover plate, remove the printed circuit board from the chassis.
6. Before installing the new printer circuit board, verify that the switches are set up to correspond to normal operating positions shown in tables 4N-2 through 4N-7 .
7. Position the board in its assigned location with the component side facing left.
8. Seat the board into the back panel connector by applying firm thumb pressure at the upper and lower corners of the board.
9. Replace the panels, (procedure A3), and execute the diagnostics tests specified in table 6-3.

N2. CABLE ADAPTER PADDLE BOARD INSTALLATION/REPLACEMENT

To install or replace the cable adapter paddle board (figure 6N-2), perform the following:

1. This printed circuit board may be installed while the system power is still on; however, it is generally a good practice to turn the processor power off (procedure A4) while inserting the board.
2. Open the rear panel of the processor cabinet.
3. Locate the printed circuit board position. (See table 4A-3 in Vol. 1.)
4. Label all cables with respect to channel numbers that exist on the paddle board and remove all the cables from the paddle board.
5. Using a firm grip on the center section of the paddle board, pull straight back until the cable adapter slips free of the backplane pins.
6. Before installing the new cable adapter paddle board, check the backplane pins on slot the board is to be installed on and insure that no shorts or bent pins exist.
7. Inspect the pins on the adapter board and insure that no shorts or bent pins exist.
8. Position the board over the backplane slot with the connector side facing left.
9. Slip the board onto the pins 53 through 94 and 253 through 294 using enough pressure at top and bottom of board until backplane pins are inserted to the back of the connectors P01 and P02.
10. Connect the signal cables to the desired channels (see step 5) by slipping the cable connectors over the cable adapter pins.
11. Replace the rear panel, turn on the processor power (procedure A3) and execute the diagnostic tests specified in table 6-3.

N3. LOOP BACK CABLE INSTALLATION/REPLACEMENT

To install or replace the loop back cable, perform the following:

1. Open the rear panel of the processor cabinet
2. Locate the cable adapter paddle board (procedure N2).
3. Slip the J1 end of the cable over the pins of the transmitting channel (refer to figure N2). Insure the socket marked one (1) on the cable connector is slipped over the uppermost pin of the desired channel and that all pins are covered (the outside row of pins are not used as signal paths, therefore the cable conductors must be inserted over the back row of pins).
4. Slip the J2 end of the cable over the receiving channel's pins.
5. Inspect the connectors and insure no bent pins or shorts exist.
6. Replace the rear panel of the processor.

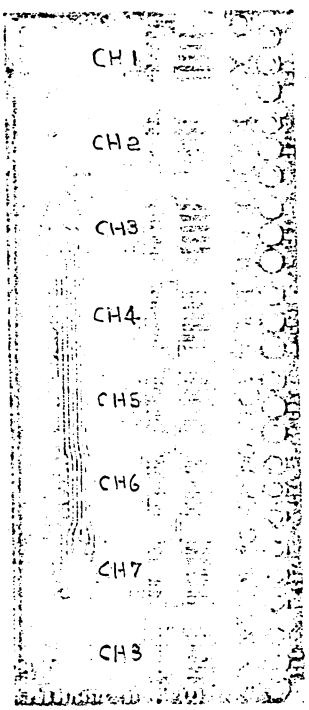

Figure 6N-2

Cable Adapter Paddle Board

N4. SIGNAL CABLING INSTALLATION/REPLACEMENT

To install or replace 1 x 8 CH. CLA signal cables, perform the following:

1. Signal cables may be installed while the system power is still on.
2. Open the rear panel of the processor cabinet.
3. Locate the cable adapter paddle (procedure N2).
4. Locate the desired channel number on the cable adapter board (refer to figure 6N-2) that the signal cable will be connected to.
5. Slip the P1 end of the cable over the pins of desired channel's socket. In the case of a customer-built cable, single out the lugs by signal designation (table 6N-1) and connect each lug individually, using a screw, flat washer, lock washer, and nut.
6. Attach the signal cable shield to the processor cabinet at the bottom entry point. The necessary U-bolts are included with the cable assembly. More than one cable may occupy each U-bolt.
7. Route the signal cable out of the cabinet through the bottom cable access point and along the floor to the rear of the cabinet.
8. Continue routing the signal cable to its assigned peripheral and secure the cable to the peripheral connector.
9. Replace the rear panel of the processor cabinet and execute the diagnostics specified in table 6-3.

TABLE 6N-1. CABLE ADAPTER PIN ASSIGNMENTS

Cable Adapter Pin Number	Signal
1.	Transmit Data
2.	Request to Send
3.	Receive Data
4.	Data Terminal Ready
5.	Clear to Send
6.	Ground

TABLE 6N-2 16 CHANNEL CONVERSION

CLA Unit 0		CLA Unit 1	
Paddle Board Channel No.	Test ID Port No.	Paddle Board Channel No.	Test ID Port No.
Ch. 1	0	Ch. 1	8
Ch. 2	1	Ch. 2	9
Ch. 3	2	Ch. 3	A
Ch. 4	3	Ch. 4	B
Ch. 5	4	Ch. 5	C
Ch. 6	5	Ch. 6	D
Ch. 7	6	Ch. 7	E
Ch. 8	7	Ch. 8	F

MATRIX PRINTER

CONTENTS

Procedure		Page
P1	RS-232 Interface Board Installation/Replacement	6P-1

Figure		Page
6P-1	RS-232 Interface Board	6P-1
6P-2	I/O Connector Signal Jumper	6P-2

P1 RS-232 INTERFACE BOARD INSTALLATION/REPLACEMENT

To install or replace the RS-232 interface board (figure 6P-1), perform the following:

1. Turn the ON/OFF switch to OFF.
2. Unplug the printer line cord from its power source.
3. Remove the upper cabinet cover.
4. Remove the lower cabinet skirt. (See Matrix Printer Equipment Field Service and Reference Manual 95445028.)
5. Fold down the outermost printed circuit card mounting rack located at the rear of the printer by grasping the two nylon rings and pulling inward.
6. Remove the RS-232 interface board by using the thumb tabs provided.
7. Set the switches on the new RS-232 interface board to the desired configuration (see section 4P).
8. Insert the RS-232 interface board into the rack component side up by lining up the edge of the board with the nylon tracks provided. Once assured the board is lined up correctly, use firm thumb pressure to seat the board into the connector.
9. Fold the printed circuit card mounting rack back up into the printer and secure it by insuring the nylon tabs are inserted into the holes provided.
10. Replace the lower cabinet skirt.
11. Replace the upper cabinet cover.
12. Plug the printer line cord into its power source.
13. Turn the ON/OFF switch to ON.

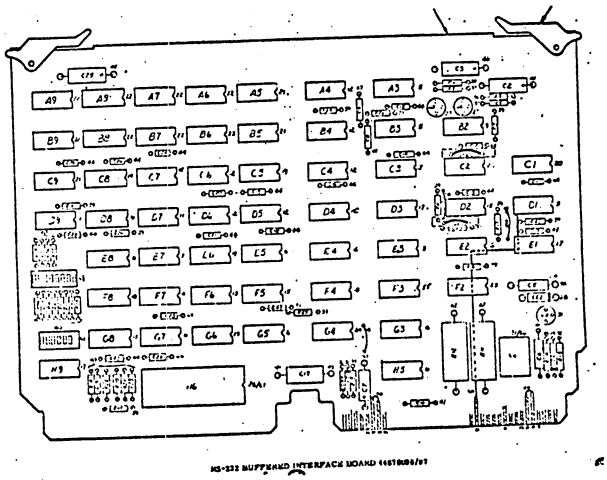

Figure 6P-1. RS-232 Interface

CARTRIDGE DISK DRIVE PROCEDURES
CONTENTS

Procedure		Page
Q1	Control Panel Lamp Replacement	6Q-1
Q2	Inspect and clean READ/WRITE Upper Heads	6Q-1
Q3	Disk Cartridge Inspection and Cleaning	6Q-1
Q4	Fixed Disk Inspection and cleaning	6Q-1
Q5	Absolute Filter R & R	6Q-2
Q6	Pre-Filter Cleaning	6Q-2
Q7	Drive Belt R & R	
Q8	Disk Brush Check and Replacement	6Q-4
Q9	Inspect and Dry Magnetic Chuck	6Q-4
Q10	Fixed Disk Removal and Replacement	6Q-4
Q11	Fixed Disk Index/Sector Transducer Removal and Replacement	6Q-7
Q12	Static Eliminator R & R	6Q-8
Q13	Sector Ring R & R	6Q-8
Q14	Cartridge-On Switch R & R	6Q-8
Q15	Disk Brush Assembly R & R	6Q-10
Q16	Brush Motor R & R	6Q-11
Q17	Spindle Drive M tor Assembly R & R	6Q-11
Q18	Card Cage Printed Circuit Board R & R	6Q-13
Q19	Power Supply R & R	6Q-14
Q20	Piggyback Power Board R & R	6Q-14
Q21	Card Cage/Mother Board R & R	6Q-15
Q22	Blower Motor Assembly R & R	6Q-15
Q23	Switch Board R & R	6Q-17
Q24	Temperature Stabilization Check and Adjustment	6Q-19
Q25	Track Indicator Check and Adjustment	6Q-19
Q26	Cartridge-On Switch Check and Adjustment	6Q-19
Q27	Static Eliminator Check	6Q-20
Q28	Disk Brush Switch Check and adjustment	6Q-20
Q29	Fixed Disk Index/Sector Transducer Check and Adjustment	6Q-20
Q30	Cartridge Disk Drive Controller Replacement/Installation	6Q-21
Q31	I/O Board Removal and Replacement	6Q-21
Q32	Spindle Brake Board R & R	6Q-21
Q33	Start Relay R & R	6Q-22
Q34	Triac Assembly R & R	6Q-22
Q35	Controller to Disk Drive Cable Inspection and Replacement	6Q-22

Figure	Page
6Q-1 Filter Mounting	6Q-3
6Q-2 Front Panel Removal	6Q-5
6Q-3 Fixed Disk Removal	6Q-6
6Q-4 Module Locator (Below Deck)	6Q-9
6Q-5 Packlock and Brush Assemblies	6Q-12
6Q-6 Power Supply Assembly	6Q-16
6Q-7 Module Location (Above Deck)	6Q-18
6Q-8 Track Indicator	6Q-19

CARTRIDGE DISK DRIVE PROCEDURES

Q1 CONTROL PANEL LAMP REPLACEMENT

1. Remove the Pushbutton Cover from the switch assembly by pulling the cover outward from the switch. Note Orientation of metal bracket inside pushbutton cover for re-installation during Step 4.
2. Using bulb removal tool, remove the lamp from the socket (Do not turn the lamp since it is a plug-in device).
3. Install new lamp.
4. Re-install lamp cover. Care must be taken that the metal tabs on the push-button bracket do not come in contact with the metal clamps supplying voltage to the lamp or damage to the switch logic will occur.

Q2 INSPECT AND CLEAN READ/WRITE UPPER HEADS

1. Depress START/ STOP switch to STOP (out) and wait for spindle to stop rotating (START/ STOP light extinguished).
2. Open top cover.
3. Set main circuit breaker to off position.
4. Remove electronics cover.

CAUTION

Do not smoke while cleaning heads. Do not touch head face. When cleaning or buffing, always move tongue depressor perpendicular to length of head/ arm assembly. Do not leave residue or lint on head faces.

5. Inspect heads for dirt on head face. Clean heads, if required, as follows:
   a. Use lint-free gauze on a tongue depressor to lightly dry buff head face.
   b. If dry buffing does not remove dirt, dampen (do not soak) gauze with media cleaning solution and wipe head face. Use dry gauze to lightly buff head face.

Q3 DISK CARTRIDGE INSPECTION AND CLEANING

1. Depress START/ STOP switch to STOP (out) and wait for spindle to stop rotating (START/ STOP lamp extinguished).
2. Remove disk cartridge.
3. Using a bright, directional light, inspect both sides of disk. If disk is dirty, have disk cartridge cleaned.
4. If disk surface is scratched, cartridge should be replaced.

Q4 FIXED DISK INSPECTION AND CLEANING

Cleaning of fixed disk will not normally be necessary, if disk area is kept covered. Clean disk by performing the following procedure.

1. Perform removal steps 1 through 11 of fixed disk removal and replacement procedures.
2. Inspect fixed disk brushes for dust. If brushes are dirty and show excessive wear, replace all brushes.
3. Slowly rotate spindle by hand and inspect both sides of disk. If scratches are found, replace disk.
4. To clean disk, wrap a piece of lint free gauze around tongue depressor and dampen (do not soak) with media cleaning solution.
5. While rotating spindle by hand, move tip of spatula (applying moderate pressure) across disk to outer edge.

6. Repeat step 5 for both disk surfaces until gauze comes away clean from disk surface.

7. Wrap a clean, dry piece of gauze around spatula and repeat step 5 to remove any residue left by cleaning solution.

8. To complete installation, perform replacement steps 4 through 9 of fixed disk removal and replacement, procedure Q10.

Q5 ABSOLUTE FILTER R & R

1. Depress START/STOP switch to STOP (out) and wait for spindle to stop rotating (START/STOP lamp extinguished).

2. Open top cover.

3. Set main circuit breaker to off position.

4. Remove cabinet skin from right-hand side of unit as viewed from the front (base cabinet only).

5. Loosen filter clamp (Figure 6Q-1) and swing clamp clear of filter.

6. Remove filter expander bracket.

7. Slide blower expander forward until filter is free.

8. Remove filter.

9. Install replacement absolute filter and pre-filter.

NOTE

Insure that foam gasket between absolute filter and power supply are properly aligned. If not properly aligned, air flow can be restricted causing damage to power supply.

10. Install filter expander.

11. Install expander bracket.

12. Install filter clamp.

13. Install cabinet side skin.

14. Close top cover.

Q6 PRE—FILTER CLEANING

1. Remove front end panel by pulling panel out at the top until fasteners release, then lift panel off tabs until clear of cabinet.

2. Remove pre-filter from cabinet.

3. Remove pre-filter element from aluminum frame and clean by washing in warm water and soap.

4. Rinse and dry filter element and install in aluminum frame.

5. Install filter in cabinet. Insure that expanded metal screen is up.

6. Install front end panel.

Q7 DRIVE BELT R & R

1. Depress START/STOP switch to STOP (out) and wait for spindle to stop rotating (START/STOP lamp extinguished).

2. Set main circuit breaker to off position.

3. Remove left-hand side skin (base cabinet only), and remove module under cover.

4. Remove transducer assembly mount (see figure 6Q-4) by removing one screw (Note orientation of sector option).

5. Remove static eliminator and its mounting bracket (see Figure 6Q-4).

6. Remove the Drive Belt.

REPLACEMENT

1. Install the belt as shown in figure 6Q-4.

2. Rotate the spindle manually to insure that the drive belt runs true.

3. Install static eliminator and bracket.

4. Install transducer and mount.

5. Perform Fixed Disk Index/Sector Transducer Adjustment, procedure Q29.

6. Adjust static eliminator for contact with spindle shaft.

7. Perform Static Eliminator Check, procedure Q27.

8. Install module under cover.

9. Install cabinet side skin.

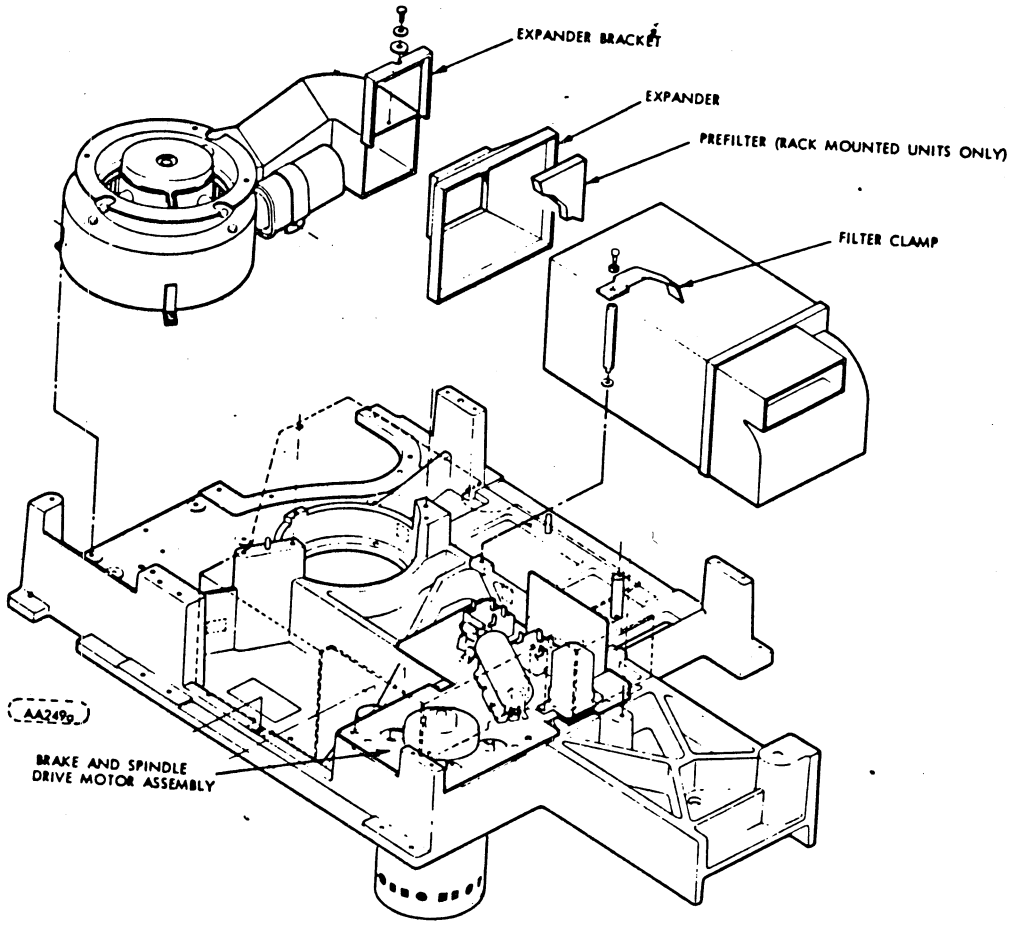

Figure 6Q-1. Filter Mounting

Q8 DISK BRUSH CHECK AND REPLACEMENT

1. Perform removal steps 1 through 11 of disk brush assembly R & R, procedure Q15.
2. If disk brushes are dirty and show excessive wear, replace all brushes. Pull brush horizontally to remove from holding bracket. The new brush snaps into place when seated properly.
3. Perform replacement steps 3 through 11 of disk brush assembly removal and replacement, procedure Q15.

Q9 INSPECT AND DRY MAGNETIC CHUCK

This procedure should be performed at least once each day if device goes through dew-point daily.

NOTE

If the Drive is stored or operated in environmental conditions outside the envelope in the Product Specification, condensation will form in the Drive. In order to prevent corrosion, use a soft absorbent cotton cloth and wipe dry the surface of the Chuck.

1. Depress START/ STOP switch to STOP (out) and wait for spindle to stop rotating.
2. Remove disk cartridge.
3. Inspect Magnetic Chuck for condensation.
4. If condensation is present use a soft absorbent cotton cloth and wipe dry.

Q10 FIXED DISK REMOVAL AND REPLACEMENT

REMOVAL

1. Depress START/ STOP pushbutton to STOP (out) and wait for spindle to stop rotating (START/ STOP lamp extinguished).
2. Remove top cover by lifting cover straight up
3. Remove disk cartridge.
4. Set main circuit breaker to off position.
5. Remove electronics cover.
6. Remove power supply cover and disconnect A1P5. (see figure 6Q-6)
7. Disconnect three ground straps from front panel.
8. Remove front panel by loosening two screws at bottom of panel and removing two screws on each side of panel (see Figure 6Q-2).
9. Remove the three screws from inside cartridge receiver.
10. Lift the cartridge receiver up until connector A9P2 can be unplugged (see Figure 6Q-2). After A9P2 is unplugged further remove cartridge receiver.

CAUTION

While lifting cartridge receiver be extremely careful to avoid damage to the fixed disk.

11. Remove fixed disk clamp (see Figure 6Q-3).
12. Remove fixed disk.

REPLACEMENT

1. Inspect replacement disk for defects, replace if required.
2. Install fixed disk and insure proper seating.
3. Install disk clamp. Torque screws to 12 in/lbs.

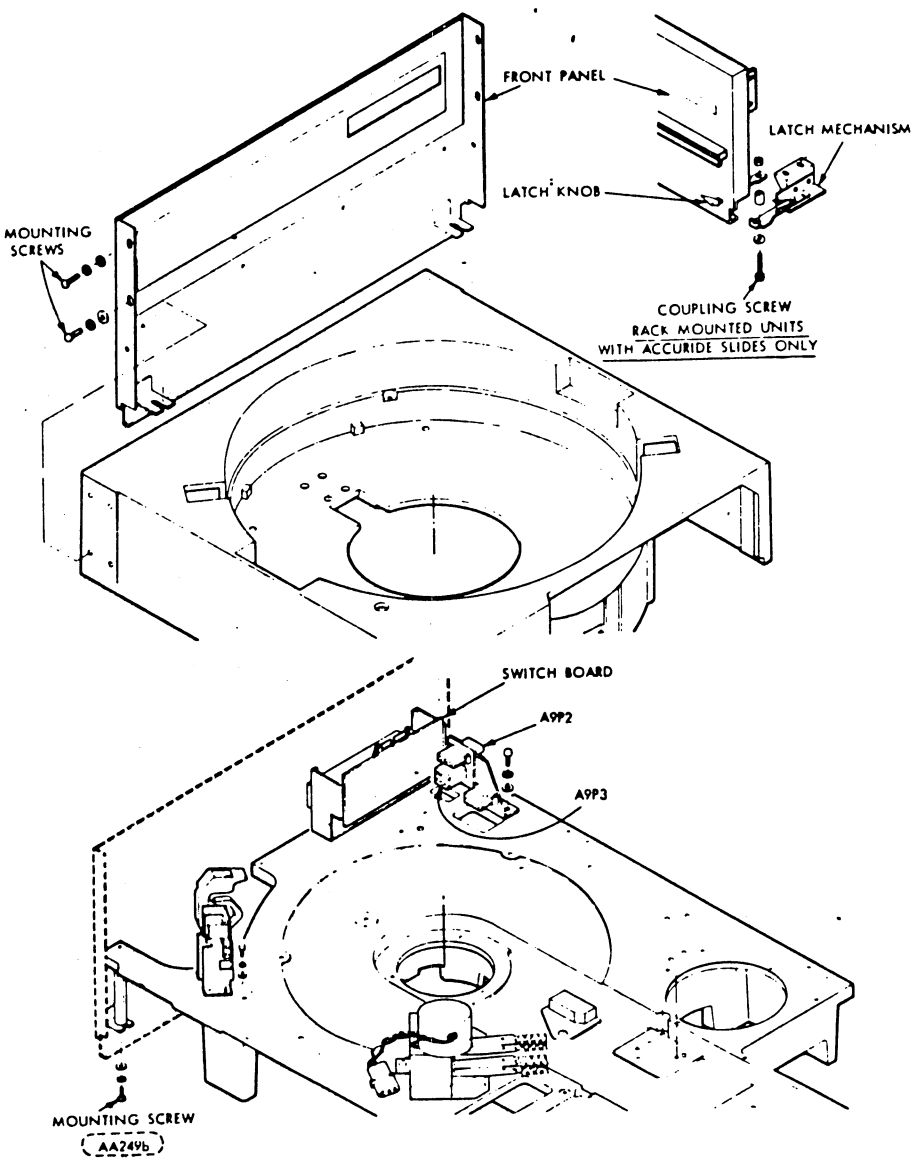

Figure 6Q-2. Front Panel Removal

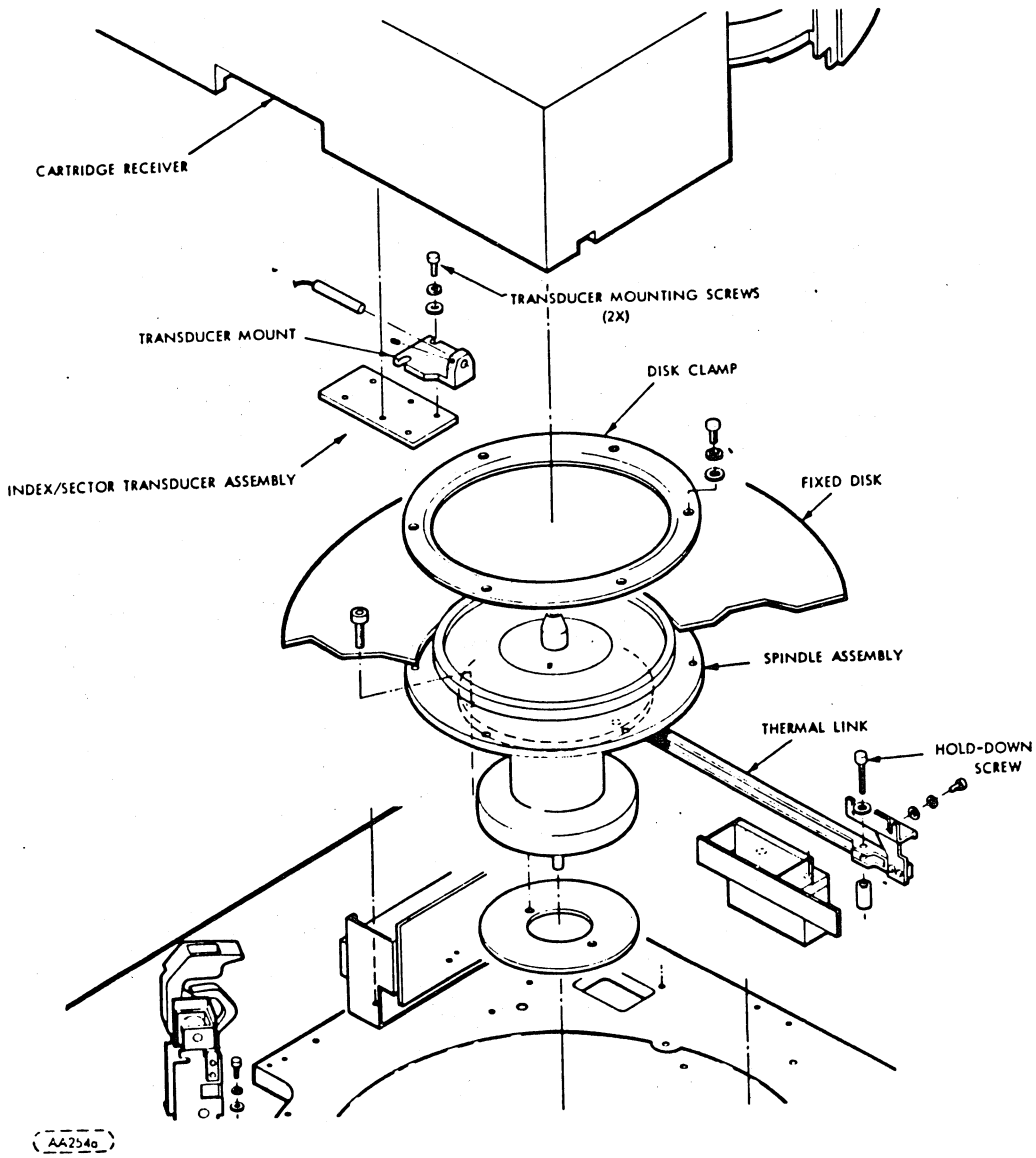

Figure 6Q-3. Fixed Disk Removal

4. Install cartridge receiver by aligning it on the two small pins on the deck and connecting A9P2.

CAUTION

While installing cartridge receiver be extremely careful to avoid damage to fixed disk.

5. Fasten cartridge receiver with three screws.
6. Install front panel and ground straps.
7. Install electronics cover.
8. Install top cover (base cabinet only).

Q11 FIXED DISK INDEX/SECTOR TRANSDUCER REMOVAL AND REPLACEMENT

REMOVAL

1. Depress START/ STOP switch to STOP (out) and wait for spindle to stop rotating (START/ STOP lamp extinguished)
2. Remove top cover by lifting cover straightup (base cabinet only).
3. Remove disk cartridge.
4. Set main circuit breaker to off position.
5. Remove left-hand side skin (base cabinet only).
6. Remove module under cover.
7. Disconnect two ground straps from front panel.
8. Remove front panel by loosening two screws at bottom of panel and removing two screws on each side of panel (see Figure 6Q-2).
9. Remove electronics cover.
10. Remove the three screws from inside cartridge receiver.
11. Lift the cartridge receiver up until connector A9P2 can be unplugged (see Figure 6Q-2). After A9P2 is unplugged further remove cartridge receiver.

CAUTION

While lifting cartridge receiver be extremely careful to avoid damage to the fixed disk.

12. Disconnect A9P1 and unlace harness from around blower motor assembly.
13. Loosen index sector transducer clamp screw.
14. Remove transducer from mount.

REPLACEMENT

1. Install new transducer in mount.
2. Connect A9P1 and lace harness around blower motor assembly.
3. Perform fixed disk index/ sector transducer check and adjustment procedure.
4. Replace cartridge receiver by aligning it on the two small pins on the deck and connecting A9P2.

CAUTION

While installing cartridge receiver be extremely careful to avoid damage to fixed disk.

5. Fasten cartridge receiver with three screws.
6. Install front panel and ground straps.

7. Install electronics cover.
8. Install module under cover.
9. Install cabinet side skin.
10. Install top cover.

Q12 STATIC ELIMINATOR R & R

REMOVAL

1. Depress START/ STOP switch to STOP (out) and wait for spindle to stop rotating (START/ STOP lamp extinguished).
2. Remove disk cartridge.
3. Set main circuit breaker to off position.
4. Remove left-hand side skin
5. Remove module under cover.
6. Remove static eliminator (Figure 6Q-4) by removing one screw.

REPLACEMENT

1. Install replacement static eliminator.
2. Adjust static eliminator for contact with spindle shaft.
3. Perform Static Eliminator Check, procedure Q27.
4. Install module under cover.
5. Install cabinet side skin.

Q13 SECTOR RING R & R

REMOVAL

1. Depress START/ STOP switch to STOP (out) and wait for spindle to stop rotating (START/ STOP lamp extinguished).
2. Set main circuit breaker to off position.
3. Remove left-hand side skin.
4. Remove transducer assembly mount (see Figure 6Q-4) by removing one screw (note orientation of sector option).
5. Remove static eliminator and its mounting bracket (see Figure 6Q-4).
6. Remove sector ring (see Figure 6Q-4) by removing two screws.

REPLACEMENT

1. Install replacement sector ring.
2. Install static eliminator and bracket.
3. Install transducer and mount.
4. Perform Fixed Disk Index/ Sector Transducer Adjustment, procedure Q29.
5. Adjust static eliminator for contact with spindle shaft.
6. Perform Static Eliminator Check, procedure Q27.
7. Install module under cover.
8. Install cabinet side skin.

Q14 CARTRIDGE—ON SWITCH R & R

REMOVAL

1. Depress START/ STOP pushbutton to STOP (out) and wait for spindle to stop rotating (START/ STOP lamp extinguished).
2. Remove top cover by lifting cover straight up.
3. Remove disk cartridge.
4. Set main circuit breaker to off position.
5. Remove electronics cover.
6. Remove power supply cover and disconnect A1P5. (see figure 6Q-6)
7. Disconnect two ground straps from front panel.

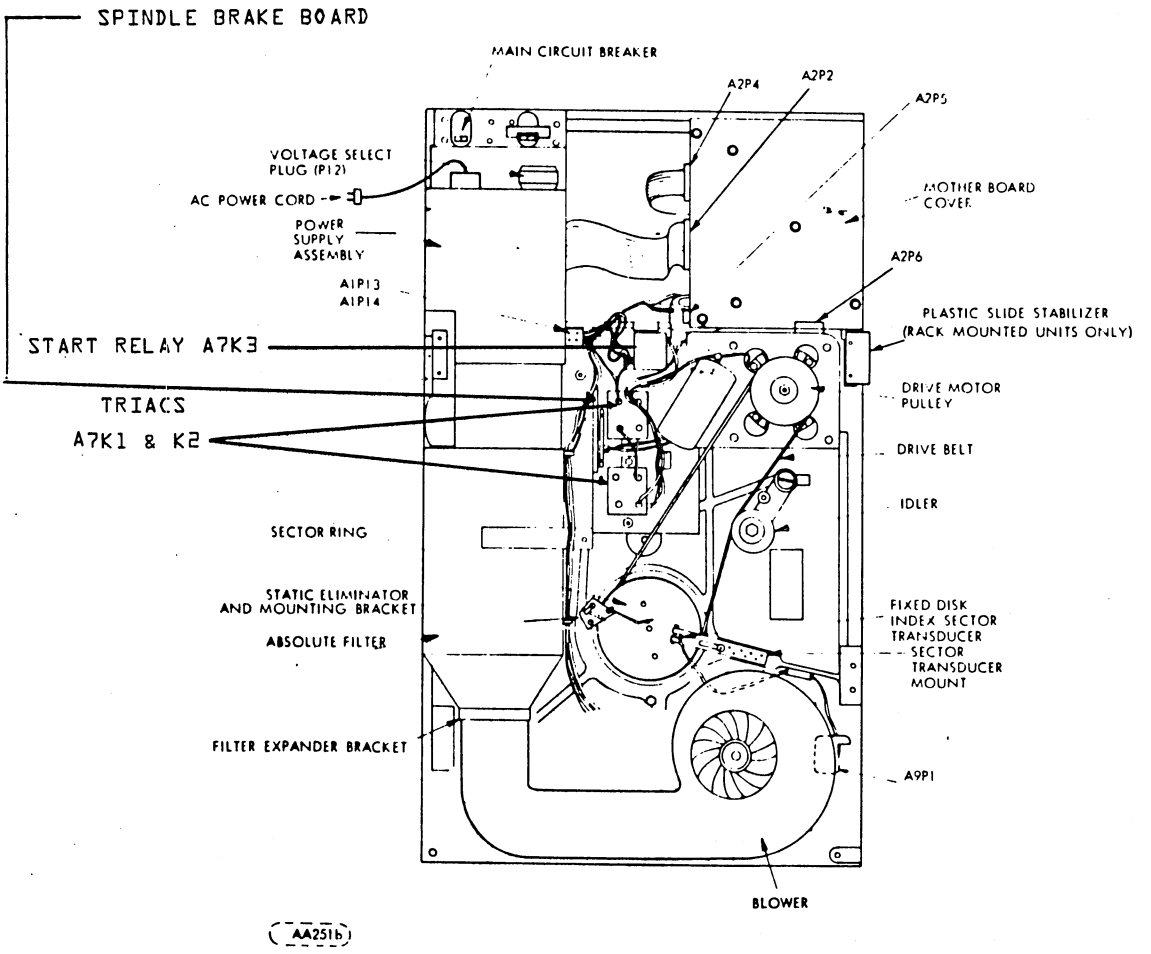

Figure 6Q-4. Module Locator (Below Deck)

8. Remove front panel by loosening two screws at bottom of panel and removing two screws on each side of panel (see Figure 6Q-2).

9. Remove the three screws from inside cartridge receiver.

10. Lift the cartridge receiver up until connector A9P2 can be unplugged (see Figure 6Q-2). After A9P2 is unplugged further remove cartridge receiver.

CAUTION

While lifting cartridge receiver be extremely careful to avoid damage to the fixed disk.

11. Disconnect wires from cartridge on switch.

12. Remove two screws, washers and nuts securing switch assembly to hold-down arm and remove switch. (reference Figure 6Q-5).

REPLACEMENT

1. Install replacement switch.
2. Close hold-down arms.
3. Check switch status with multimeter set on RX1 scale. Indication should be open circuit.
4. With disk cartridge installed, check switch status with multimeter set to RX1 scale. Meter should indicate zero ohms.
5. If switch does not read zero ohms, adjust as follows:
   a. Loosen hold-down arm adjustment screws (figure 6Q-5).
   b. Adjust hold-down arm for contact with cartridge disk cover.
   c. Tighten adjustment screws.
6. Check switch status with multimeter for zero ohms. If switch does not indicate zero ohms, replace switch.
7. Connect wires to switch.
8. Manually override solenoid (see figure 6Q5) and open hold-down arms.
9. Install cartridge receiver by aligning it on the two small pins on the deck and connecting A9P2.

CAUTION

While installing cartridge receiver be extremely careful to avoid damage to fixed disk.

10. Fasten cartridge receiver with three screws.
11. Install front panel and ground straps.
12. Install electronics cover.
13. Install top cover (base cabinet only).

Q15 DISK BRUSH ASSEMBLY R & R

REMOVAL

1. Depress START/ STOP pushbutton to STOP (out) and wait for spindle to stop rotating (START/ STOP lamp extinguished).
2. Remove top cover by lifting cover straight up.
3. Remove disk cartridge.
4. Set main circuit breaker to off position.
5. Remove electronics cover.
6. Remove power supply cover and disconnect A1P5. (see figure 6Q-6)
7. Disconnect two ground straps from front panel.

8. Remove front panel by loosening two screws at bottom of panel and removing two screws on each side of panel (see Figure 6Q-2).

9. Remove the three screws from inside cartridge receiver.

10. Lift the cartridge receiver up until connector A9P2 can be unplugged (see Figure 6Q-2). After A9P2 is unplugged further remove cartridge receiver.

CAUTION

While lifting cartridge receiver be extremely careful to avoid damage to the fixed disk.

11. Disconnect A1P3 and A1P7. (reference figure 6Q-6)
12. Disconnect wires from brush retract switch (see Figure 6Q-5).

13. Remove three mounting screws from the brush assembly. One screw is countersunk.

14. Remove brush assembly.

REPLACEMENT

1. Install new brush assembly with the three mounting screws.

NOTE

Verify that brushes are full retracted for the following check.

2. With a multimeter set on RX1 scale check that switch actuates when brushes are clear of disk area.

3. If switch actuation does not occur as indicated in previous step, replace switch.

4. Reconnect wires to brush retract switch.

5. Install cartridge receiver by aligning it on the two small pins on the deck and connecting A9P2.

CAUTION

While installing cartridge receiver be extremely careful to avoid damage to fixed disk.

6. Fasten cartridge receiver with three screws.

7. Install front panel and ground straps.

8. Connect A1P3 and A1P7. (reference figure 6Q-6)
9. Install power supply cover and reconnect A1P5. (reference figure 6Q-6)

10. Install electronics cover.

11. If necessary mark up label on cartridge receiver showing brush alignment when full retracted.

12. Install top cover

Q16 BRUSH MOTOR R & R

REMOVAL

1. Perform removal steps 1 through 11 of Disk brush removal, procedure Q15.

2. Remove the two mounting screws from the motor.

3. Remove brush motor.

REPLACEMENT

1. Install new brush motor. Insure brushes are fully retracted. Turn motor as necessary until mounting holes are aligned and brushes are fully retracted. Brush indicator should align with indicator on cartridge receiver.

2. Perform replacement steps 3 through 10 of Disk brush removal and replacement, procedure Q15, to complete installation.

Q17 SPINDLE DRIVE MOTOR ASSEMBLY R & R

REMOVAL

1. Depress START/ STOP switch to STOP (out) and wait for spindle to stop rotating (START/ STOP lamp extinguished).

2. Set main circuit breaker to off position.

3. Disconnect unit from main power source.

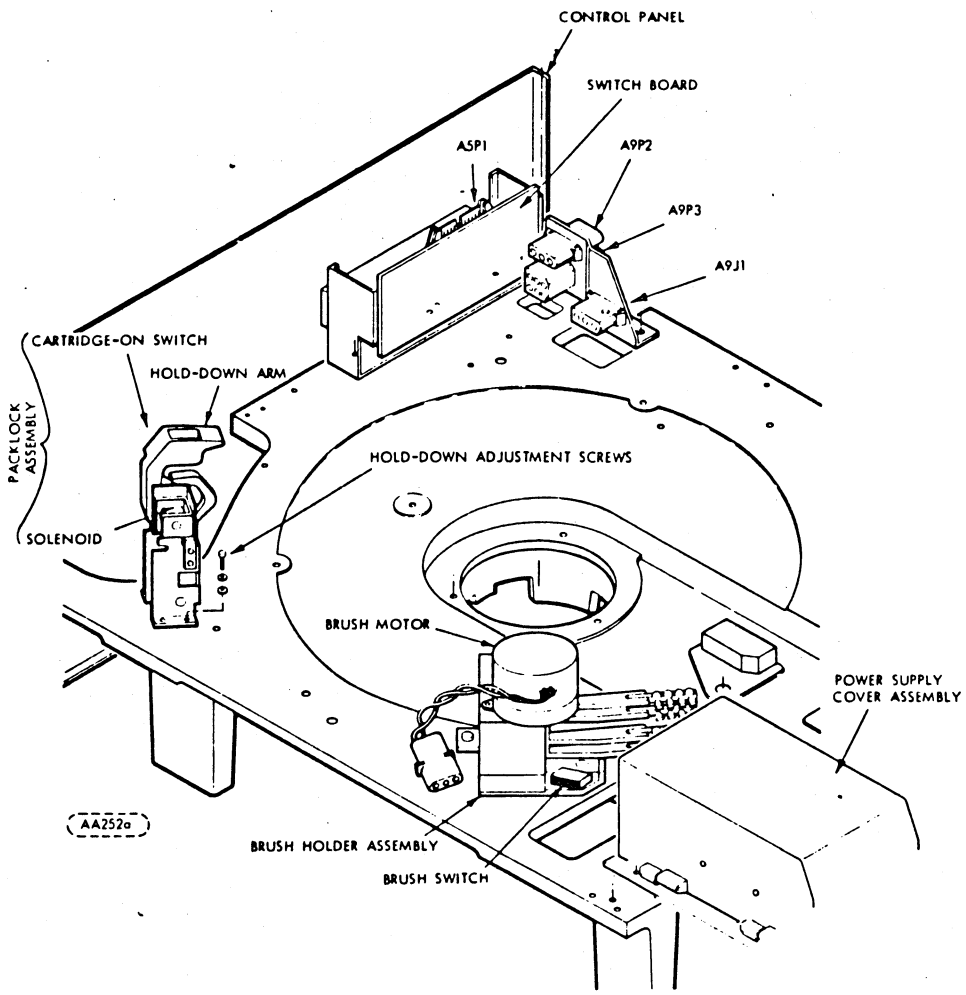

Figure 6Q-5. Packlock and Brush Assemblies

CAUTION

Live voltages are present in the area of the drive motor even when main circuit breaker is off. Failure to disconnect or turn off main power source may result in injury to service personnel.

4. Remove both cabinet side skins.

5. Remove module under cover.

6. Disconnect A2P5, A1P13 and A1P14 (Figure 6Q-4) from power supply.

7. Remove drive belt procedure Q7.

CAUTION

Do not use rubber isolation washers between motor deck and plate.

8. Support motor assembly to prevent it from falling and remove four mounting screws (see Figure 6Q-1).

9. Carefully lower drive motor assembly out of unit.

10. Loosen motor pulley set screw and remove pulley from shaft.

REPLACEMENT

1. Install pulley on replacement drive motor assembly. Apply Loctite Grade C, to pulley set screw and torque to 20 in/lbs. Pulley must be 1/16 inches above motor plate.

2. Install replacement drive motor assembly. Insure that rubber isolation washers are on all mounting screws on both sides of motor plate.

3. Install drive belt. {procedure Q7}

4. Connect A2P5, A1P13 and A1P14. {reference figure 6Q-4}

5. Check resistance between drive motor plate and module casting. If dc ground is connected to ac ground, resistance should be less than 1 ohm. If dc ground is isolated from ac ground, resistance should be greater than 1000 ohms.

6. Install module under cover.

7. Install cabinet side skins.

8. Connect unit to main power source.

Q18 CARD CAGE PRINTED CIRCUIT BOARD R & R

1. Depress START/ STOP switch to STOP (out) and wait for spindle to stop rotating (START/ STOP lamp extinguished).

2. Set main circuit breaker to off position.

3. Open top cover

4. Remove electronics cover.

5. Remove clamp from card cage cover.

6. Remove card cage cover.

7. Using card extractor remove required circuit board. Do not set any option switches (I/O, Control, Sector and Data Recovery board). Set option switches on replacement board to same settings. {Reference figure 6Q7}

NOTE

If I/O Board is to be replaced, use procedure Q31.

If R/W/E Board is replaced, head connectors must be disconnected and two resistor modules must be removed from old board and installed in new one.

CAUTION

Insure head cables are dressed such that the voice coil does not touch any cable when heads are loaded and extended to last track.

8. Carefully install replacement board, insuring that all pins are engaged before completely installing board.

9. Install card cage cover and clamp.
10. Install electronics cover.

Q19 POWER SUPPLY R & R

REMOVAL

1. Depress START/ STOP switch to STOP (out) and wait for spindle to stop rotating (START/ STOP lamp extinguished).
2. Set main current breaker to off position.
3. Open top cover
4. Remove electronics cover.
5. Open power supply cover assembly.

CAUTION

Live voltages are present in the area of the drive motor even when main circuit breaker is off. Failure to disconnect or turn off main power source may result in injury to service personnel.

6. Remove ac line cord from power source (see Figure 6Q-4).
7. Disconnect A1P5 and remove power supply cover. (see figure 6Q-6)
8. Disconnect A1P2, A1P13 and A1P14 (see Figure 6Q-4).
9. Disconnect A1P2, A1P3 and A1P7 (see Figure 6Q-6).
10. Disconnect ribbon cable A2P2 from mother board (see Figure 6Q-4).
11. Disconnect ground strap to frame.
12. Remove four screws holding power supply in place.
13. Remove power supply.

REPLACEMENT

1. Install new power supply so that mounting holes are aligned.

CAUTION

Insure gasket between power supply and absolute filter is properly aligned. If not properly aligned, air flow can be restricted causing damage to power supply.

2. Reverse removal procedure to complete installation.

Q20 PIGGYBACK POWER BOARD R & R

REMOVAL

1. Depress START/ STOP switch to STOP (out) and wait for spindle to stop rotating (START/ STOP lamp extinguished).
2. Open top cover.
3. Set main current breaker to off position.
4. Remove electronics cover.
5. Open power supply cover assembly.

CAUTION

Live voltages are present in the area of the drive motor even when main circuit breaker is off. Failure to disconnect or turn off main power source may result in injury to service personnel.

6. Disconnect A1P5 and remove power supply cover. (see figure 6Q-6)
7. Disconnect A1P1, A1P2, A1P3, A1P4 and A1P7 (see Figure 6Q-6).
8. Remove DC grounding screw noting assembly configuration.
9. Remove screw and insulating washer from wind tunnel located between relay K1 and power board #2.
10. Remove board assembly being careful not to lose spacers located under ground option (corner of board assembly).

REPLACEMENT

1. Install new board assembly.
2. Reverse removal procedure to complete installation.

Q21 CARD CAGE/MOTHER BOARD R & R

REMOVAL

1. Depress START/ STOP switch to STOP (out) and wait for spindle to stop rotating (START/ STOP lamp extinguished).
2. Open top cover
3. Set main circuit breaker to off position.
4. Disconnect unit from main power source.

CAUTION

Live voltages are present near the underside of the card cage area. Failure to disconnect or turn off main power source may result in injury to service personnel.

5. Remove electronics cover.
6. Disconnect I/O connector ribbon cables.
7. Remove four screws holding I/O Board to card cage and remove Board. Disregard this step if card cage is only removed to facilitate other removal and replacement procedures.
8. Remove card cage cover and clamp and quadraclip from head connectors on R/W/E board (see figure 6Q-7).
9. Disconnect head connectors.
10. Remove rear cabinet skin.
11. Disconnect A2P2, A2P4, A2P5 and A2P6 from mother board (see Figure 6Q-4).
12. Disconnect ground strap from deck plate.
13. Remove three screws securing card cage and remove card cage.
14. Using card extractor, remove all boards.
15. Remove the 5 screws holding the mother cover and board together. Watch for fiber washer.
16. Separate mother cover and board from card cage. Do not lose star washers.

REPLACEMENT

1. Attach mother cover and board to card cage assembly. Be careful not to overtighten, plastic bracket strips out easily.
2. Install all circuit boards.
3. Install card cage with three mounting screws.
4. Install connectors removed in steps 9 and 11.

CAUTION

Insure head cables are dressed such that the voice coil does not touch any cable when heads are loaded and extended to last track.

5. Install quadraclip and head cable clamp.
6. Replace I/O Board if removed in Step 7. (Removal procedures).
7. Reconnect I/O Ribbon Cables.
8. Install ground strap.
9. Install card cover and clamp.
10. Install electronics cover.
11. Connect unit to main power source.
12. Close top cover

Q22 BLOWER MOTOR ASSEMBLY R & R

REMOVAL

1. Depress START/ STOP switch to STOP (out) and wait for spindle to stop rotating (START/ STOP lamp extinguished).
2. Set main circuit breaker to off position.

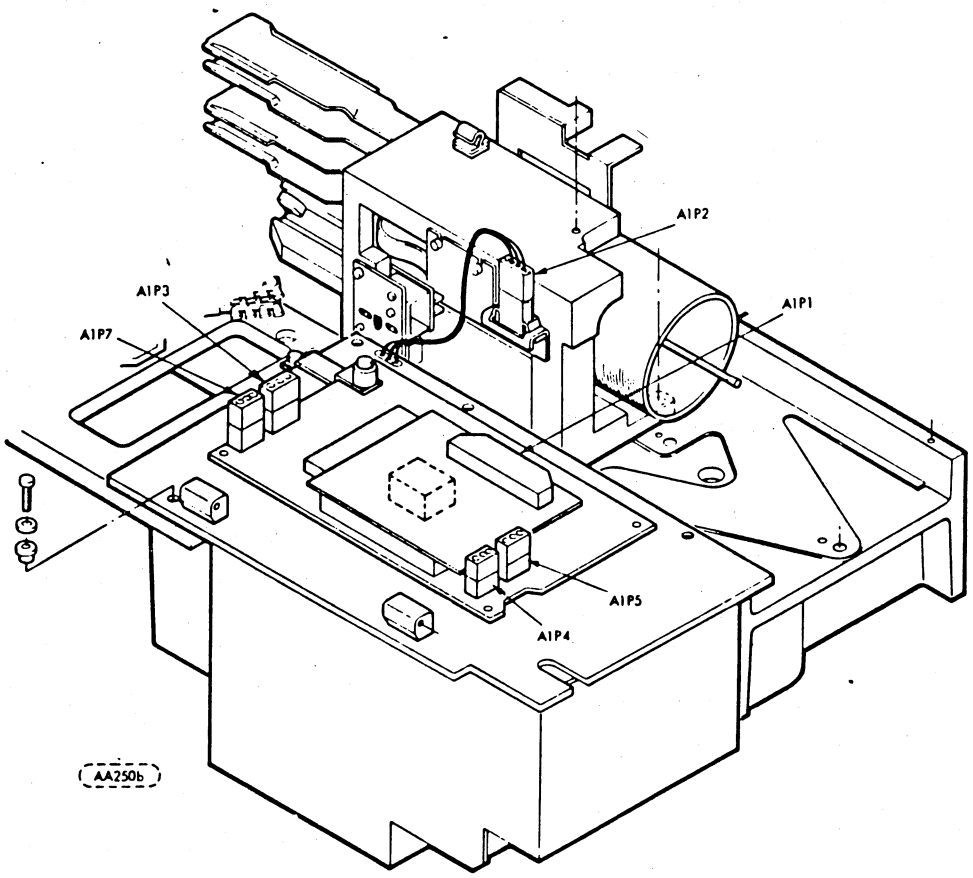

Figure 6Q-6. Power Supply Assembly

3. Remove top cover by lifting cover straight up.
4. Remove front door and both side cabinet skins.
5. Disconnect ground straps from front panel.
6. Remove front panel by loosening two screws at bottom of panel and removing two screws on each side of panel (see Figure 6Q-2).
7. Remove the pre-filter and disconnect A1P13 (Figure 6Q-4) from power supply assembly.
8. Remove filter expander bracket and absolute filter (Figure 6Q-1).
9. Remove nuts from studs that secure module to base frame (two nuts are in pre-filter area and one nut is below actuator magnet).
10. Unlace motor harness.
11. Support blower assembly to prevent it from falling and remove three screws securing blower assembly.
12. Remove blower assembly.

REPLACEMENT

1. Install replacement blower motor assembly.
2. Reverse the removal procedure to complete the installation.

NOTE

Slightly tighten the three screws securing the blower motor then align the air chute with the absolute filter. Finish tightening the blower motor screws (do not over compress rubber washers on the three screws).

Q23 SWITCH BOARD R & R

REMOVAL

1. Depress START/STOP switch to STOP {out} and wait for spindle to stop rotating {START/STOP lamp extinguished}.
2. Remove disk cartridge.
3. Set main circuit breaker to off position.
4. Remove top cover by lifting cover straing straight up.
5. Remove electronics cover.
6. Disconnect two ground straps from front panel. {Remove screws at the front panel}.
7. Remove the front panel by removing two phillips head screws at each side and loosening two screws at the bottom.
8. Remove three screws from inside cartridge receiver.
9. Lift the cartridge receiver up until connector A9P2 can be unplugged {see figure 6Q-2}. After A9P2 is unplugged further remove cartridge reciever.

CAUTION

While lifting cartridge receiver be extremely careful to avoid damage to the fixed disk.

10. Remove four hold sown screws on the switch board.
11. Disconnect 3M connector and remove switch board.

REPLACEMENT

1. Repeat removal steps 1 through 12 in reverse order.

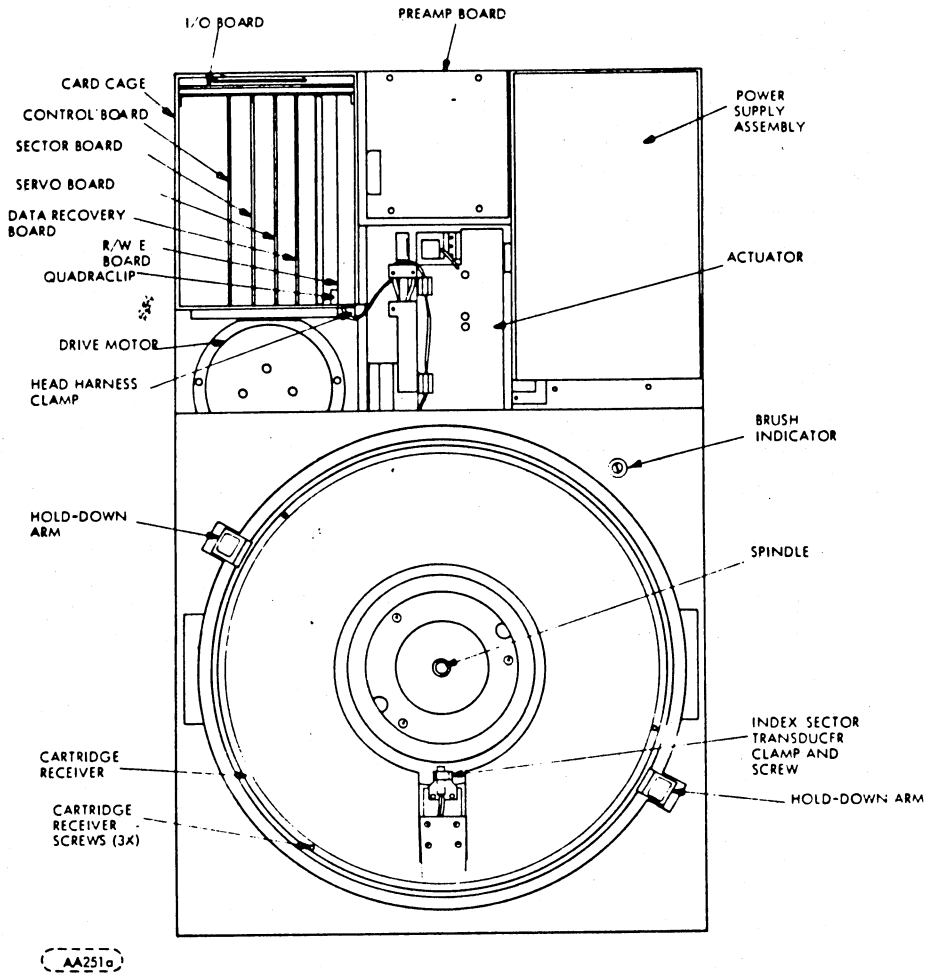

Figure 6Q-7. Module Location (Above Deck)

Q24 TEMPERATURE STABILIZATION CHECK AND ADJUSTMENT

1. If disk unit has not been operating, or a CE disk cartridge has been installed, allow unit to exercise for twenty minutes. For an additional ten minutes, allow unit to sit in a heads loaded, unit ready condition. Perform this with electronic cover on. Perform needed checks and adjustments or;
2. If disk unit has been operating, allow unit to sit in a heads loaded, unit ready condition for ten minutes (with electronic cover on), before proceeding with checks and adjustments.

Q25 TRACK INDICATOR CHECK AND ADJUSTMENT

NOTE

This procedure should only be performed after the disk drive is know to be in a fault free state.

1. Open top cover.
2. Remove electronics cover.
3. Set main circuit breaker to on position.
4. Install disk cartridge.
5. Depress START/STOP switch to START (in) and wait for unit to complete FIRST SEEK.
6. Check that zero marks on fixed and moveable sections of track indicators (figure 6Q-8) are lined up.
7. If marks are not aligned, loosen fixed section of track indicator and position for alignment with moveable section.
8. Check that gap between the fixed and moveable sections of track indicator is 0.1 to 0.3 inches.
9. Install electronics cover.

Q26 CARTRIDGE-ON SWITCH CHECK AND ADJUSTMENT

NOTE

There are two cartridge-on switches, one on each Hold-Down arm. Perform cartridge-on switch removal and replacement, procedure Q14, except for actual removal of switches.

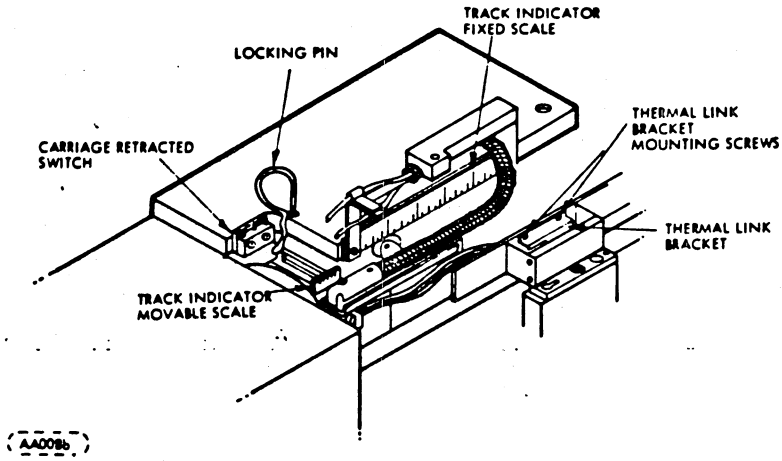

Figure 6Q-8. TRACK INDICATOR

Q27 STATIC ELIMINATOR CHECK

1. Depress START/ STOP switch to STOP (out) and wait for spindle to stop rotating (START/ STOP lamp extinguished).
2. Remove disk cartridge.
3. Open top cover.
4. Set main circuit breaker to off position.
5. Using multimeter check for five ohms or less between module ground and side of rotating spindle cone while turning spindle by hand.
6. If resistance is above five ohms clean static eliminator and perform step 5 again.
7. If multimeter indicates no continuity or high resistance after cleaning replace static eliminator by following Static Eliminator Removal and Replacement procedure.

Q28 DISK BRUSH SWITCH CHECK AND ADJUSTMENT

Perform disk brush assembly removal and replacement , procedure Q15, except for actual removal of brush assembly.

Q29 FIXED DISK INDEX/SECTOR TRANSDUCER CHECK AND ADJUSTMENT

1. Set main circuit breaker to off position.
2. Remove cabinet skin from left side .
3. Remove module bottom cover.
4. Check clearance between transducer top and sector ring. Clearance should be between 0.010 $^{+.003}_{-.000}$ inch. If clearance is out of tolerance, loosen transducer clamp and slide transducer in or out to adjust for proper clearance.
5. Tighten transducer clamp.
6. Install side skin removed in step 2.

Q30 CARTRIDGE DISK DRIVE CONTROLLER REPLACEMENT/ INSTALLATION

1. Press the STOP and then the MASTER CLEAR switches on the Operators Panel. Power off the CDD.
2. Open the right side panel of the processor cabinet for processor 1 or left side panel for processor 2.
3. Remove the cover plate at the front of the processor chassis by releasing the two captive retaining latches.
4. Refer to table 4A-3 for location of the controller. If a controller is presently installed remove it from the processor chassis using the extractor tool attached to the inside of the cover plate.
5. Verify that the equipment code and all of the other jumpers are set to their normal operating positions on the controller. {Refer to section 4Q for location and setting}
6. Position the controller in the processor chassis in its assigned position so that the component side is facing left.
7. Seat the controller by applying firm pressure at the top and bottom of the controller. The controller is properly installed only when fully seated. {If available an insertion tool may be used}
8. Replace the extractor tool, cover plate and close the access panel.
9. Press the Master Clear switch on the operators panel.
10. Continue testing as outlined in DDLT's.

Q31 I/O BOARD REMOVAL AND REPLACEMENT

REMOVAL

1. Depress START/STOP pushbutton to STOP {out} and wait for spindle to stop rotating {START/STOP lamp extinguished}.
2. Remove top cover by lifting cover straight up.
3. Remove disk cartridge.
4. Set main circuit breaker to off position.
5. Remove electronics cover.
6. Remove two screws securing the 3M cable strain relief bars.
7. Remove the strain relief bars.
8. Remove four Phillips head screws securing the connector mounting plate.
9. Release the two 3M connectors from the I/O board.
10. Remove connector A2P7.
11. Remove the I/O board.

REPLACEMENT

1. Repeat steps 1 through 11 of the removal procedure in reverse order.

Q32 SPINDLE BRAKE BOARD R & R

REMOVAL

1. Depress START/STOP switch to STOP {out} and wait for spindle to STOP rotating {START/STOP lamp extinguished}.
2. Set the main circuit breaker to the off position.
3. Remove the left-hand side skin.
4. Remove the module under cover by removing three phillips head screws.
5. Locate the spindle brake board and remove two phillips head screws securing the hold down bracket. {Figure 6Q-4}
6. Remove the spindle brake board.

REPLACEMENT

1. Repeat steps 1-6 of the removal procedure in reverse order.

Q33 START RELAY R & R

REMOVAL

1. Depress START/STOP switch to STOP (out) and wait for spindle to stop rotating (START/STOP lamp extinguished).
2. Set the main circuit breaker to the off position.
3. Remove the left-hand side skin.
4. Remove the module under cover by removing three phillips head screws.
5. Locate the start relay and release the spring clip. (Figure 6Q-4)
6. Remove the start relay.

REPLACEMENT

1. Repeat steps 1-6 of the removal procedure in reverse order.

Q34 TRIAC ASSEMBLY R & R

REMOVAL

1. Depress START/STOP switch to STOP (out) and wait for spindle to stop rotating (START/STOP lamp extinguished).
2. Set the main circuit breaker to the off position.
3. Remove the left-hand side skin.
4. Remove the module under cover by removing three phillips head screws.
5. Locate the Triac assemblies, remove and identify all wires.
6. Remove the Triacs by releasing the hold down nuts.

REPLACEMENT

1. Repeat steps 1-6 of the removal procedure in reverse order.

To inspect the Cartridge Disk subsystem cable, perform the following:

Verify that the interface cable between the processor controller board and the disk driver are properly connected per the connector identification tag and that they are fully seated.

Q35 CONTROLLER TO DISK DRIVE CABLE INSPECTION AND REPLACEMENT

To replace the controller to disk drive cable, perform the following:

1. Note the DDLT section that prompted this action (sheet and action number).
2. Power off the CPU via the front panel power off switch.
3. Remove the rear skin from the processor cabinet.
4. Disconnect the three controller/disk drive cable connectors from the backplane.
5. Remove the "U" clamps securing the controller/formatter cable to the cable entry tray.
6. Raise the cover of the first cartridge disk drive.
7. Remove the cable from the disk drive.
8. Remove the controller/formatter cable.
9. Install a new cable by performing steps 1-8 in reverse order.

MAGNETIC TAPE TRANSPORT PROCEDURES

CONTENTS

Procedure		Page
6R1	Magnetic Tape Transport Cleaning	6R-1
6R3	Subsystem Cable Inspection	6R-4
6R4	Power Inspection and Checks	6R-4
6R5	Tape Loading Procedure	6R-10
6R6	Transport Logic Printed Circuit Board Replacement	6R-11
6R7	Machine Reel Power Amplifier Replacement	6R-14
6R8	File Reel Power Amplifier Replacement	6R-14
†6R9	Pneumatic Regulator Board Replacement	6R-14
6R10	Vacuum Relay Replacement	6R-16
6R11	Formatter Power Supply Replacement	6R-18
6R12	Transport Power Supply Replacement	6R-21
†6R13	Blower Assembly Removal	6R-21
†6R14	Blower Assembly Vacuum Adjustment	6R-23
†6R15	Upper Tape Tachometer {Machine Reel} Removal/Replacement	6R-25
†6R16	Machine Reel Tape Tachometer Alignment	6R-27
†6R17	Lower Tape Tachometer {File Reel} Removal/Replacement	6R-27
†6R18	File Reel Tape Tachometer Alignment	6R-28
6R19	EOT/BOT Sensor Assembly Removal/Replacement	6R-28
†6R20	EOT/BOT Assembly Alignment	6R-29
6R21	Fiber Optic Light Bulb Removal	6R-30
6R22	Operators Panel Light Bulb Removal/Replacement	6R-30
6R23	File Protect Sensor Assembly Removal/Replacement	6R-31
†6R24	File Hub Removal/Replacement	6R-34
6R25	Controller Printed Circuit Board Replacement	6R-34
6R26	Operators Panel Removal/ Replacement	6R-35
6R27	Power Distribution Box Components	6R-36
6R28	Triac Power Switch Replacement	6R-36
6R29	AC Line Filter Replacement	6R-38
6R30	AC Power up Control No.2 Circuit Board Replacement	6R-38
6R31	Power Distribution Box Circuit Breaker Check/Replacement	6R-39
6R32	Power Distribution Box Switch Check/Replacement	6R-39
6R33	Resistor Assembly, 2K , 50W Replacement	6R-40
6R34	Loop Column Sensor Replacement	6R-41
6R35	Interlock Check and Replacement	6R-42
†6R36	Read/Write Head Replacement	6R-42
6R37	Power On/Off Switch Replacement	6R-43
6R39	Fiber Optics Replacement	6R-44
6R40	Fuse Check and Replacement	6R-48
6R41	Formatter Indicator Replacement	6R-48
6R42	Formatter Fuse Checks	6R-48
6R43	Formatter Logic Board Replacement	6R-51
6R45	Transport Unit Select and Stop Jumper Checks	6R-49
6R46	Controller/Formatter Cable Replacement	6R-49
†6R47	Differential Pressure Switch Replacement	6R-50

†Requires higher level of support

Figure		Page
6R-1	Magnetic Tape Transport Front View	6R-2
6R-2	Magnetic Tape Transport, Tape Load Path	6R-3
6R-3	Magnetic Tape Transport Latch Screws	6R-6
6R-4	Controller to Formatter Cable Connections	6R-6
6R-5	Magnetic Tape Transport to Formatter Signal Cable Connections	6R-7
6R-6	Magnetic Tape Transport Backplane Connectors Locator	6R-8
6R-7	Formatter Backplane Locator	6R-10
6R-8	Transport Control Panel	6R-11
6R-9	Transport Logic Board Locator	6R-12
6R-10	Transport Power Amplifier Board Locator	6R-15
6R-11	Transport Pneumatic Assembly	6R-16
6R-12	Formatter Power Supply	6R-17
6R-13	Formatter Power Supply Grounding	6R-19
6R-14	Transport Power Supply	6R-20
6R-15	Transport Blower Assembly	6R-22
6R-16	Vacuum Guage Installation	6R-25
6R-17	Upper and Lower Tape Tachometer, Tape Head and EOT/BOT Sensor Detail	6R-26
6R-19	Machine Reel Tape Sensor Alignment	6R-28
6R-20	File Reel Tape Sensor Alignment	6R-29
6R-21	Fiber Optic Light Source and Differential Pressure Switch	6R-32
6R-22	Transport Operators Panel Indicators	6R-32
6R-23	File Protect Sensor Assembly and File Hub	6R-33
6R-24	Power Distribution Box Assembly	6R-37
6R-25	Formatter Logic Board Locator	6R-52

R1 MAGNETIC TAPE TRANSPORT CLEANING

The following procedures are used to inspect and clean the magnetic tape transport (figure 6R1 and 6R-2).

1. Using a cotton swab moisten with isopropyl alcohol (99 percent pure), clean the following areas (figure 6R-2):
   a. Tape cleaner - Ensure that all dirt particles are removed from the grooves.
   b. Loop column phototransistors - Remove all oxide build-up.
   c. Tape guide spring-loaded flanges - Push back the flange, and brush it clean. Remove all oxide build-up around the flange and the stainless steel post.
   d. End of tape/beginning of tape EOT/BOT sensor - Brush the grooves clean around the sensor to remove all oxide build-up.
2. Use a lint-free cloth (Kimwipe) moistened with isopropyl alcohol (99 percent pure), clean the following areas:
   a. Read/write/erase heads - Wipe head surfaces clean.
   b. Tape guides and tape cleaner - Wipe clean to remove dirt particles. Use a brush to loosen particles if necessary.
   c. Loop column glass - Wipe the glass clean.
   d. Tape tachometers - Wipe the tape tachometers clean.
   e. End of tape/beginning of tape sensor - Wipe the sensor prism clean.

CAUTION

Do not touch the outside diameter (tape contact surface) of the capstan with fingers. Use a screwdriver in the capstan shaft slot to rotate the capstan. Use a soft, lint-free wiper when handling the capstan.

   f. Capstan - While holding a moistened cloth against the capstan tape contact surface, insert a screwdriver into the slot on the end of the capstan shaft and rotate through several revolutions.
   g. Loop column bed - Wipe the loop column bed clean.

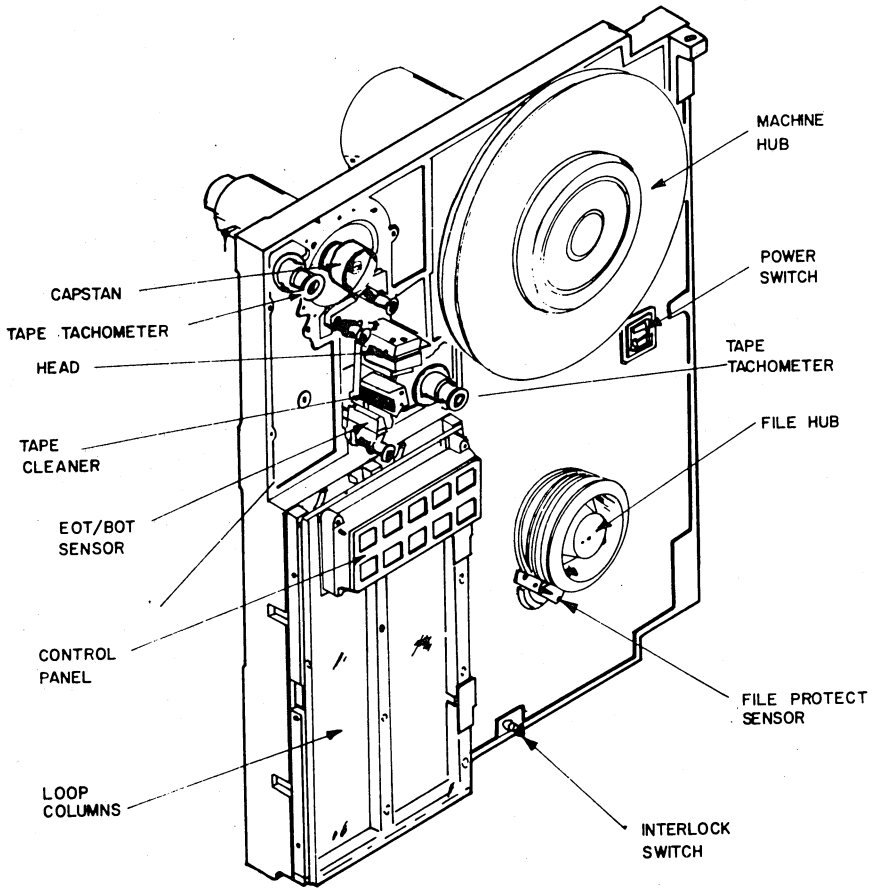

Figure 6R-1. Magnetic Tape Transport, Front View

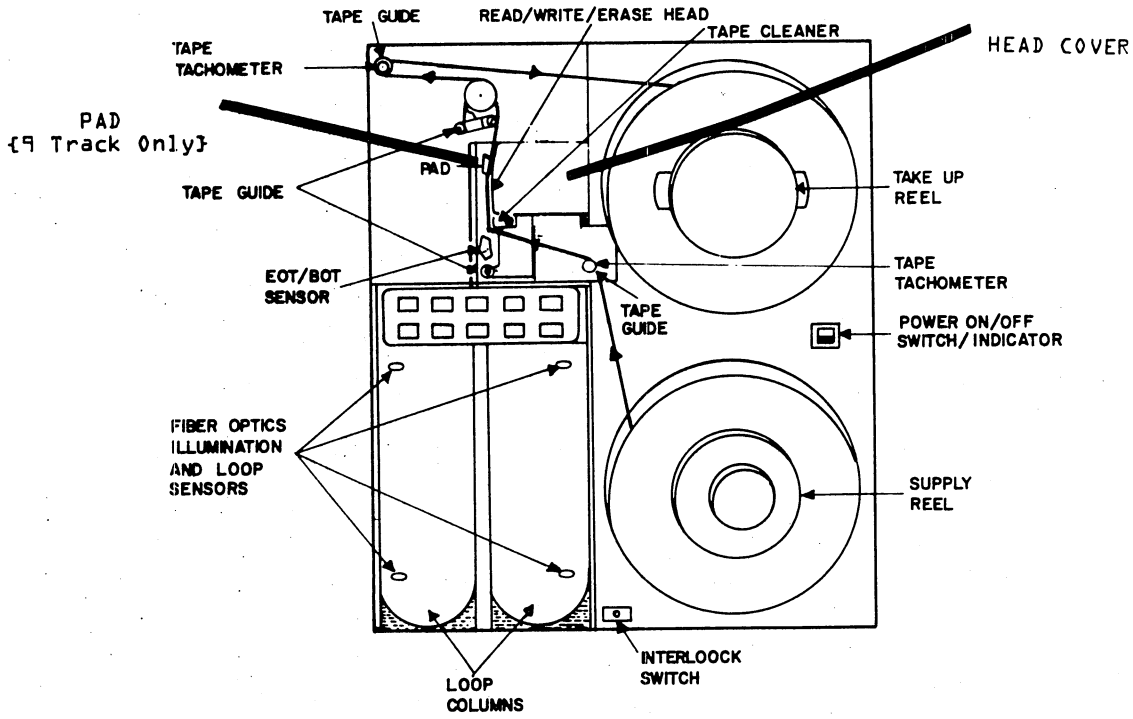

Figure 6R-2. Magnetic Tape Transport, Tape Load Path

3. Using a penlight, or equivalent, and a magnifying glass, inspect the following areas for oxide build-up or damage:
   a. Tape path - Check the head surfaces, guide post, and flanges for scratches, burrs, etc.
   b. Tape tachometers - Ensure free rotation without noise.
   c. Loop columns - Make sure the tape on the loop columns is not tearing.
   d. Reel flanges - Ensure the tape does not rub against the reel flanges.
4. Observe the tape tracking for the following:
   a. There is no visible side movement of the tape across the capstan when the tape is moved in the forward and reverse directions.
   b. There is no excessive rubbing of the tape on either reel side.
   c. There is no twisting or binding while the tape moves through the tape guides.

R3 SUBSYSTEM CABLE INSPECTION

To inspect the magnetic tape transport subsystem cable, perform the following:

1. Unlock and swing out the tape deck by turning the cabinet latch screws counter-clockwise (figure 6R-3).
2. Verify that all transport logic board cage backplane pin connectors are properly connected and fully seated (figure 6R-6).
3. Verify that the two cables (control and data) between the transport and the Formatter Backplane are properly connected and fully seated. (figure 6R-5)
4. Verify that the interface cable between the processor controller board and Formatter Backplane are properly connected per the connector identification tag and that they are fully seated (figure 6R-4).
5. Close the transport tape deck, and secure by turning the latch screw clockwise.

R4 POWER INSPECTION AND CHECKS

Before performing this procedure, the magnetic tape transport and Formatter must be connected to a compatible power source.

1. Press the power switch and observe the following:
   a. The power on switch should illuminate. If it does not, and the power is on, go to procedure 6R-37 Power On/Off Switch Replacement.
   b. The EOT/BOT indicator should illuminate.
   c. The loop column sensor lights should illuminate.
2. With a voltmeter, test the following voltages at the listed terminals (figure 6R-6).

Location	Voltage Test	Terminals +Probe	-Probe
Card cage backplane	-5 vdc	E1	E4
Card cage backplane	+5 vdc	E5	E1
Card cage backplane	-12 vdc	E1	E2
Card cage backplane	+12 vdc	E3	E1
Machine reel power amplifier (upper)	+40 vdc	E2	E1
Capstan power amplifier	+40 vdc	E2	E1
File reel power amplifier (lower)	+40 vdc	E3	E1

3. It the voltages are not present go to procedure

   6R-12 - Transport Power Supply Replacement.

4. Press the Formatter Power switch and observe that

   the power switch illuminates.

5. With a voltmeter, test the following voltages

   at the listed terminals. (figure 6R-7)

Location	Voltage Test Range	Terminals +Probe	-Probe
Backplane	+4.85 to 5.15	E3	E5
Backplane	+8.4 to 15.0	E4	E5

6. If the voltages are not present, go to procedure

   6R-11 - Formatter Power Supply Replacement

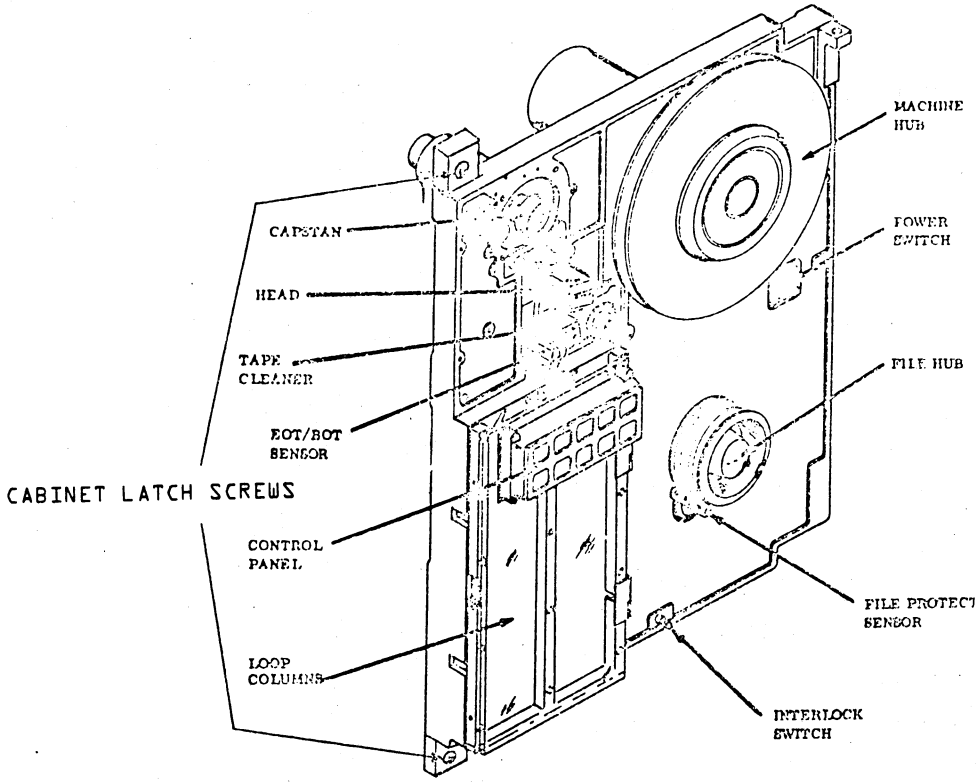

Figure 6R-3. Magnetic Tape Transport Cabinet Latch Screws

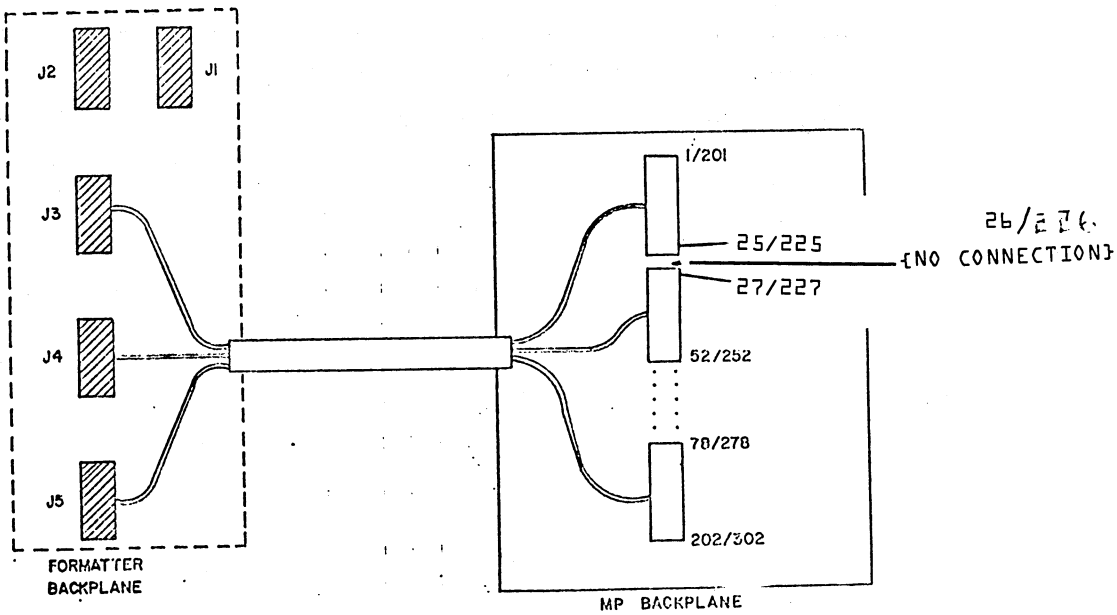

Figure 6R-4. Controller to formatter cable Connectors.

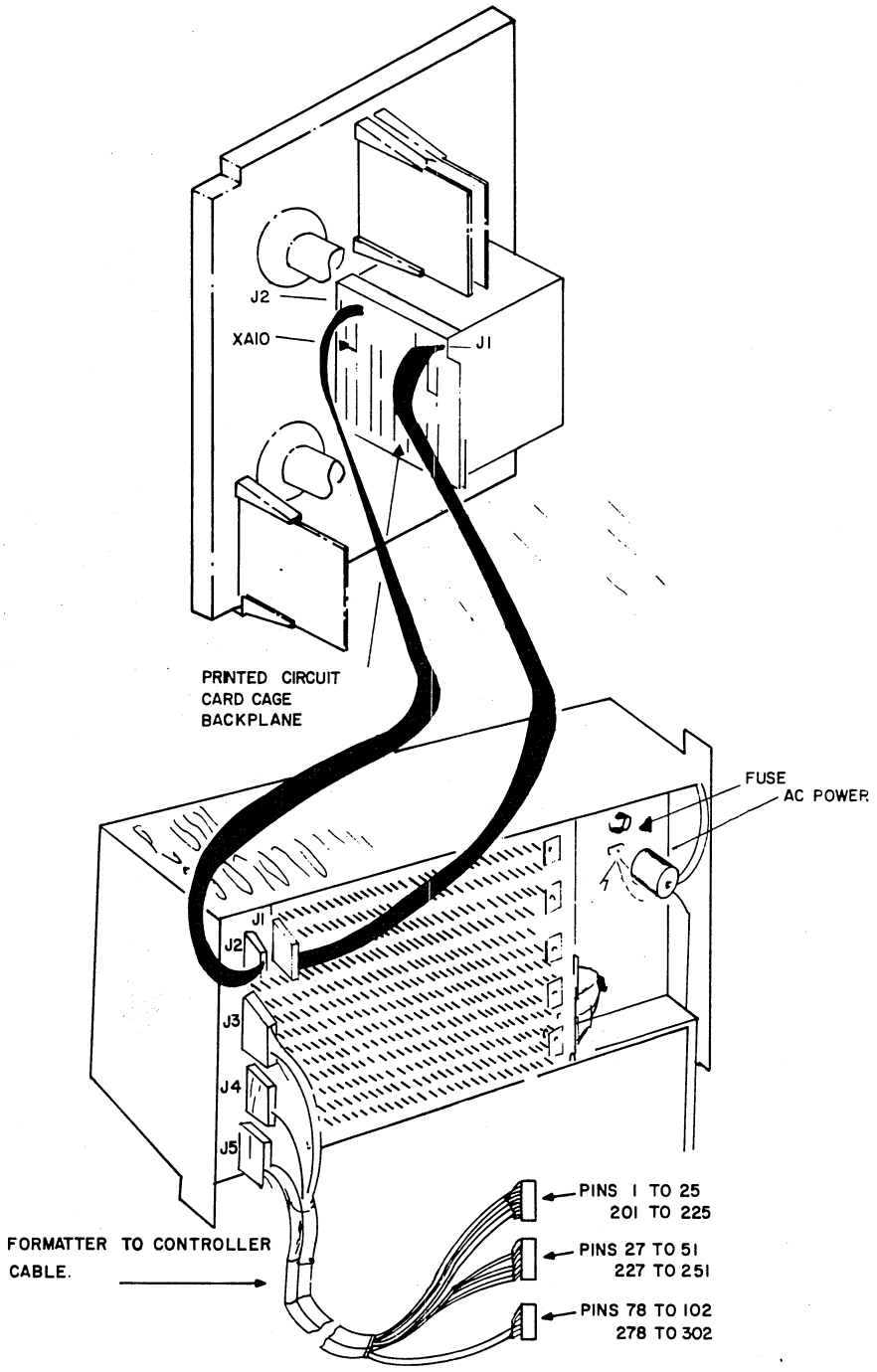

Figure 6R-5. Magnetic Tape Transport to Formatter Signal Cable Connection

Cables to Formatter or
from Tape Transport

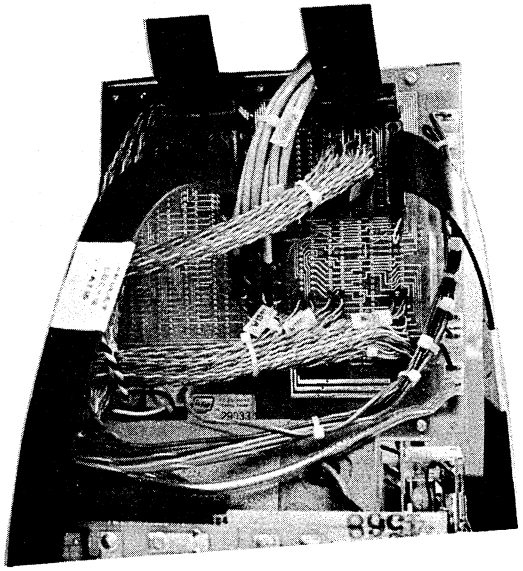

Cables to next Tape Transport

Figure 6R-6. Magnetic Tape Transport Backplane Connector Location.

THIS PAGE LEFT INTENTIONALLY BLANK

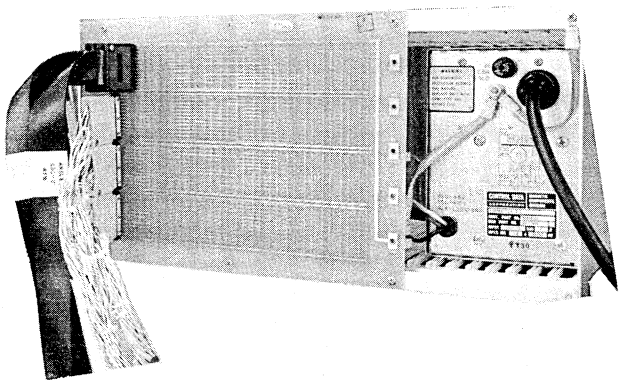

Cables from Magnetic Tape Transport Controller

Cables to first Tape Transport

Figure 6R-7. Formatter backplane connector location

R5 LOADING PROCEDURE

To load the magnetic tape transport, perform the following steps.

Tape Threading

1. Open the front door of the transport to permit access to the tape deck.
2. Pull out the cabinet door interlock switch (figure 6R-2).
3. Install the write enable ring within the inner surface cutout if a write operation is to be performed.

NOTE

The write enable ring is to be installed only if a write operation is to be performed. Ensure that valuable data has not been stored on the reel prior to a write operation.

4. Place the file reel onto the supply reel hub. Ensure that the file reel is fully seated against the supply hub face. Push the hub in to lock the reel in place.
5. Manually rotate the machine reel hub clockwise, and thread the tape (figure 6R-8).
6. Wind at least three full wraps of the tape onto the take-up reel.

7. With the tape threaded, depress the power switch (figure 6R-2) and close the front door. The power indicator will illuminate.

8. Touch the LOAD/REWIND touch control pad. The tape will load into the vacuum column and move forward until beginning of tape is reached. The BOT/EOT indicator will illuminate.

R6 LOGIC PRINTED CIRCUIT BOARD REPLACEMENT

To replace the magnetic tape transport logic printed circuit board, perform the following:

1. Note the DDLT that prompted this action (sheet and action number).
2. Unload the tape by touching CLEAR and then UNLOAD touch control pads. When the tape is rewound from the take-up reel, the magnetic tape transport may be placed in a power down condition by pressing the main power switch off. (figure 6R-8)

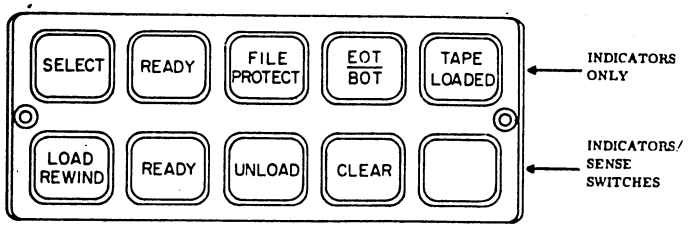

Figure 6R-8. Transport Control Panel

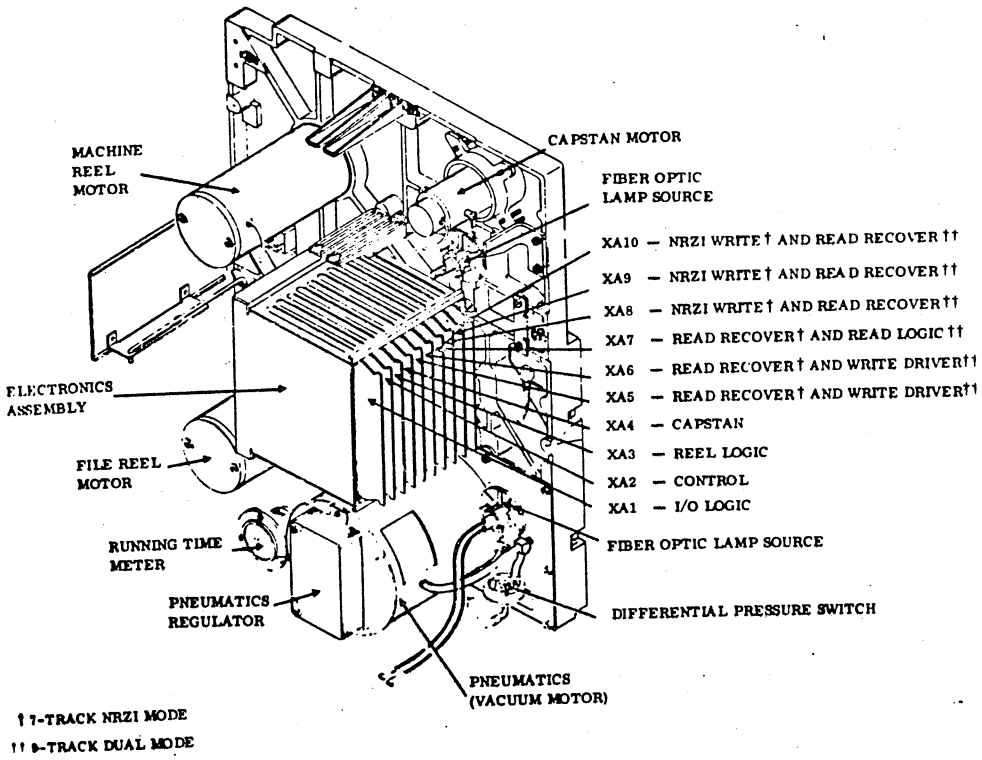

Figure 6R-9. Transport Logic Board Locator

3. Unlock and swing out the tape deck by turning the cabinet latch screws counter-clockwise. (figure 6R-3)

4. Locate the printed circuit board. (figure 6R-9).

5. Carefully pull out the old printed circuit board, identify the card location and magnetic tape transport serial number and log the information on the running time meter on a defective parts tag.

6. Visually verify that the spare printed circuit board is identical to the one removed and has the correct part number.

7. Insert the spare logic board in the card slot, component side to the tape deck, and push it into the card slot so that the board is completely seated into the backplane connector. Be sure the board is fully inserted (the board edges are flush together).

8. Swing the tape deck back into the housing rack and lock it.

9. Watch out for mechanical or electrical disconnects which could have been caused by swinging the tape deck in and out. See procedures R3 for cable inspection.

10. Power up the magnetic tape transport and load the tape (procedure R5).

11. Return to DDLT section that prompted this action.

NOTE

The printed circuit boards in locations 3 through 10 require electrical adjustments. If any of these boards are to be replaced, technical assistance and an oscilloscope are required to adjust the delay circuits using a tape exercise or computer program.

R7 MACHINE REEL POWER AMPLIFIER REPLACEMENT

To replace the machine reel power amplifier, perform the following:

1. Note the DDLT section that prompted this action (sheet and action number).
2. Unload the tape by touching CLEAR and then UNLOAD touch control pads. When the tape is rewound from the take-up reel, the transport may be placed in a power down condition by pressing the main power switch.
3. Unlock and swing out the tape deck by turning the cabinet latch screws counter-clockwise (figure 6R-3).
4. Locate the machine reel power amplifier board (figure 6R-10).
5. Disconnect and tag each cable as it is removed.
6. Remove the board.
7. Install a new board with the component side toward the machine reel motor.
8. Reconnect all cables disconnected in step 5 above.

R8 FILE REEL POWER AMPLIFIER REPLACEMENT

To replace the file reel power amplifier, perform the following:

The steps for this procedure are the same as those for procedure R7. Observe that the component side of the board is toward the file reel motor.

R9 PNEUMATIC REGULATOR BOARD REPLACEMENT

To replace the pneumatic regulator board, perform the following:

1. Note the DDLT section that prompted this action (sheet and action number).
2. Unload the tape by touching CLEAR and then the UNLOAD touch control pads. When the tape is rewound from the take-up reel, the transport may be placed in a power down condition by pressing the main power switch.
3. Unlock and swing out the tape deck by turning the cabinet latch screws counter-clockwise (figure 6R-3).
4. Remove the pneumatic voltage regulator shield (figure 6R-11).
5. Disconnect and label all wires removed from the regulator board.
6. Dismount the pneumatic regulator board and replace it with a new one. Verify that the frequency jumper is installed in the same way as the board that was removed.
7. Reconnect all wires removed in step 5.
8. Reinstall the cover.
9. Adjust according to procedure R14.

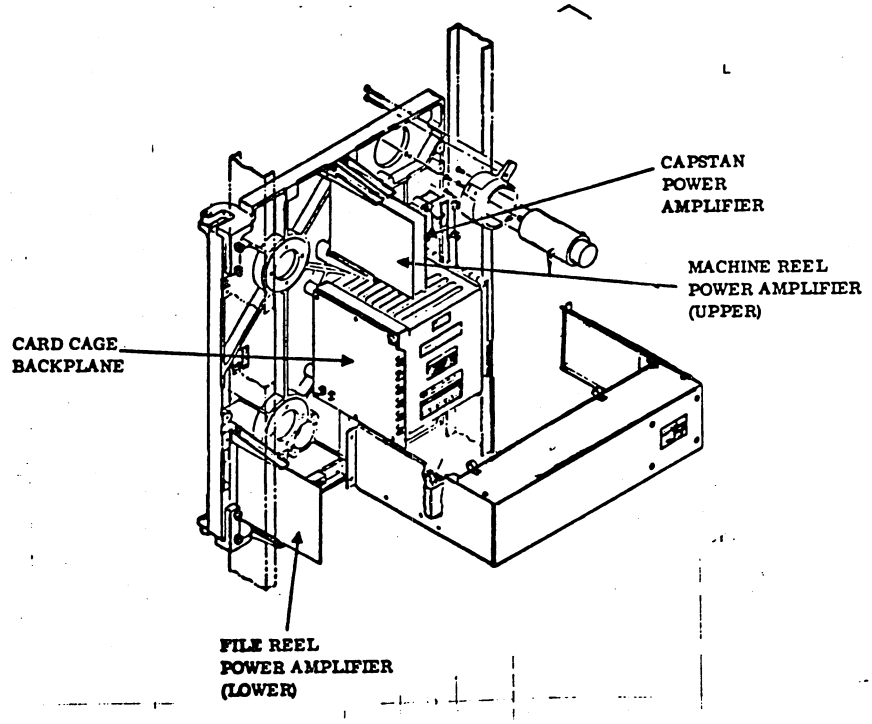

Figure 6R-10. Transport Power Amplifier Board Locator.

96768683-02 6R-15

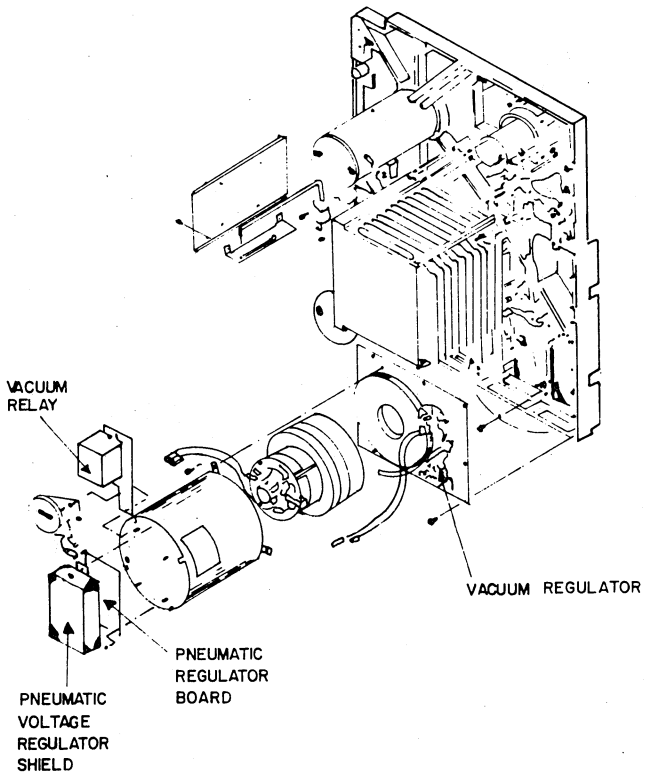

Figure 6R-11. Pneumatic Assembly Showing Vacuum Regulator and Vacuum Relay

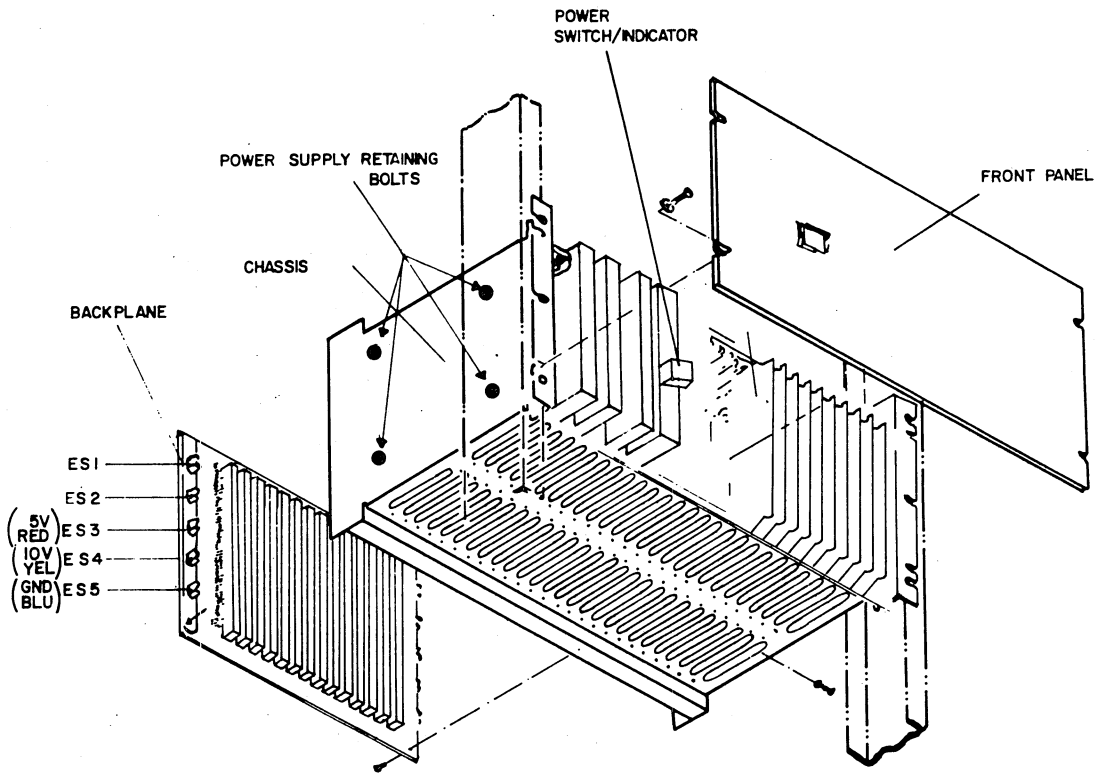

Figure 6R-12. Formatter Power Supply Replacement

R10 VACUUM RELAY REPLACEMENT

To replace the vacuum relay (figure 6R-11), perform the following:

1. Note the DDLT section that prompted this action (sheet and action number).
2. Unload the tape by touching CLEAR and then the UNLOAD touch control pads. When the tape is rewound from the take-up reel, the transport may be placed in a power down condition by pressing the main power switch.
3. Unlock and swing out the tape deck by turning the cabinet latch screws counter-clockwise (figure 6R-3).
4. Disconnect the vacuum relay; do not remove the wires.
5. Mount a new relay.
6. One at a time, disconnect the wires from the old vacuum relay and reconnect them to the new relay, pin for pin.

R11 FORMATTER POWER SUPPLY REPLACEMENT

To replace the Formatter Power Supply (Figure 6R-12), perform the following:

1. Note the DDLT section that prompted this action.
2. Turn Off the Formatter Power Supply.
3. Disconnect the power cable from the AC source first, and then disconnect the cable from the power supply.
4. Remove the four front panel attachment screws and remove the front panel.
5. Remove all logic cables from the Formatter backplane. (figure 6R-5)
6. Remove the six formatter mounting screws. (The formatter may be allowed to rest on the blower assembly.
7. Remove the formatter from the equipment cabinet.
8. Disconnect the power supply connectors from the following terminals on the formatter back plane:

E5 (Chassis Ground)	black
E5 (Logic Ground)	black
E4 (+10V)	yellow
E3 (+ 5V)	red

9. Remove the nut and washer securing the chassis grounding cable to the power supply rear enclosure (see fig. 6R-13).
10. Remove the four phillips head Power Supply retaining bolts on left side of the formatter enclosure.
11. Pull the power supply forward out of the formatter enclosure. Check the fuse in the new power supply. Install a new power supply by repeating steps 8 through 11 in reverse order.
12. Reinstall the formatter into the equipment cabinet by repeating steps 2 through 7 in reverse order.

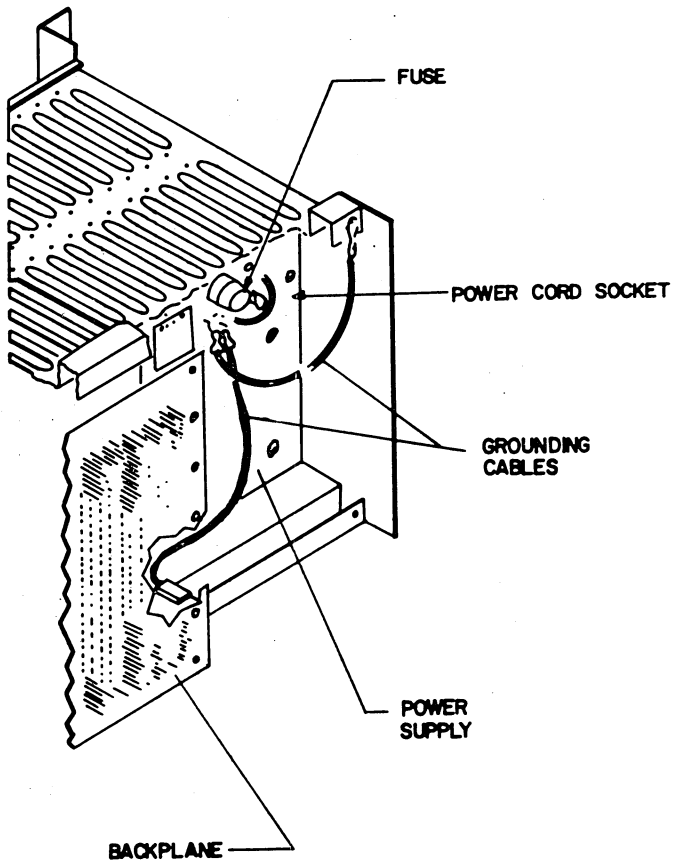

Figure 6R-13. Formatter Power Supply Grounding

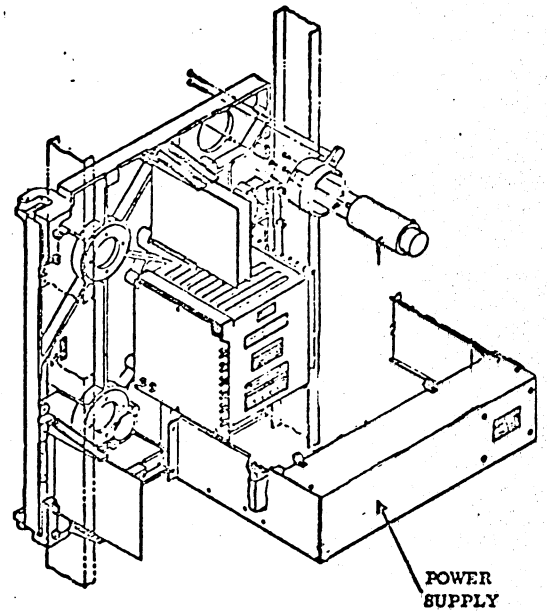

Figure 6R-14. Transport Power Supply

R12 TRANSPORT POWER SUPPLY REPLACEMENT

To replace the power supply (figure 6R-14), perform the following:

1. Note the DDLT section that prompted this action (sheet and action number).
2. Unload the tape by touching the CLEAR and then UNLOAD touch control pads. When the tape has rewound from the take up reel, the transport may be powered down by pressing the main power switch off.
3. Unlock and swing out the tape deck by turning the cabinet latch screws counter clockwise (figure 6R-3).
4. Disconnect the power cable to the power supply and ground connection from the power supply.
5. Disconnect the wiring harness running from the tape unit to the power supply (three connectors).
6. Remove the four screws holding the power supply to the vertical mounting rails in the front of the cabinet.

CAUTION

The power supply is heavy; make sure there is proper support while removing and replacing it.

7. Check the fuse in the new power supply.
8. Remove the metal brackets at each end of the power supply by removing the four screws at the top and bottom of the power supply.

   One of the metal brackets has the power relay assembly mounted on it. The wires running from the power relay to the power supply must be labeled and disconnected at the power supply.
9. The power supply wiring harness must be labelled and removed from the power supply.
10. Install a new power supply by repeating the above steps in reverse order.

R13 BLOWER ASSEMBLY REMOVAL

To remove the blower assembly (figure 6R-15), perform the following:

1. Note the DDLT section that prompted this action (sheet and action number).
2. Unload the tape by touching the CLEAR and then UNLOAD touch control pads. When the tape has rewound from the take up reel, the transport may be powered down by pressing the main power switch off.
3. Unlock and swing out the tape deck by turning the cabinet latch screws counter clockwise (figure 6r-3).
4. Remove the pneumatic voltage regulator shield by removing two 4-40 by 0.25 inch screws.
5. On the pneumatic regulator board, remove

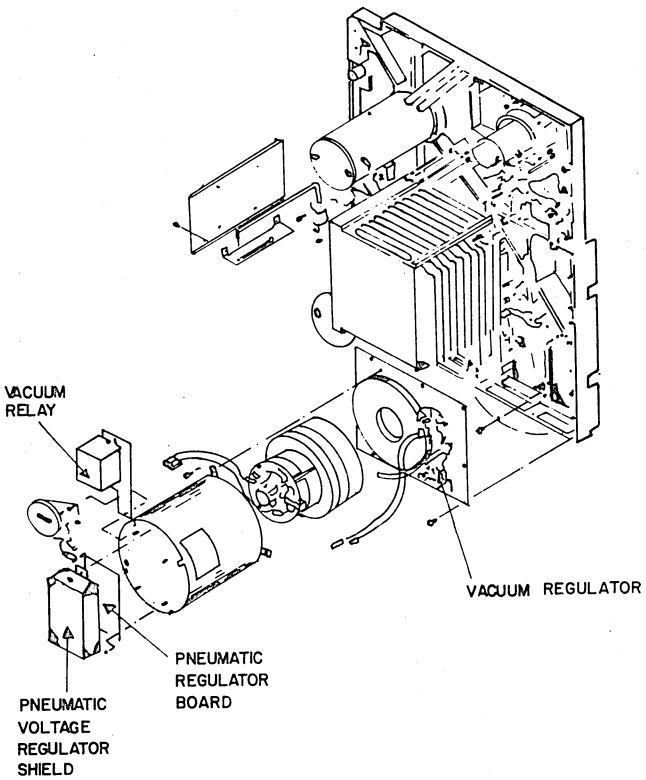

Figure 6R-15. Blower Assembly

the two black wires (from the blower assembly labeled E1 and E2).

6. Remove the third black wire (ground) coming out of the blower assembly at the base of the blower assembly.
7. Remove the pneumatic regulator board by removing the four screws on the board.
8. Remove the running time meter and vacuum relay mounted on the blower assembly by removing the screws.
9. Loosen the three screws at the mounting flange of blower housing.
10. Rotate the blower assembly clockwise until the flanges are clear of the screw heads and remove the assembly.
11. Replace the assembly with a new one, following the removal procedures in reverse order and leaving the pneumatic voltage regulator shield off until after adjustment.
12. Preform the blower assembly vacuum adjustment, Procedure R14.

R14 BLOWER ASSEMBLY VACUUM ADJUSTMENT

To adjust the blower assembly vacuum, perform the following:

1. Note the DDLT section that prompted this action (sheet and action number).
2. Unload the tape by touching the CLEAR and then UNLOAD touch control pads. When the tape has rewound from the take up reel, the transport may be powered down by pressing the main power switch off.
3. Unlock and swing out the tape deck by turning the babinet latch screws counter-clockwise. (Figure 6R-3).
4. Disconnect the file protect tube from its fitting at the rear of the deck assembly.
5. Attach the vacuum gauge to the deck fitting by using a connector-tube, tee fitting, and tubing, and attach the file protect tube to the tee (Figure 6R-16).

NOTE

Verify that the 60/60 Hz jumper is correctly installed on the pneumatic regulator board.

6. Install cap plugs in both the 0.375 and 0.250 inch bleed holes of the vacuum plenum. These caps are located near the regulator relay bracket.
7. Turn on the power to the transport, and load the loop columns with tape.

CAUTION

High voltage is present throughout the pneumatic voltage regulator board.

8. Remove the pneumatic voltage regulator shield, and adjust the potentiometer on the pneumatic regulator board, using a small plastic screwdriver to obtain the minimum vacuum indicated by gauge.

9. While monitoring the vacuum gauge, lower the vacuum reading to less than 14.5 inches of water by performing the following:

   a. Remove the 0.250 inch plug. If the vacuum has less than 14.5 inches of water, perform step 8. If the reading is greater than 14.5 inches of water, replace the 0.250 inch plug and perform step 9b below.

   b. Remove the 0.375 inch plug. If the vacuum is less than 14.5 inches of water, perform step 10. If the reading is greater than 14.5 inches of water, remove the 0.250 inch plug and perform step 10.

10. Adjust the potentiometer on the pneumatic voltage regulator board, using a small plastic-handled screwdriver, to obtain a vacuum of 14.5 inches of water as indicated by the gauge.

NOTE

The object of this procedure is to provide a vacuum reading of 14.5 inches of water with the regulator operating in its lower one third adjustment range and running the blower at the minimum speed possible.

11. Remove all power from the transport.

12. Remove the gauge and associated tubing.

13. Reconnect the file protect tube to the deck fitting.

14. Install the pneumatic voltage regulator shield.

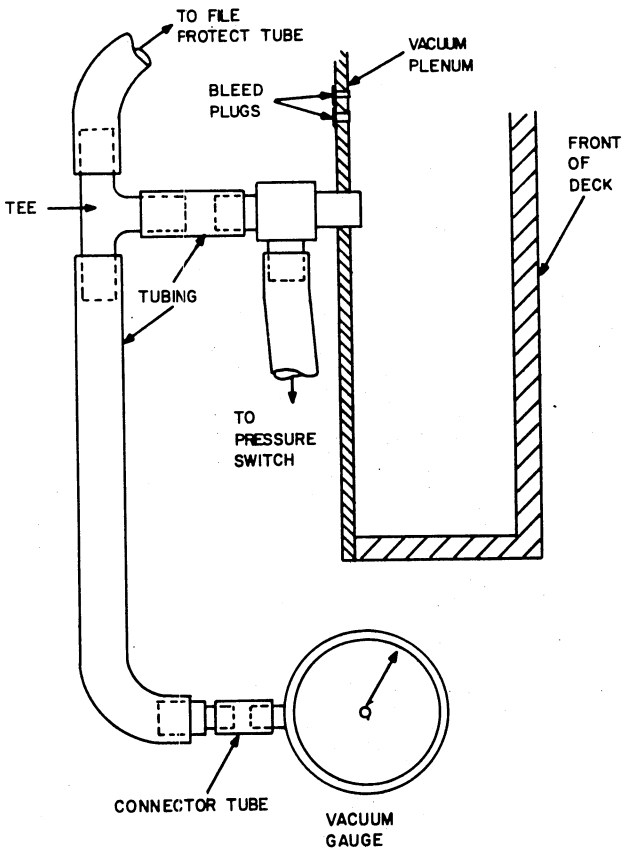

Figure 6R-16. Vacuum Gauge Installation

R15 UPPER TAPE TACHOMETER (MACHINE REEL) REMOVAL/REPLACEMENT

To remove/replace the upper tape tachometer (machine reel), perform the following:

1. Note the DDLT section that prompted this action (sheet and action number).
2. Unload the tape by touching the CLEAR and then UNLOAD touch control pads. When the tape has rewound from the take up reel, the transport may be powered down by pressing the main power switch off.
3. Unlock and swing out the tape deck by turning the cabinet latch screws counter-clockwise. (figure 6R-3)
4. Open the front transport door.
5. Remove the head cover (figure 6R-2).
6. Swing the tape unit out, exposing the back of the transport. Remove four 6-32 by 0.63 inch Phillips screws and flat washers holding the filler plate.
7. Loosen the front door ground strap at the door support bracket end, to allow the filler plate to clear.
8. Disconnect the W7P4 connector from sensor board assembly (figure 6R-17) at the back of the tape unit. Note the color of the lead to pin 1 for replacement purposes.
9. Carefully remove the board assembly and mounting bracket (figure 6R-17) by removing the hex head screw on the mounting bracket.

NOTE

Step 10 is not necessary unless the tachometer disk is damaged; the sensor can be removed without removing the disk assembly.

10. Remove the 10-32 het nut (figure 6R-17), lock washer, and flat washer.

11. Install the new reel tape tachometer in the reverse order of this procedure.

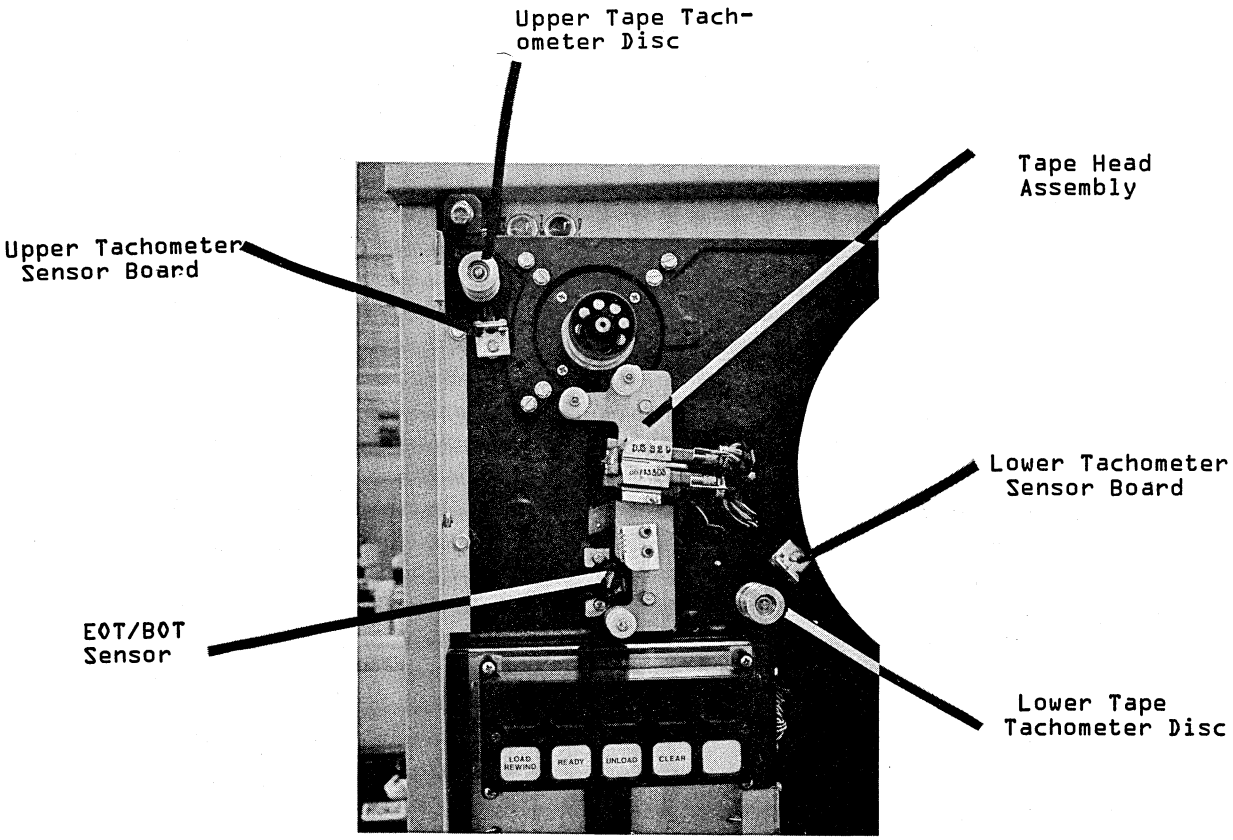

Figure 6R-17. Upper and Lower Tape Tachometer, Tape Head and EOT/BOT Sensor Detail

R16 MACHINE REEL TAPE TACHOMETER ALIGNMENT

To align the machine reel tape tachometer (figure 6R-19), perform the following:

1. Note the DDLT section that prompted this action (sheet and action number).
2. Unload the tape by touching the CLEAR and then UNLOAD touch control pads. When the tape has rewound from the take up reel, the transport may be powered down by pressing the main power switch off.
3. Unlock and swing out the tape deck by turning the cabinet latch screws counter-clockwise. (figure 6R-3).
4. Align the sensor on the board assembly so that the tachometer passes through the middle of the sensor without rubbing any part of the sensor. The sensor should be at a 90 degree angle to the shaft holding the tachometer.

R17 LOWER TAPE TACHOMETER (FILE REEL) REMOVAL/REPLACEMENT

To remove/replace the lower tape tachometer (file reel), perform the following:

1. Note the DDLT section that prompted this action (sheet and action number).
2. Unload the tape by touching the CLEAR and then UNLOAD touch control pads. When the tape has rewound from the take up reel, the transport may be powered down by pressing the main power switch off.
3. Unlock and swing out the tape deck by turning the cabinet latch screws counter-clockwise. (figure 6R-3)
4. Open the transport front door.
5. Remove the head cover by removing two 6-32 by 0.31 inch screws.
6. Swing the tape unit out exposing the back of the transport.
7. Remove the filler plate.

   There are two Phillips screws holding the filler plate around the file reel tape tachometer; one of these is located directly above the card cage on the back of the transport, and the other screw is located below and to the right of the first one. To remove it all the cards in the card cage must be removed.

   Mark the cards to ensure they are returned to the proper slot. A screwdriver can then be inserted in the hole on the inside of the cage (approximately 1 inch from the inside front of slot 10) to remove the last screw.

8. Disconnect the U8P2 connector from the sensor board assembly (figure 6R-17), at the back of the tape unit. Note the color of the lead to pin 1 for replacement purposes.

9. Carefully remove the sensor board assembly and mounting bracket by removing the hex head screw on the mounting bracket (figure 6R-17).

NOTE

Step 10 is not necessary unless the tachometer disk is damaged. The sensor board assembly can be removed without removing the disk assembly.

10. To replace the tachometer disk, remove the hex nut, lock washer, and flat washer located adjacent to sensor board hole on the back of the tape unit.

11. Install the new file reel tape tachometer in the reverse order of this procedure.

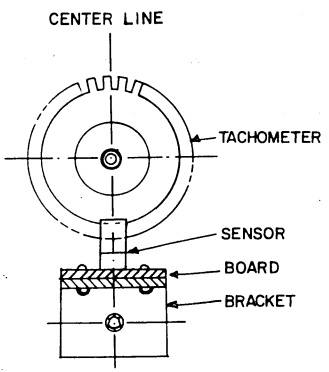

Figure 6R-19. File Reel Tape Sensor Alignment

R18 FILE REEL TAPE TACHOMETER ALIGNMENT

To align the file reel tape tachometer (figure 6R-20), perform the following: Align the sensor on the board assembly so that the tachometer passes through the middle of the sensor without rubbing any part of the sensor. The sensor should be at a 90 degree angle to the shaft holding the tachometer.

R19 EOT/BOT SENSOR ASSEMBLY REMOVAL/REPLACEMENT

To remove/replace the end-of-tape/ beginning-of-tape sensor assembly (figure 6R-17), perform the following:

1. Note the DDLT section that prompted this action (sheet and action number).
2. Unload the tape by touching the CLEAR and then UNLOAD touch control pads. When the tape has rewound from the take up reel, the transport may be powered down by pressing the main power switch off.
3. Unlock and swing out the tape deck by turning the cabinet latch screws counter-clockwise. (Figure 6R-3)
4. Locate and disconnect the W8P2 connector. Note the color of the twisted pair wires to pins 1 and 2 for replacement purposes.

5. Remove the upper fiber optic lamp source on the back of the transport.

6. Trace the two fiber optic bundles coming from the end-of-tape/beginning-of-tape sensor assembly to the upper light source, and carefully remove them by inserting a small screwdriver in the slot along the side of the fiber optic to the spread socket. Note the position of each bundle as it is removed for replacement purposes.

7. Remove two 6-32 by 0.5 inch Phillips head screws holding the end-of-tape/beginning-of-tape assembly to the deck.

8. Carefully pull the end-of-tape/beginning-of-tape sensor assembly out from the deck.

9. Install the new end-of-tape/beginning-of tape sensor assembly in the reverse order of this procedure.

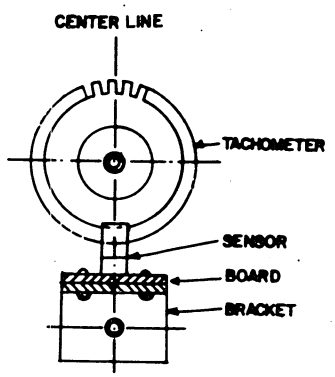

Figure 6R-20. File Reel Tape Sensor Alignment

R20 EOT/BOT ASSEMBLY ALIGNMENT

To align the end of tape/beginning of tape (figure 6R-17), perform the following:

1. Note the DDLT section that prompted this action (sheet and action number).

2. Unload the tape by touching the CLEAR and then UNLOAD touch control pads. When the tape has rewound from the take up reel, the transport may be powered down by pressing the main power switch off.

3. Unlock and swing out the tape deck by turning the cabinet latch screws counter clockwise. (figure 6R-3).

4. Locate and disconnect the W9P2 connector. Note the color of the twisted pair wires to pins 1 and 2 for replacement purposes.

5. Remove the upper fiber optic lamp source on the back of the transport.

6. Trace the two fiber optic bundles coming from the end-of-tape/beginning-of-tape sensor assembly to the upper light source, and carefully remove them by inserting a small screwdriver in the slot along the side of the fiber optic to the spread socket. Note the position of each bundle as it is removed for replacement purposes.

7. Remove two 6-32 by 0.5 inch Phillips

head screws holding the end-of-tape/ beginning-of-tape sensor assembly out from the deck.

9. Install the new end-of-tape/beginning-of-tape sensor assembly in the reverse order of this procedure.

R21 FIBER OPTIC LIGHT BULB REMOVAL

To remove the fiber optic light bulb (figure 6R-21), perform the following:

1. Note the DDLT section that prompted this action (sheet and action number).
2. Unload the tape by touching the CLEAR and then UNLOAD touch control pads. When the tape has rewound from the take up reel, the transport may be powered down by pressing the main power switch off.
3. Unlock and swing out the tape deck by turning the cabinet latch screws co counter-clockwise. (figure 6R-3).
4. Locate the fiber optic light source.
5. Hold the light source firmly, and remove the lamp socket by turning counter clockwise approximately 45 degrees.
6. Pull the bulb (type 192) straight out from the socket, and replace it with a new one.

NOTE

Due to the location of the filament in the bulb, it may be necessary to turn the bulb around 180 degrees in the socket to achieve the brightest amount of light through the fiber optic bundles.

R22 OPERATORS PANEL LIGHT BULB REMOVAL/REPLACEMENT

To remove the operators panel light bulb (figure 6P-22), perform the following:

1. Note the DDLT section that prompted this action (sheet and action number).
2. Unload the tape by touching the CLEAP and then UNLOAD touch control pads. When the tape has rewound from the take up reel, the transport may be powered down by pressing the main power switch off.
3. Unlock and swing out the tape deck by turning the cabinet latch screws counter-clockwise. (figure 6R-3).
4. Remove the two screws holding the bezel to the housing.
5. Lift the bezel from the housing, and allow it to hang on the wires. It is not necessary to disconnect the wires.
6. Remove the diffuser by pulling it straight out of the housing.

7. Reach into the assembly with fingers and extract the snap-in bulb (type 336) from the holder.

To replace the operators panel light bulb, perform items 4, 5, 6, and 7 above in reverse order.

R23 FILE PROTECT SENSOR ASSEMBLY REMOVAL/REPLACEMENT

1. Note the DDLT section that prompted this action (sheet and action number).
2. Unload the tape by touching the CLEAR and then UNLOAD touch control pads. When the tape has rewound from the take up reel, the transport may be powered down by pressing the main power switch off.
3. Unlock and swing out the tape deck by turning the cabinet latch screws counter-clockwise. (figure 6R-3).
4. To remove the file protect sensor assembly (figure 6R-23), perform the following:
   a. Remove the file reel hub assembly according to procedure R24.
   b. Remove the plastic tubing from the rear of the sensor assembly.
   c. Remove the two 10-32 by 0.5 inch screws holding the sensor assembly to the deck.
   d. Partially remove the sensor assembly from the deck. Disconnect the two wires from the switch. Note the wire color and connection for reassembly purposes.
5. To replace the file protect sensor assembly perform the following:
   a. Prior to installing the sensor assembly, ensure that the shoulder of the activator rod causes the switch to actuate.
   b. Perform steps a through d above in reverse order.
   c. Mount the file reel hub. Ensure that the tape will track without rubbing the reel sides.
   d. Install a tape reel without the write enable ring, and ensure that the activator rod does not touch the reel when the reel is rotated through 360 degrees.
   e. Install tape reel with a write enable ring installed on the file reel hub.
   f. Perform a load operation, and ensure that the vacuum pulls the activator rod sufficiently to prevent the rod from touching the ring.
   g. Unload the transport.

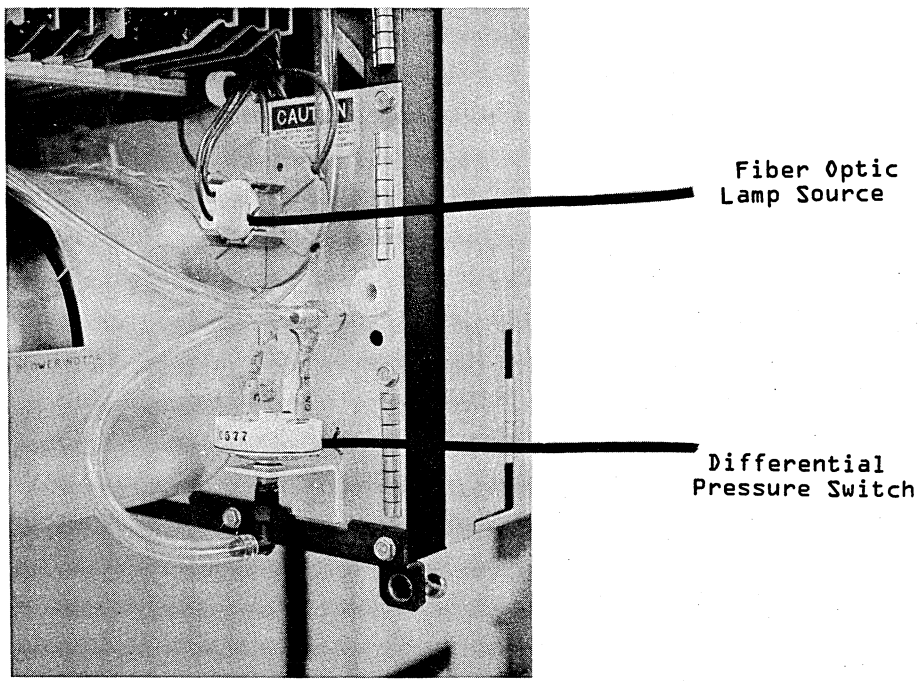

Figure 6R-21. Fiber Optic Light Source and Pressure Switch

Figure 6R-22. Transport Operators Panel Indicators

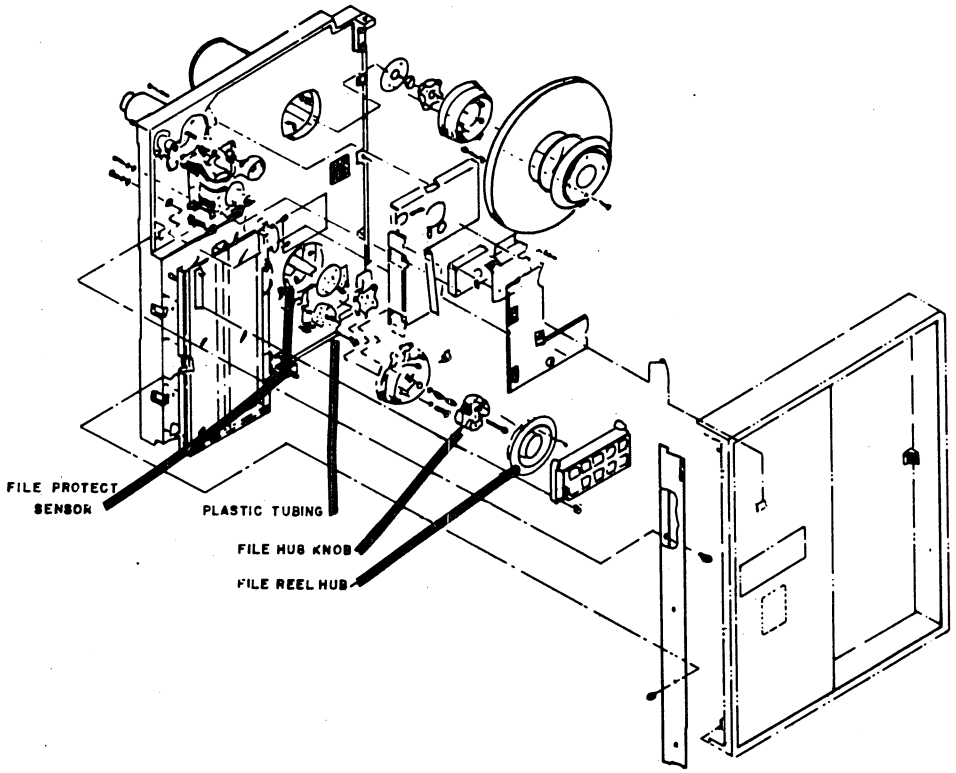

Figure 6R-23. File Protect Sensor Assembly and File Hub

R24 FILE HUB REMOVAL/REPLACEMENT

To remove/replace the file/hub {figure 6R-23}, perform the following:

1. Note the DDLT section that prompted this action {sheet and action number}.
2. Unload the tape by touching the CLEAR and then UNLOAD touch control pads. When the tape has rewound from the take up reel, the transport may be powered down by pressing the main power switch off.
3. Unlock and swing out the tape deck by turning the cabinet latch screws counter-clockwise. {figure 6R-3}.
4. Swing the front door of the transport open.
5. Remove the four Phillips head screws from the front of the hub assembly, and carefully remove the front of the hub.
6. Remove the two white tabs from the inside of the hub, carefully noting the direction that they are inserted.
7. Carefully push in on the file hub knob, and remove the four brown tabs that hold the file hub knob in position. Note the position of each tab as it fits in the assembly.
8. Remove the two flat head screws from the front of the file hub knob, being careful not to drop the spring, sleeve, or washer. Remove the file hub knob.
9. Remove the reel hub by removing two flat head screws and washers.
10. To replace the file/hub, perform the removal procedure in reverse order.
11. Perform the file hub alignment procedure as described in the Magnetic Tape Transport Manual.

R25 CONTROLLER PRINTED CIRCUIT BOARD REPLACEMENT

To replace the magnetic tape transport controller printed circuit board perform the following:

1. Note the DDLT section that prompted this action {sheet and action number}.
2. Unload the tape by touching the CLEAR and then UNLOAD touch control pads. When the tape has rewound from the take up reel, the transport may be powered down by pressing the main power switch off.
3. Unlock and swing out the tape deck by turning the cabinet latch screws counter-clockwise. {figure 6R-3}.
4. Using the board puller, carefully pull out the original controller

board. Identify it with a defective parts tag showing the controller and central processing unit serial numbers, the cause of removal (diagnostic action code), and running time meter information of the magnetic tape transport with the highest running time.

5. Visually verify that the spare board is identical to the one that was removed and has the correct part number.

6. The position of selectable jumpers maybe checked by refering to section 4R, volumne 1 of this manual.

7. Insert the spare controller board into the same slot (component side to the left). Make sure the outside board edge is flush with the other boards.

8. Replace the logic chassis cover.

9. Replace the processor cabinet cover.

10. Load the magnetic tape transport tapes as required.

11. Return to the DDLT that prompted this action.

R26 OPERATORS PANEL REMOVAL/REPLACEMENT

To remove the operators panel, perform the following:

1. Note the DDLT section that prompted this action (sheet and action number).

2. Unload the tape by touching the CLEAR and then UNLOAD touch control pads. When the tape has rewound from the take up reel, the transport may be powered down by pressing the main power switch off.

3. Unlock and swing out the tape deck by turning the cabinet latch screws counter-clockwise. (figure 6R-3).

4. a. Remove the four screws holding the panel base to the transport.
   b. Disconnect the cable harness connector from the panel.

To install a new operators panel, perform the following:

5. a. Refer to procedure R23 to ensure that the lamps have been installed in the new operators panel. If the lamps have not been installed, use new lamps or the lamps from the previously dismounted panel.
   b. Install the new operators panel by repeating step 4 in reverse order.

R27 POWER DISTRIBUTION BOX COMPONENTS CHECK

Checking components of the power distribution box requires the use of a vom and the following procedure: (Figure 6R-24):

1. Open the rear door to the magnetic tape cabinet.
2. Take out the six mounting screws and remove the power distribution box cover.
3. With the vom set to read 300 vac and power on, check the input voltage on terminals 1 and 2 of TB01. The voltage should be 120 vac ±10%.
4. With the vom set to read 300 vac and power on, check the voltage on the output terminals of the line filter. The voltage is approximately 0.8% less than step 3 when fully loaded.
5. With ac power off, measure the voltage across T1 and T2 of the triac.
   a. If the meter reads 120v, the triac and ac power up control No. 2 printed circuit board is OK.
   b. If the meter reads 0v, the triac is shorted and must be replaced.
   c. If the meter reads, the ac power up control No. 2 printed circuit board is bad and must be replaced.
6. With ac power on, measure the voltage across T1 and T2 of the triac.
   a. If the meter reads 120v, the triac is faulty and must be replaced.
   b. If the meter reads 0v, the triac and ac power up control No. 2 printed circuit board are OK.
   c. If the meter reads 70 to 100v, the ac power up control No. 2 printed circuit board is bad and must be replaced.
7. Remove the meter leads and replace the cover on the power distribution box.
8. Close the cabinet door and continue the testing sequence.

R28 TRIAC POWER SWITCH REPLACEMENT

To replace the triac (figure 6R-24), proceed as follows:

1. Turn off all power to the magnetic tape cabinet, and disconnect the power cord from the primary power source.
2. Open the rear door of the magnetic tape cabinet.
3. Take out six mounting screws and remove power distribution box cover.
4. Refer to figure 6R-24, and locate the triac.
5. Identify and remove the three wires

This page intentionally left blank.

from the printed circuit board.

6. Using an open-end wrench, carefully turn the triac counter-clockwise to remove it from the heat sink.
7. Install the new triac in the heat sink and reconnect the triac wires to the power sequencer printed circuit board.
8. Reinstall the power distribution box cover, close the cabinet door and reconnect power cord to the primary power source.
9. Continue the DDLT testing sequence.

R29 AC LINE FILTER REPLACEMENT

To replace an ac line filter (figure 6R-24), proceed as follows:

1. Turn off all power to the magnetic tape cabinet, and disconnect the power cord from the primary power source.
2. Open the rear door to the magnetic tape cabinet.
3. Take out the six mounting screws and remove the power distribution box cover.
4. Refer to figure 6R-24 and locate the line filter.
5. Identify and remove the wires from the line filter.
6. Take out the four mounting screws and remove the line filter from the power distribution box.
7. Install the new line filter with the same orientation as before, and reconnect wires.
8. Reinstall the power distribution box cover, close the cabinet door, and reconnect the power cord to the primary power source.
9. Continue the DDLT testing sequence.

R30 AC POWER UP CONTROL NO. 2 REPLACEMENT

To replace an circuit board replacement (figure 6R-24), proceed as follows:

1. Turn off all power to the magnetic tape cabinet, and disconnect the power cord from the primary power source.
2. Open the rear door of the magnetic tape cabinet.
3. Take out the six mounting screws and remove power distribution box cover.
4. Refer to figure 6R-24 and locate the printed circuit board.
5. Identify and remove the wires from the printed circuit board.
6. Take out the four mounting screws and

remove the printed circuit board from the power distribution box.

7. Install the new printed circuit board with the same orientation as before, and reconnect the wires.
8. Reinstall the power distribution bix cover, close the cabinet door and reconnect the power cord to the primary power source.
9. Continue the DDLT testing sequence.

R31 POWER DISTRIBUTION BOX CIRCUIT BREAKER CHECK/REPLACEMENT

To check and/or replace the circuit breaker in the power distribution box (figures 6R-24), proceed as follows:

1. Turn off all power to the magnetic tape cabinet and disconnect the power cord from the primary source.
2. Open the rear door on the magnetic tape cabinet.
3. Take out the six mounting screws and remove the power distribution box cover.
4. Refer to figure 6R-24 and locate the circuit breaker.
5. Identify and remove the wires from the circuit breaker.
6. With an ohmmeter, check for continuity across the circuit breaker terminals. If no continuity is present, press the circuit breaker reset handle and check again. If there is still no continuity, replace the circuit breaker.
7. Remove the circuit breaker by removing the two mounting screws on the outside of the power distribution box and pulling it out from inside of the power distribution box.
8. Install the new circuit breaker with the same orientation as before and replace the mounting screws.
9. Reinstall the power distribution box cover, and close the cabinet door.
10. Reconnect the power cord to the primary source and continue the DDLT testing sequence.

R32 POWER DISTRIBUTION BOX SWITCH CHECK/REPLACEMENT

To check and/or replace a switch in the power distribution box (figure 6R-29) requires the use of an ohmmeter and the following procedure:

1. Turn off all power to the magnetic tape cabinet, and disconnect the power cord from the primary source.

2. Open the rear door of the magnetic tape cabinet.
3. Take out six mounting screws and remove the power distribution box cover.
4. Refer to figure 6R-24 and locate the switch.
5. Identify and remove the wires from the switch.
6. With an ohmmeter, check for continuity across the switch terminals with the switch on and then off. If no change is noted on the ohmmeter, replace the switch:
   a. Remove the switch by releasing the mounting nut on the collar of the switch and pulling the switch out from the inside of the power distribution box.
   b. Install the new switch with the same orientation as before; then replace the mounting nut and reconnect the wires.
7. Reinstall the power distribution box cover, close the cabinet door, and reconnect the power cord to primary source.
8. Continue the DDLT testing sequence.

R33 RESISTOR ASSEMBLY, 2K, 50W REPLACEMENT

1. Turn off all power to the magnetic tape cabinet and disconnect the power cord from the primary power source.
2. Open the read door of the magnetic tape cabinet.
3. Remove the six power distribution box cover holddown screws.
4. Refer to figure 6R-24 and locate the resistor assembly
5. Identify and remove the two wires from the printed circuit board.
6. Remove the two resistor mounting screws.
7. Install a new resistor assembly maintaining the same orientation and reconnect wires.
8. Reinstall the power distribution box cover, close cabinet door, and reconnect power cord to the primary power source.
9. Continue testing sequence.

R34 LOOP COLUMN SENSOR REMOVAL/REPLACEMENT

1. Note the DDLT section that prompted this action (sheet and action number).
2. Unload the tape by touching the CLEAR and then UNLOAD touch control pads. When the tape has rewound from the take up reel, the transport may be powered down by pressing the main power switch off.
3. Unlock and swing out the tape deck by turning the cabinet latch screws counter-clockwise. (figure 6R-3).
4. To remove either sensor from left loop column, proceed as follows:
5. Loosen the door ground strap at the front door support bracket end.
6. Remove the filler plate by removing four 6-32 Phillips screws.
7. Detach front door support by removing two 10-32 x 3/8 and one 6-32 x 3/8 hex head screws that secure support to tape deck.
8. Remove single 4-40 x 5/16 Phillips thread-forming screw that secures board to loop column rail.

CAUTION

Harness connections to loop sensors have minimal service length. Caution must be used when removing sensor to not inadvertently disconnect loop sensor connectors. The connectors may retract inside loop deck and this will necessitate removal of entire blower assembly.

9. Sensor board is now held in place by a right angle edge connector. To remove, pull board straight out toward left side of transport.
10. Replace either left loop column sensor in reverse order as described above.
11. To remove either sensor from right loop column, proceed as follows:
12. Detach appropriate hinge place by removing two 6-32 x 1/4 hex head screws that secure hinge to tape deck.
13. Remove foam padding.
14. Remove single 4-40 x 5/16 Phillips thread-forming screw that secures board to loop column rail.

CAUTION

Harness connections to loop sensors have minimal service length. Caution must be used when removing sensor to not disconnect loop sensor connectors. The connectors may retract inside loop deck and this will necessitate removal of entire blower assembly.

15. Sensor board is now held in place by a right angle edge connector. To remove, pull board straight out

toward right side of transport.

16. Replace either right loop column sensor in reverse order as described above.

R35 INTERLOCK SWITCH CHECK AND REPLACEMENT

Check the interlock switch in the following manner:

1. Note the DDLT section that prompted this action {sheet and action number}.
2. Unload the tape by touching the CLEAR and then UNLOAD touch control pads. When the tape has rewound from the take up reel, the transport may be powered down by pressing the main power switch off.
3. Unlock and swing out the tape deck by turning the cabinet latch screws counter-clockwise. {figure 6R-3}
4. Open the front door to the tape transport.
5. Remove two hex head screws securing the interlock switch mounting plate to the tape deck.
6. Slide the interlock switch free from the tape deck.
7. Using a vom set to the ohms x 1 scale, measure for an open condition at the terminals marked "c" {common} and "no" {normally open}.
8. Pull the interlock switch button out and using a vom set to OHMS x 1 scale measure for continuity at the terminals marked "c" and "no".
9. Push in and hold the interlock switch button, repeat continuity check at terminals marked "c" and "no".
10. If any of the above checks fail, replace the switch by removing and identifying the two wires connected to the switch.
11. Install a new switch by preforming the above steps in reverse order.

R36 READ/WRITE/ERASE HEAD REPLACEMENT

1. Note the DDLT section that prompted this action {sheet and action number}.
2. Unload the tape by touching the CLEAR and then UNLOAD touch control pads. When the tape has rewound from the take up reel, the transport may be powered down by pressing the main power switch off.
3. Unlock and swing out the tape deck by turning the cabinet latch screws counter-clockwise. {figure 6R-3}

CAUTION

Do not remove any components attached to the head plate except tape guides. All other components are replaceable at the factory level only.

4. Remove head cover, remove the filler plate from tape deck by removing four 6-32 x 0.63 inch phillips screws and flat washers a the rear of the tape deck.

CAUTION

Do not touch the outside diameter (tape contact surface) of the capstan with fingers or tools.

5. Disconnect the two electrical connectors from the read and write heads.

6. Remove the two wires attached to erase head. Note wire color and connection for replacement purpose When reconnecting the wires to the erase head, ensure that the black is nearest the operator, while fac the unit.

7. Remove two 10-32 x 0.5 inch hex scre holding head plate to deck. Remove assembly.

8. Install a new head assembly by performing steps 1-6 in reverse order.

9. Perform the Read/Write head alignment procedure as described in the Magnetic Tape Transport Manual P/N

R37 POWER ON/OFF SWITCH REPLACEMENT

1. Note the DDLT section that prompted this action (sheet and action number).

2. Unload the tape by touching the CLEAR and then UNLOAD touch control pads. When the tape has rewound from the take up reel, the transport may be powered down by pressing the main power switch off.

3. Unlock and swing out the tape deck by turning the cabinet latch screws counter-clockwise. (figure 6R-3)

4. Remove primary power from the equipment cabinet by opening the rear cabinet door, turn all power switches and circuit breakers to the off position.

5. At the rear of the tape transport deck, remove and identify the four wires connected to the power switch.

6. Press inward, the power switch catches and slide the switch out the front of the tape deck.

7. Install a new switch by performing the above steps in reverse order.

R39 FIBER OPTICS REPLACEMENT

1. Note the DDLT section that prompted this action (sheet and action number).

2. Unload the tape by touching the CLEAR and then UNLOAD touch control pads. When the tape has rewound from the take up reel, the transport may be powered down by pressing the main power switch off.

3. Unlock and swing out the tape deck by turning the cabinet latch screws counter-clockwise. (figure 6R-3)

4. Fiber Optics Removal (Lower Loop Column)

   a. Perform Blower Assembly Vacuum Adjustment (procedure). If reading is 14.5 (±0.5 inch H_2O, no adjustment is necessary. Note reading.

   b. Remove pneumatics voltage regulator shield by removing two 4-40 x 0.25 inch screws.

   c. Disconnect wires at E3 through E6 on pneumatics voltage regulator board.

   d. Remove tubing at tee fitting leading to file protect sensor assembly.

   e. Remove tubing from bottom of differential pressure switch leading to loop column manifold. Note routing.

   f. Remove lower light source from tape deck by pulling from bracket.

      CAUTION

      When handling fiber optics do not bend sharply. The minimum bend radius os 0.4 inch (1.016 cm).

   g. Remove three fiber optics from light source by inserting small screw-driver in slot along side of fiber optics socket to spread socket. Note position from where each bundle is removed for replacement purposes.

   h. Remove pneumatics assembly from

tape deck by removing seven 10-32 x 0.5 inch screws. Note screws holding ground wire and clamp to tape deck for reassembly purposes.

i. Remove fiber optic mounting block by removing 6-32 x 0.25 inch screw.

j. Remove fiber optics from tape deck and vacuum seal.

5. Sensors Fiber Optics Replacement (Lower Loop Column)

a. Insert fiber optics through vacuum seal and into tape deck.

CAUTION

When handling fiber optics do not bend sharply. The minimum bend radius is 0.4 inch.

b. Install fiber optic mounting block over fiber optics and secure to tape deck using 6-32 x 0.25 inch screw. Ensure that flange on fiber optics end is in slot of mounting block.

c. Attach pneumatics assembly to tape deck using seven 10-32 x 0.5 inch screws. Ensure that ground wire and clamp are attached by screws noted in step 4h of the removal procedure.

CAUTION

Ensure that fiber optics routing is through slot in tape deck with cables from sensors and that when pneumatics mounting plate is in place, the vacuum seal is in place and compressed, and the fiber optics or cables are not pinched.

d. Route fiber optics through clamp then insert three fiber optics into light source. Observe Caution in step A. Ensure that bundles are installed in same position as noted in step 4G of the Removal procedure.

e. Mount light source on bracket.

f. Install tubing from loop column manifold to bottom of differential pressure switch. Route as noted in step 4E of Removal procedure.

g. Install tubing from file protect sensor assembly to tee fitting.

h. Connect wires to E3 through E6 on pneumatic regulator board.

i. Perform blower assembly vacuum adjustment (procedure). Prior to adjustment, compare reading with that recorded in step 4A of the Removal procedure. If reading differs by more than 0.5 inch of H_2O, inspect for leaks between

blower mounting plate and tape deck.

6. Fiber Optics Removal (Upper Left Loop Column)

   a. Remove bottom light source from tape deck by pulling from bracket.

   b. Locate and remove fiber optics from light source by inserting small screwdriver in slot along side of fiber optics socket to spread socket. Note position from where bundle is removed for replacement purposes.

   c. Remove fiber optic mounting block by removing 6-32 x 0.25 inch screw (Item 536).

   d. Remove fiber optice from tape deck.

7. Fiber Optics Replacement (Upper Left Loop Column)

   a. Insert fiber optics into tape deck.

      CAUTION

      When handling fiber optics do not bend sharply. The minimum radius is 0.4 inch.

   b. Install fiber optic mounting block over fiber optics and secure to deck using 6-32 x 0.25 inch screw. Ensure that flange on fiber optics end is in slot of mounting block.

   c. Observing Caution in step 1, route fiber optics through clamp then insert into light source in same location from which removed.

   d. Mount light source on bracket.

8. Fiber Optics Removal (Upper Right Loop Column)

   a. Disconnect cable from boards at front of card cage.

   b. Remove board XA1 through XA10 from card cage.

   c. Disconnect wires at E1 through E8 on back plane assembly.

   d. Disconnect cables from back plane assembly.

   e. Disconnect I/O cables from back plane assembly, if attached.

   f. Remove card cage and four spacers from tape deck by removing four 10-32 x 0.75 inch screws.

   g. Remove upper light source from tape deck by pulling from bracket.

   h. Locate and remove fiber optics from light sources by inserting small screw driver in slot along side of fiber optics socket to spread socket.

   i. Remove fiber optics mounting block by removing 6-32 x 0.25 inch screw.

j. Remove fiber optics from tape deck.

9. Fiber Optics Replacement (Upper Right Loop Column)

a. Insert fiber optics into tape deck.

CAUTION

When handling fiber optics do not bend sharply. The minimum radius is 0.4 inch.

b. Install fiber optic mounting block over fiber optics and secure to deck using 6-32 x 0.25 inch screw. Ensure that flange on fiber optics end is in slot of mounting block.

c. Observing Caution in step 1, insert fiber optics into light source in same location from which removed.

d. Mount light source on bracket.

e. Attach card cage to tape deck using four 10-32 x 0.75 inch screws and four spacers.

f. Connect cables that were disconnected in Removal procedure step 8D to back plane assembly. See Connection Diagram, figure 6A-5.

g. Connect I.O cables. See figure 6A-5.

h. Connect wires to E1 through E8 on back plane assembly.

i. Install boards in card cage at XA1 through XA10. Refer to figure 6R-9 for board types and locations.

j. Connect cable to boards at front of logic cage.

R40 FUSE REPLACEMENT (TRANSPORT)

The transport with power supply contain eight fuses. Five fuses are located on the power supply assembly. Three fuses are located (one per board) on each of the capstan, upper reel and lower reel power amplifier boards.

1. Note the DDLT section that prompted this action (sheet and action number).
2. Unload the tape by touching the CLEAR and then UNLOAD touch control pads. When the tape has rewound from the take up reel, the transport may be powered down by pressing the main power switch off.
3. Unlock and swing out the tape deck by turning the cabinet latch screws counter-clockwise. (figure 6R-3)
4. Open the rear door to the magnetic tape cabinet.
5. Turn off all switches on the power distribution box.
6. Remove the suspected fuse from its holder and check it for continuity.
7. If the fuse is bad, install a new fuse by preforming steps 1 through 6 in reverse order.

R41 FORMATTER INDICATOR REPLACEMENT

1. Open the rear door to the tape transport cabinet.
2. With a firm grasp pull the indicator straight out of its socket.
3. Install a new indicator by performing steps 1 through 2 in reverse order.

R42 FORMATTER FUSE REPLACEMENT

1. Note the DDLT section that prompted this action (sheet and action number).
2. Unload the tape by touching the CLEAR and then UNLOAD touch rewound from the take up reel, the transport may be powered down by pressing the main power switch off.
3. Unlock and swing out the tape deck by turning the cabinet latch screws counter-clockwise. (figure 6R-3)
4. Open the read door to the tape transport cabinet.
5. Power off the formatter by pressing the formatter power indicator.
6. Turn off all switches on the power distribution box.
7. Remove the formatter fuse through the front of the magnetic tape transport cabinet.
8. Install a new fuse by performing steps

1 through 7 in reverse order.

R45 TRANSPORT UNIT SELECT AND STOP JUMPER CHECKS

1. Note the DDLT section that prompted this action (sheet and action number).
2. Unload the tape by touching the CLEAR and then UNLOAD touch control pads. When the tape has rewound from the take up reel, the transport may be powered down by pressing the main power switch off.
3. Unlock and swing out the tape deck by turning the cabinet latch screws counter-clockwise. (figure 6R-3)
4. Refer to section 4R, Volumne 1 of this manual for the correct position for the tape transport jumpers.
5. Repeat steps 1 through 3 in reverse order and continue testing.

R46 CONTROLLER - FORMATTER CABLE REPLACEMENT

1. Note the DDLT section that prompted this action (sheet and action number).
2. Unload the tape by touching the CLEAR and then UNLOAD touch control pads. When the tape has rewound from the take up reel, the transport may be powered down by pressing the main power switch off.
3. Unlock and swing out the tape deck by turning the cabinet latch screws counter-clockwise. (figure 4R-3)
4. Open the rear door to the tape transport cabinet.
5. Power off the formatter, by depressing the power indicator.
6. Turn off all power distribution box switches and remove primary power from the tape transport cabinet.
7. Power off the CPU via the front panel power off switch.
8. Disconnect the three formatter back-panel connectors (figure 6R-5), J3 J4 and J5.
9. Remove the three screws securing the cable clamps to the formatter blower housing.
10. Remove the six screws securing the the power distribution box cover. Remove the cover.
11. Release the three "U" clamps securing the controller/formatter cable to the power distribution box.
12. Remove the controller/formatter cable from the tape cabinet.
13. Remove the rear skin from the processor cabinet.

14. Disconnect the three controller/formatter cable connectors from the backplane.
15. Remove the three "U" clamps securing the controller/formatter cable to the cable entry tray.
16. Remove the controller/formatter cable.
17. Install a new cable by performing steps 1-6 in reverse order.

R47 DIFFERENTIAL PRESSURE SWITCH REPLACEMENT

1. Note the DDLT section that prompted this action (sheet and action number).
2. Unload the tape by touching the CLEAR and then UNLOAD control pads. When the tape has rewound from the take up reel, the transport may be powered down by pressing the main power switch off.
3. Unlock and swing out the tape deck by turning the cabinet latch screws counter-clockwise. (figure 6R-3)
4. Locate the differential pressure switch (figure 6R-21)
5. Remove the lower, black plastic house coupling by pulling down with a slight twisting motion.
6. Remove and identify the two wires.
7. Remove the short piece of vacuum hose from the top of the pressure switch.
8. Remove the hex lock nut on the bottom of the pressure switch mounting bracket.
9. Remove the differential pressure switch.
10. Install a new differential pressure switch by performing the above steps in reverse order.

R43

To replace a formatter logic printed board, perform the following:

1. Note the DDLT that prompted the action (sheet and action number).

2. Place the formatter in the power down condition by pressing the main power switch.

3. Remove the formatter front panel by removing the four securing bolts.

4. Locate the printed circuit board assembly and remove the board by pulling the card outwards with an up, down motion.

5. Identify the card location and formatter serial number and log the information on the running time meter on a defective parts tag.

6. Visually verify that the spare printed circuit board is identical to the one removed and has the correct parts number.

7. Insert the spare logic board into the card slot, component side away from the power supply and push it into the card slot connector. Be sure the board is fully inserted (the board edges are flush together).

8. Power up the formatter.

9. Return to DDLT section that prompted this action.

NOTE

If write Control Board (A20) is replaced, note that replacement board has the parity generation jumper in the W2 position.

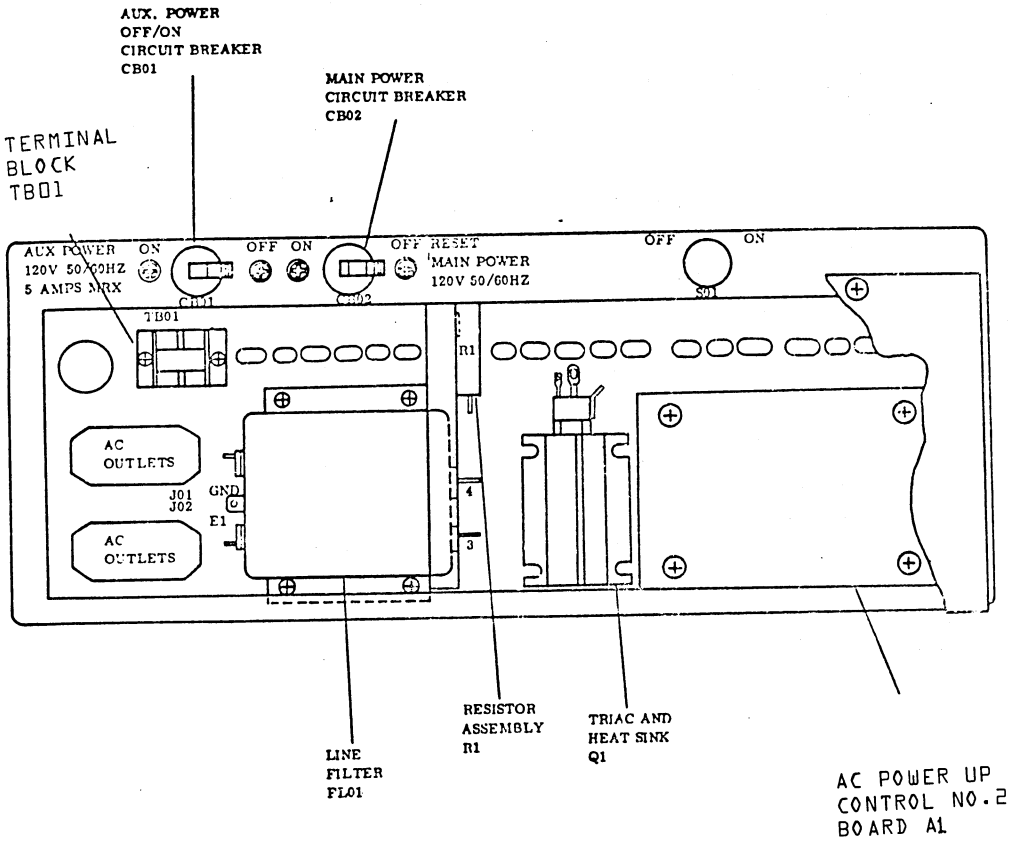

Figure 6R-24 Power Distribution Box Assembly

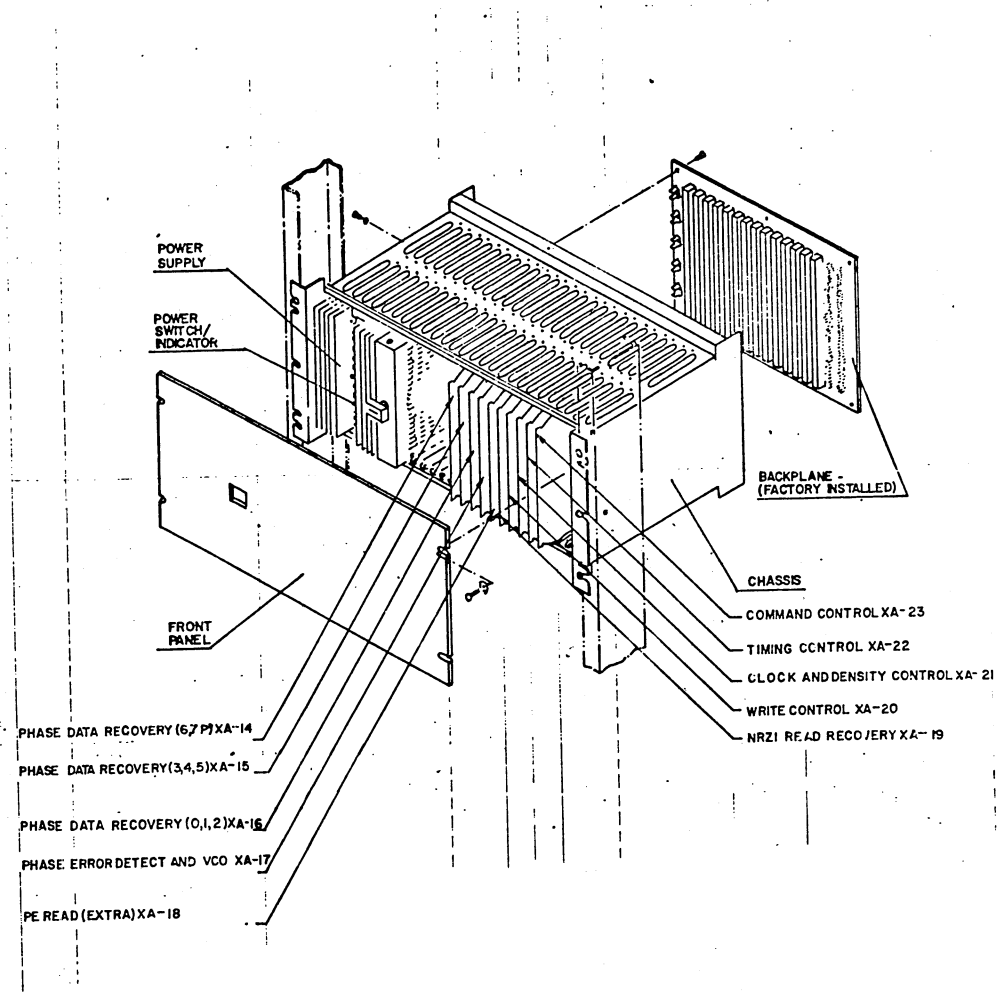

Figure 6R-25. Formatter Logic Board Locator

CARD READER/LINE PRINTER/COMMUNICATION LINE ADAPTER

CONTENTS

Procedure		Page
S1	Card Reader/Line Printer/Communication Line Adapter Installation/Replacement	6S-1

Figure		Page
6S-1	Card Reader/Line Printer/Communication Line Adapter Printed Circuit Board	6S-1

5I CARD READER/LINE PRINTER/COMMUNICATIONS LINE ADAPTER INSTALLATION/REPLACEMENT

To install or replace the CR/LP/CLA Controller (figure 6S-1), perform the following:

1. This printed circuit board may be installed while the system power is still on; however, it is generally a good practice to turn the processor power off (procedure A4) while inserting the board.
2. Open the right side panel of the processor cabinet.
3. Remove the processor cover plate by rotating the two captive fasteners counterclockwise.
4. Locate the printed circuit board position. (See table 4A-3 in volumn 1.)
5. Using the extractor tool attached to the cover place, remove the printed circuit board from the chassis.
6. Before installing the new printed circuit board, verify that the switches are set up to correspond to the normal operating positions shown in figures 4S-2, 4S-3, 4S-4 and table 4S-1.
7. Position the board in its assigned location with the component side facing left.
8. Seat the board into the back panel connector by applying firm thumb pressure at the upper and lower corners of the board.
9. Replace the panels, turn on the power (procedure A3), and execute the diagnostic tests specified in table 6-3.

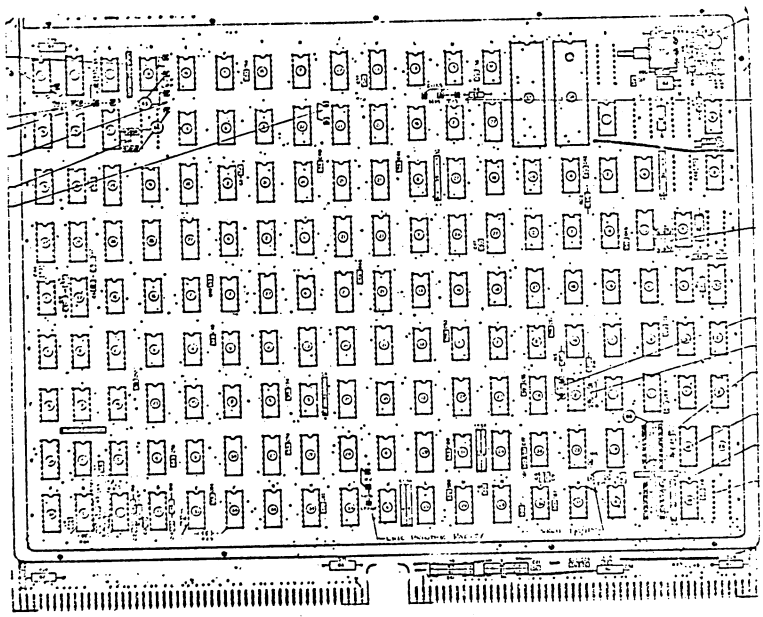

Figure 6S-1. Card Reader/Line Printer/ Communication Line Adapter Controller.

LINE PRINTER PROCEDURES

For line printer procedures refer to the Reference and Field Service Manual 9544060.

This section describes the maintenance aids required to service the CYBER 18-20/30 Timeshare System. In addition, general information is provided for support level maintenance activities.

This section is divided into subsections that deal with each equipment in the CYBER 18-20/30 Timeshare System. The codes used to identify each subsection are as follows:

Subsection	Equipment
7A	Processor
7B	Breakpoint panel
7C	Communications line adapter
7D	Card reader
7E	Console display (conversational display terminal)
7F	Line printer
7G	Magnetic tape transport
7H	Tape cassette transport
7J	Storage module drive control unit
7K	Flexible disk drive
7L	Keyboard display terminal
7M	Communications multiplexer

PROCESSOR

DIAGNOSTICS

On-site maintenance personnel require the following operational diagnostic system (ODS) diskettes or cassette tapes. Certain card decks may also be required. (Part numbers of the diagnostics are listed in table 7A-1).

- o LDCHK - Performs a quick-look test verification of instruction, memory, and checksum functions. In addition, a test is made of the processor-to-card-reader signal paths and instructions for continued diagnostic card deck or tape cassette loading. LODCHK is read in via autoload.

- o MPINS - Performs test verification on all basic and enhanced instruction repertoire.

- o MPMOS, MOSMA, PAGE1 - Performs data pattern testing of the memory circuits.

- o MPRTC - Performs test verification of the program protect system.

- o CRECO - Performs testing of the card reader/line printer controller in its test mode (off-line) configuration.

If maintenance support is required, the following additional test equipment is required for testing:

- o Oscilloscope - Dual trace, dc to 10 M Hz minimum, calibrated trigger sweep (Tektronics model 546).

Tables 7A-2 and 7A-3 provide function control register and display codes as reference for support level maintenance. For additional information, see the 1700 Enhanced Processor with Core Memory Hardware Reference Manual.

Refer to the ODS Reference Manual for further information.

TEST EQUIPMENT

The following test equipment is required in addition to a normal complement of hand tools:

- o Multimeter - 0 V dc through 50 V dc, accuracy 3 percent minimum, 20K ohm/V; 0 V ac through 250 V ac, accuracy 3 percent minimum

- o Card extender - Part number 96742400.

TABLE 7A-1. DIAGNOSTIC PART NUMBERS, ODS VERSION 2.0 (Continued)

CASSETTE TAPE

Cassette Top Assembly P/N 96820601 consists of both ODS Level I and ODS Level II Cassettes.

ODS Level I, Volume 1, 96854401

This cassette includes the following tests:

LDCHK3
MPINS
MPMOS
MOSMA
MPRTC
MIMEM
MIINS
PAGE1
DUCPU
MPMEM
CASEC
CRECO
LIAT1
LIAT2
SMDDA
SMDCU
SMDO1
SMDUT

ODS Level I, Volume 2, 96860300

This cassette includes the following tests:

LDCHK3
LCTT1
CDD1

ODS Level II, Volume 1, 96854426

This cassette includes the following tests:

LDCHK3
Monitor 1
CASET
CR104
CLA1A
CLA1M
CLA2A
LP408
LCTTA
LCTTB
CRUT1
CRUT2
CASEM
C104M
CLA2M
L408M
LCTTM

ODS MOSDMP, 96814321

MOSDMP

TABLE 7A-1 DIAGNOSTIC PART NUMBERS, ODS VERSION 2.0 (CONTINUED)

ODS Level II, Volume 2, 96854451

This cassette contains the following tests:

LDCHK3
Monitor 2
FDSKA
FDSKM
FDSKU

ODS Level II, Volume 3, 96860320

This cassette contains the following tests:

LDCHK3
Monitor 3
CLA8L
CLACD
CLAMP
CLALM
CLADM
CLAPM

ODS Level II, Volume 4, 96860340

This cassette contains the following tests:

LDCHK3
Monitor 4
CDD2
CDD2M
LCTT2
LCTTX (M test for LCTTB)

DISKETTE

Diskette top assembly P/N 96860100 consists of both ODS Level I and Level II diskettes.

ODS Level I, Volume 1, 96860000

This diskette includes the following tests:

LDCHK5
MPINS
MPMOS
MOSMA
MPRTC
MIMEM
MIINS
PAGE1
DUCPU
MPMEM
CASEC
CRECO
LIAT1
LIAT2
SMDDA
SMDCU
SMD01
SMDUT

ODS Level I, Volume 2, 96860020

This diskette contains the following tests:

LDCHK5
LCCT1
CDD1

ODS Level II, Volume 1, 96860040

ODS 2.0 diskette, Volume I consists of the following tests:

LDCHK5
Monitor 1
C104M
CLA1A
CLA1M
CLA2A
CLA2M
CR104
CRUT1
CRUT2
FDSKA
FDSKM
FDSKU
L408M
LCTTA
LCTTB
LCTTM
LP408

ODS Level II, Volume 2, 96860060

Volume 2 contains the following tests:

LDCHK5
Monitor 2
CASEM
CASET

ODS Level II, Volume 3, 96860080

Volume 3 contains the following tests:

LDCHK5
Monitor 3
CLA8L
CLACD
CLADM
CLALM
CLAMP
CLAPM

TABLE 7A-1 DIAGNOSTIC NUMBERS, ODS VERSION 2.0 (CONTINUED)

ODS Level II, Volume 4, 96860200

Volume 4 contains the following tests:

LDCHK5
Monitor 4
CDD2
CDD2M
LCTT 2
LCTT X

ODS MOSDMP, 96814320

ODS CARD DECK, 96820700

CR104	96814700
READ ADJUSTMENT	96808905
SYNC ADJUSTMENT	96809005
CRUT2	96814800

TABLE 7A-2. FUNCTION CONTROL RESISTER (FCR)

BIT		DIGIT	BIT DEFINITION
(LSB) 31	1F		Overflow
30	1E	7	Not Protected Instruction
29	1D		Protect Fault
28	1C		Parity Error
			Status Only
27	1B		Interrupt System Active
26	1A	6	Auto-Restart Enabled
25	19		Micro Running
24	18		Macro Running
23	17		Not used
22	16	5	Not used
21	15		Enable Auto Display
20	14		Enable Console Echo
19	13		Enable Micro Memory Write
18	12	4	Multilevel Indirect Addressing Mode
17	11		Not used
16	10		Suppress Console Transmit
			0 0 Breakpoint Off
15	0F		0 1 Instruction Reference Breakpoint
14	0E	3	1 0 Storage Operand Breakpoint
			1 1 All References Breakpoint
13	0D		Breakpoint Interrupt (Breakpoint Stop if Clear)
12	0C		Micro Breakpoint, Step, Go. Stop (Macro if Clear)
11	0B		Step
10	0A	2	Selective Stop
09	09		Selective Skip
08	08		Protect Switch

TABLE 7A-2. FUNCTION CONTROL REGISTER (FCR) (Contd)

Bit		Digit	Bit Definition
07 06 05 04	07 06 05 04	1	DISPLAY 1
03 02 01 (MSB) 00	03 02 01 00	0	DISPLAY 0

TABLE 7A-3. DISPLAY CODE DEFINITIONS

Code	Display 1	Display 0	Code	Display 1	Display 0
0 0 0 0 0	FCR	F2 (Addressed by N)	8 1 0 0 0	SM1	
1 0 0 0 1	P†	N (MSBs)††	9 1 0 0 1	M1 $\overline{\text{RTJ}}$	
2 0 0 1 0	I	K (LSBs)††	A 1 0 1 0	SM2	
3 0 0 1 1		X	B 1 0 1 1	M2	
4 0 1 0 0	A	Q	C 1 1 0 0	MM	
5 0 1 0 1	MIR	F	D 1 1 0 1	A*	
6 0 1 1 0	BP/P-MA (Display Only)	F1 Addressed by K Enabled by SM111	E 1 1 1 0	X*	
7 0 1 1 1	P-MA (Display Only)	MEM	F 1 1 1 1	Q*	

† Used to address macro memory. Automatically incremented after each memory reference.

†† The combined contents of these two registers are used to address micro memory. The K register is automatically incremented after each memory reference. The N register does not automatically increment.

BREAKPOINT PANEL

Maintenance of the breakpoint panel does not require any special tools or diagnostics. Tools and aids necessary to execute the DDLTs are identified in the procedures and tables associated with the breakpoint panel.

COMMUNICATIONS LINE ADAPTER

The on-site maintenance personnel will be provided with no special tools for the DCCLA maintenance. Tools and aids necessary to execute the DDLTs are specified in other sections of this manual that are applicable to associated equipments.

DIAGNOSTICS

On-site personnel require the following ODS diagnostic card decks.

- CLA1A - Performs a wrap-around echo check on one channel of a communication line adapter. Part numbers are found in Table 7A-1.
- CLA2A - Performs a wrap-around echo check on both channels of the communications line adapter. Part numbers are found in table 7A-1.

NOTE

The diagnostic tests can only be performed in a system including a card reader of tape cassette transport, a console display, and a CYBER 18-20 or 30 Timeshare processor.

CARD READER

DIAGNOSTICS

The card reader diagnostic (CR104-11, CRUT1-16, CRUT2-17) requires a test data deck comprised of three card types separated by an end-of-deck card (figure 7D-1).

The on-line test deck of punched cards consists of cards of different colors within an acceptable color range as defined in USA Standard X3.11, dated 1966. The patterns on each card required for the on-line read and calibration test are:

- General data, buff and blue (figure 7D-2) deck number 1

  Representative data:

  Sliding ones
  All channel
  Skew
  Blanks
  Checker board

  This deck is used for sections 3, 4, and 5 of the card reader diagnostic.

- Read adjust, buff (figure 7D-3), deck number 2. This deck is used only by CRUT1 of the card reader diagnostic. CRUT1 is run in conjunction with calibration procedure D31.

- Sync adjust, buff (figure 7D-4), deck number 3. This deck is used only by CRUT1 of the card reader diagnostic. CRUT1 is run in conjunction with calibration procedure D31.

The off-line test deck of punched cards consists of cards of different colors within the acceptable color range as defined in USA Standard X3.11, dated 1966. The patterns on each card are required for three basic tests:

- Skew pattern, buff (figure 7D-5), deck number 5
- Read adjust, buff (figure 7D-3), deck number 2
- Amplifier settling check, blue (figure 7D-6), deck number 4
- CRUT2 is used to verify card reader timing. Part numbers are found in table 7A-1.

TEST EQUIPMENT

Maintenance personnel are provided with the following special test equipment:

- Multimeter – dc, 0 V dc through 50 V dc, accuracy 2 percent minimum, 20 thousand ohm/V; 0 V ac through 250 V ac accuracy 3 percent minimum.
- Feeler gauge set – The feeler gauge is 0.008 inch.
- Feed plate adjustment gauge – The feed plate adjustment gauge is part number 73715400.

If higher level maintenance is required, the following test equipment is required for on-line and off-line checks:

- Oscilloscope – Dual trace, dc to 10 MHz minimum, calibrated triggered sweep (Tektronics Model 453).

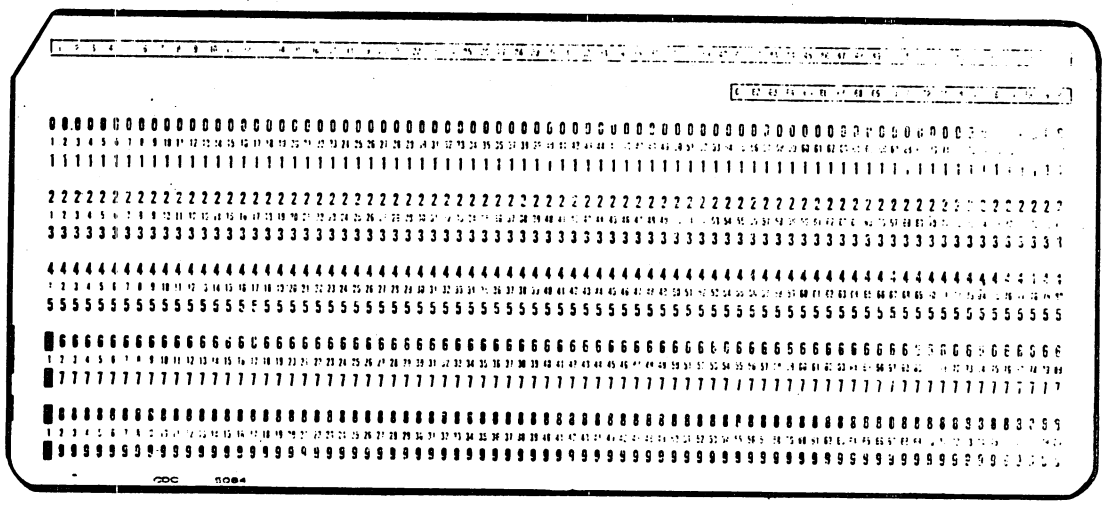

Figure 7D-1. End-Of-Deck Card

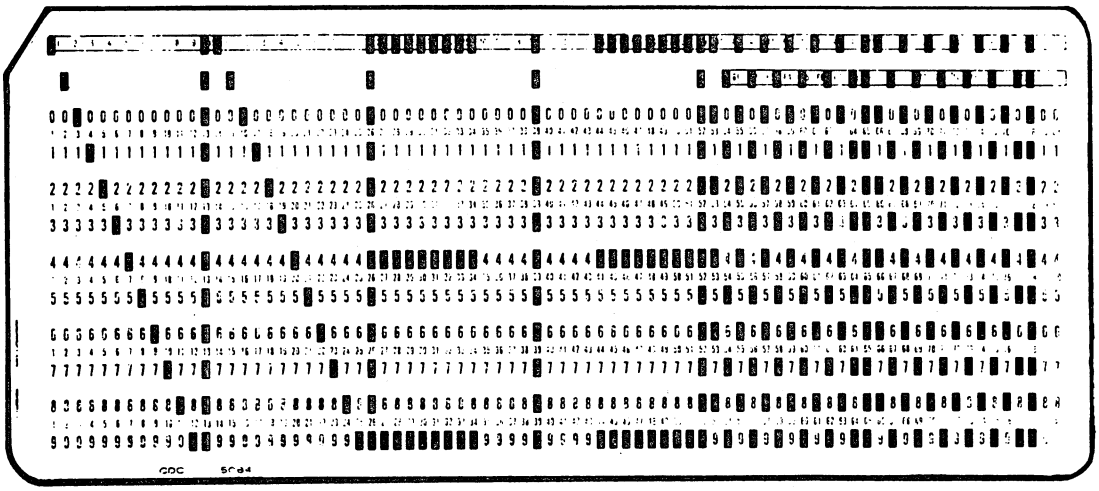

Figure 7D-2. General Data Card

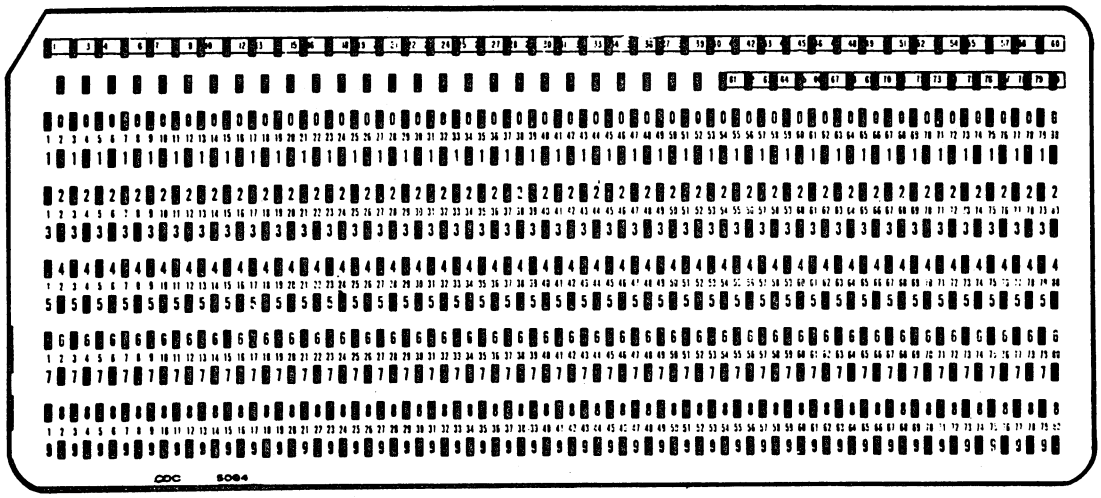

Figure 7D-3. Read Adjust Card

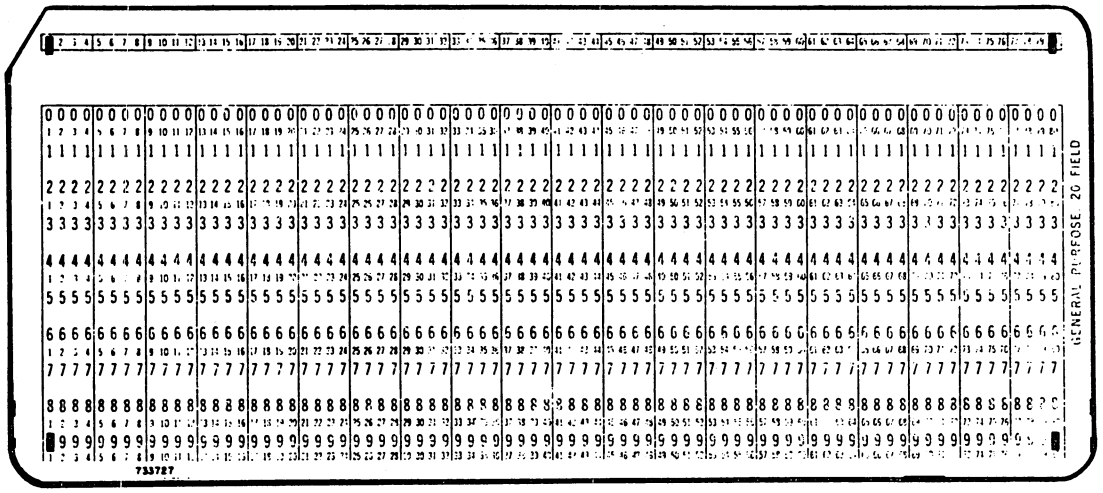

Figure 7D-4. Sync Adjust Card

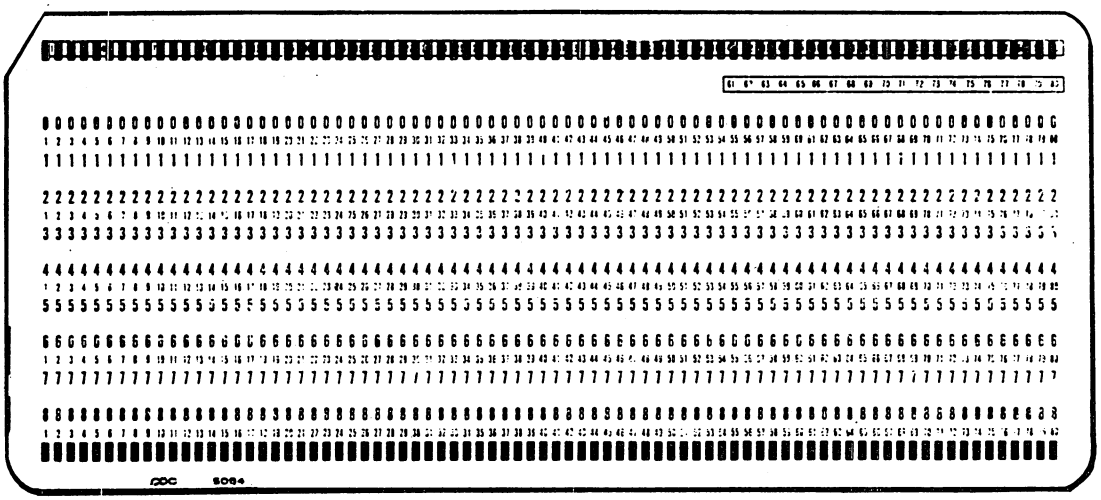

Figure 7D-5. Skew Adjust Card

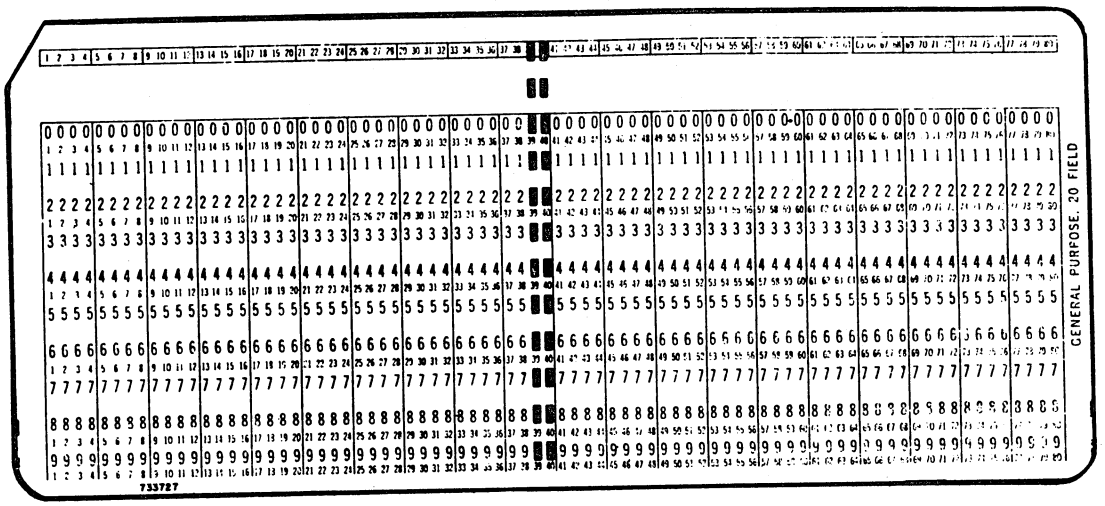

Figure 7D-6. Amplifier Setting Card

TROUBLE SHOOTING

Reader malfunctions are isolated with respect to the point in time that an error is noted in the overall card feed/read cycle. The error indicators (table 7D-1) facilitate rapid identification of the time point of a failure indication. Table 7D-2 provides a rapid reference to problem areas associated with major symptoms and/or error indicators.

ERROR INDICATORS

Each of the seven light emitting diode type error (alarm) indicators on the control board provides technical support maintenance personnel with an indication of the probable nature of a reader malfunction; i.e., the point in the operational sequence where the error occurred. These indicators are located along the bottom edge of the control board when it is opened out for access. Table 7D-1 lists and describes the individual indicator functions.

INTERFACE SIGNALS

The interface signals between the card reader and the card reader/line printer controller are described below. The pin assignments are shown in figure 7D-7.

Input Signals

External Start

External start (ES) is an input command signal that, when true, initiates drive motor turn-on and conditions the reader ready logic to accept a feed command provided no error condition exists.

TABLE 7D-1. ERROR INDICATORS

Indicator	Meaning
FEED ERR	Two successive card feed attempts failed to produce an image true condition; i.e., leading edge detection
LIGHT ERR	Read head sensors failed to detect all light prior to column 1 and immediately following leading edge detection
ILLEGAL FEED ERR	The transport motor is running and the image is true prior to a valid feed command; i.e., a card has been fed without command.
EARLY DARK ERR	All channels sense dark at the end of column 82 (prior to the card leaving the read station).
LATE DARK ERR	The card is still under the read head at subcount 9, column 84 time.
STACK ERR	A card presence is detected under the read head at reference column 89 time.
SYNC ERR	A loss of basic timing pulses.

TABLE 7D-2. TROUBLESHOOTING GUIDE

Symptom or Error Indicator	Probable Cause	Action
Card reader failure to power-up	Improper input power connection	Check and then correct
	Blown fuse	Check and then replace
	Defective power supply components	Perform procedures D5 and D6. If in error condition, perform procedure D24.
Card reader fails to power-off	Defective zero crossover detector in power supply	Perform procedure D24.
Drive motor does not turn	Control switch defective	Perform procedure D9.
	Motor start logic defective	Perform procedure D13.
	Interface command level (ES) not set true	Perform procedure D12. If still in error, perform procedure D25.
	Power supply defective	Perform procedure D24.
	Motor defective	Perform procedure D15.
Card reader fails to feed (FEED ERR indicator on)	Card contacting surface of drum is excessively dirty	Inspect and then clean according to procedure D19.
	Throat gap restrictively tight	Inspect and then adjust according to procedure D23.
	Hopper empty switch defective	Inspect according to procedure D7. Replace according to procedure D26.
	Stacker full switch defective	Perform procedure D8.
Fails to feed (FEED ERR indicator on)	Feed plate mechanical bound	Inspect and then clear.
	Control logic element defective	Perform procedure D13.
	Feed plate solenoid defective	Replace according to procedure D20.
Invalid feed (ILLEGAL FEED ERR)	Logic element in feed control loop defective	Perform procedure D13.
	Solenoid spring weak or damaged	Inspect and then replace according to procedure D27.
	Feed plate alignment with drum surface incorrect	Inspect and then adjust according to procedure D27.
Invalid feed, i.e., double feed (LATE DARK ERR and STACK ERR indicators on)	Throat gap setting excessively open	Inspect and then adjust according to procedure D23.
	Feed plate up/down travel incorrect	Perform procedure D27.
	Timing invalid	Perform procedure D11.
Read check light fault (LIGHT ERR indicator on)	Bent or missing corner on card	Check the deck for a missing or bent card.
	Read head lamp voltage low	Perform procedure D11 to adjust the read lamp.
	Logic element in image loop	Perform procedure D12.
	Read channel component defective	Perform procedure D14.

TABLE 7D-2. TROUBLESHOOTING GUIDE (Contd)

Symptom or Error Indicator	Probable Cause	Action
Read check light fault (EARLY DARK ERR indicator on)	Timing lamp defective	Perform procedure D22.
	Timing disk or mask damaged or incorrectly positioned	Perform procedure D29.
	Timing phototransistor pickup defective	Perform procedure D28.
	Logic element in early dark test loop defective	Perform procedure D13.
Read check light fault (LATE DARK ERR indicator on)	Throat gap setting excessively tight	Perform procedure D23.
	Read head gap excessively tight	Perform procedure D14, steps 13 through 15, if incorrect, and then adjust.
	Feed plate fingers not in line	Perform procedure D27.
	Logic element in late dark test loop defective	Perform procedure D13.
Read check light fault (SYNC ERR indicator on)	Timing lamp defective	Perform procedure D22.
	Timing channel phototransistor defective	Perform procedure D28.
	Timing amplifier channel defective	Perform procedure D11.
	Logic element in sync test loop defective	Perform procedure D13.
Data Errors	Bad skew or read lamp intensity too low	Perform procedure D18 and amplifier adjustments per procedure D11.
	Bad read channel	Perform procedure D11.
		Perform procedure D12.
		Perform procedure D13.
	Read head defective	Perform procedure D14.
Card Damage (No other alarm/malfunctions present)	Stacker springs defective	Perform procedure D16.

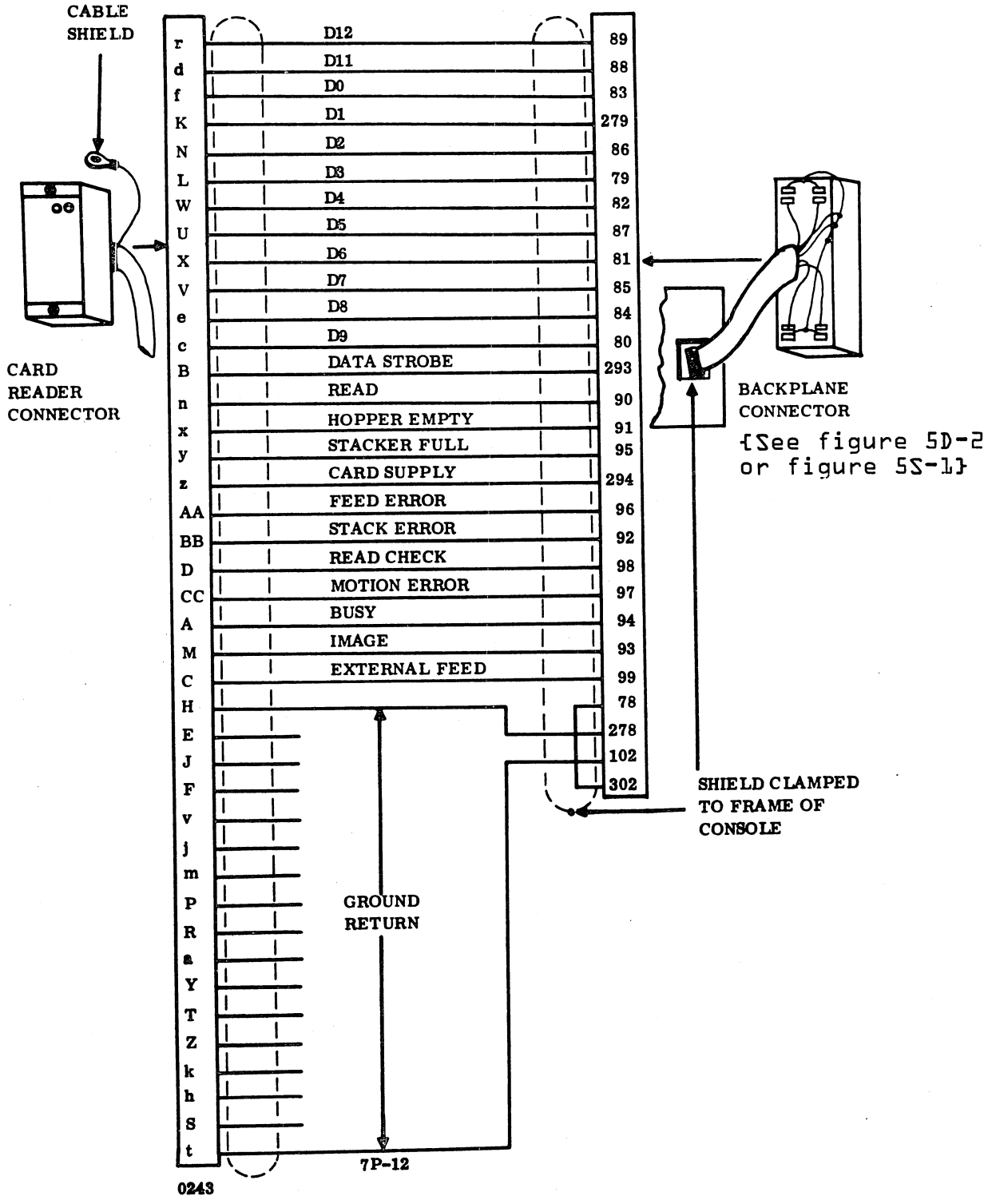

Figure 7D-7. I/O Cable Pin Assignment

External Feed

External feed (EF) is an input command signal that, when true, initiates a card feed and read cycle. The signal is only accepted by the card reader when the card reader is not busy and ready.

A minimum pulse width of 1 microsecond causes a single card to be fed and read. If the EF signal persists beyond the end of the card cycle, it is interpreted as a continuous feed, causing an additional card to be fed and read. EF may be a dc level that causes cards to process at the reader's maximum rate.

External Stop

External stop (EP) is an input command signal that, when true, stops the card reader and makes it not ready. If a card cycle is in process, that cycle is completed before the card reader stops.

Output Signals

Data

Twelve buffered data lines correspond to the data rows on the punched cards. The signal is true for one full column (16 clock pulses).

Data Strobe

The data strobe (DS) signal indicates that data has stabilized on the data lines and is ready for acceptance.

Ready

The ready (R) signal indicates that no error conditions exist. If the RESET switch is pressed or if the hopper empty, read, or stacker full errors occur, ready remains true until the end board is completed. Sync error or feed error causes the ready signal to go not true upon detection of the error.

Hopper Empty

The hopper empty (HE) signal indicates that the input hopper is empty and the last card has been used.

Stacker Full

The stacker full (SF) signal indicates that the stacker is full and the last card fed has been read.

Card Supply

The card supply (CS) signal indicates that the hopper empty or stacker full condition exists.

Feed Error

The feed error (FE) signal indicates that the reader was not able to feed the bottom card from the deck after two feed attempts (initial feed and second feed attempt).

Stacker Error

The stacker error (SE) signal indicates a jam in the card path from the read station to the stacker and double feed or timing error.

Read Check

The read check (RC) signal indicates a read station failure, possible data error, or damaged card at the leading or trailing edge (refer to section 3, volume 1).

Motion Error

The motion error (ME) signal indicates a read station failure or possible data error. A composite of the following may cause this condition:

Feed error

Stacker error (jam)

Busy

The busy (B) signal indicates that a feed or read cycle is in process and the reader will not accept a feed command. The leading edge of B indicates a feed command has been accepted.

Image

The image (I) signal indicates that a card is in the read station. The signal encompasses the time frame of all 80 data strobes and all timing error checks. No data strobes or timing error checks are generated if I is not present.

AC On

AC on indicates power is on and the +5 V dc supply is up. The line is open when the power is off and must be terminated through a resistor to +5 V dc externally. Termination is to be compatible with 7416 driver specifications. Output is low when the +5 V dc power supply is up.

CONSOLE DISPLAY

DIAGNOSTICS

The on-site maintenance personnel will be provided with the console display subsystem diagnostic card deck CRT5A5. Part numbers are found in table 7A-1. When testing the console display, it is necessary to set the mode switches (figure 7E-1) to the page mode configuration. See table 7E-1.

TEST EQUIPMENT

The following test equipment is required:

- Multimeter – 0 V dc through 500 V dc, accuracy 2 percent minimum, 20K ohm/V; 0 V ac through 250 V ac, accuracy 3 percent minimum
- Wire – 12-inch heavy insulated wire (16 AWG) with insulation stripped approximately 1/2 inch on each end.
- Safety Goggles – One set
- Heavy Gloves – One pair

If higher level maintenance is required, the following additional maintenance tools are needed:

- Oscilloscope – Dual trace, dc to 10 MHz minimum, calibrated trigger sweep (Tektronics model 546).

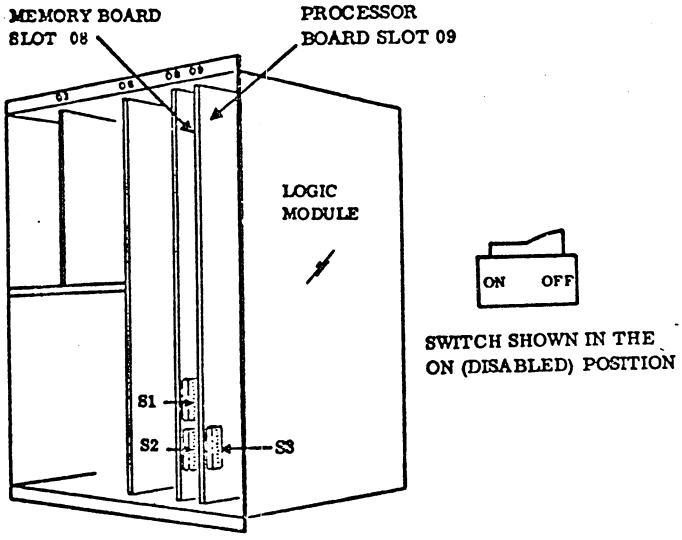

Figure 7E-1. Console Display Mode Select – Switches

MODE SELECTION

When performing ODS tests on the CYBER 18-20/30 Timeshare systems it is more convenient at times to select an alternate mode of operation. Table 7E-1 defines switch settings for the page mode and table 7E-2 defines switch settings for the scroll mode. Location of switches is shown in figure 7E-1.

TABLE 7E-1. PAGE MODE

Switch Segment	SW 1		SW 2		SW3	
	On	Off	On	Off	On	Off
1		X	X		X	
2		X		X	X	
3		X		X		X
4		X	X			X
5	X			X		X
6		X		X		X
7	X			X	X	
8	NA	NA	NA	NA	X	
9	NA	NA	NA	NA	X	
10	NA	NA	NA	NA		X

TABLE 7E-2. SCROLL MODE

Switch Segment	SW1		SW2		SW3	
	On	Off	On	Off	On	Off
1	X		X		X	
2	X		X		X	
3		X	X			X
4		X	X			X
5	X			X		X
6		X		X		X
7	X			X	X	
8	NA	NA	NA	NA	X	
9	NA	NA	NA	NA	X	
10	NA	NA	NA	NA		X

LINE PRINTER

DIAGNOSTICS

The on-site maintenance personnel will require the line printer diagnostic LP408. Part numbers are found in table 7A-1.

TEST EQUIPMENT

The following standard maintenance tools are required:

- Multimeter – 0 V dc through 50 V dc, accuracy 2 percent minimum, 20K ohm/V; 0 V ac through 250 V ac, accuracy 3 percent minimum
- Retaining ring pliers – Assorted sizes, combination type
- Allen wrench – Extra long required for hammer bank removal (part number 87578400)
- Wrench assortment – Open end, including 1/4-inch hex socket drive
- Cleaning compound – Chlorothene-Nu; one gallon can for print drum cleaning (part number 12210971)
- Cleaning brush – Part number 95309700
- Vacuum cleaning – Hand-held brush and nozzle type
- Cloth or paper towels
- Soldering irons – Six watt and 37-1/2 watt recommended
- Extractor tool – AMP type 455822 for all cable connectors (part number 95329800)
- Extractor tool – AMP type 305183-2 for I/O connector pins (part number 95307000)
- Circuit board extender – Part number 50550500
- Set-up format tape – Part number 44713801

If higher level maintenance is required, the following additional maintenance tool is needed:

- Oscilloscope – Dual trace, dc to 10 MHz minimum, calibrated trigger sweep (Tektronics model 546)

MAGNETIC TAPE TRANSPORT

DIAGNOSTICS

Maintenance personnel use the magnetic tape transport diagnostic {LCTTA}. Part numbers are found in table 7A-1.

TEST EQUIPMENT

Maintenance personnel require the following test equipment:

- Multimeter – 0 V dc through 50 V dc, accuracy 2 percent minimum, 20 Kohm/V; 0 V ac through 250 V ac, accuracy 3 percent minimum
- Magnetic tape – 400 foot spool (part number 46753297)
- Potentiometer – 25 ohms, ±10 percent, 5 V dc part number 86734700
- Card extender – Part number 59516400
- Card puller – Part number 86732000
- Vacuum gauge – Part number 93108003 (30 inches of water)
- Connector tube to female pipe – Part number 94694303, used in vacuum adjustment
- Tee fitting – Part number 95854000 (0.025 inch), used in vacuum adjustments
- Tubing – Part number 94692105 (3 feet, 0.025 inch ID), used in vacuum adjustments

If higher level maintenance is required, the following additional maintenance tool is needed:

- Oscilloscope – Dual trace, dc to 10 MHz minimum, calibrated trigger sweep (i.e., Tektronics Model 546)

TAPE CASSETTE TRANSPORT

DIAGNOSTICS

Maintenance requires the use of the following ODS diagnostics:

- LODCHK
- Echo (cassette controller)
- ODS Monitor
- Cassette

Part numbers for the above diagnostics are found in table 7A-1.

TEST EQUIPMENT

No test equipment other than the normal complement of tools is required by site maintenance personnel.

STORAGE MODULE DISK DRIVE

DIAGNOSTICS

On-site maintenance personnel require the following ODS diagnostics:

SMDDA- Performs test verification on the storage module drive interface. Part numbers are listed in table 7A-1.

SMDCU- Performs test verification on the storage module drive control unit. Part numbers are listed in table 7A1.

SMD01- Performs test verification on the storage module drive. Part numbers are listed in table 7A-1.

SMDUT- This test provides a utility for use in SMD drive head and series adjustments.

TEST EQUIPMENT

The following standard maintenance tools are required:

Multimeter - 0V dc through 50 V dc, accuracy 2% minimum, 20K ohm/V; 0V ac through 250 V ac, accuracy 3% minimum.

Lubricant - Molycote G (part number 12210957)

Lockscrew - Part number 70458600

Logic board extractor - Part number 87399200

Phillips and flat blade screwdrivers 14 inch shaft

Phillips and flat blade offset screwdrivers

If higher level maintenance support is required, the following additional maintenance tools are needed:

Oscilloscope - Dual trace, dc to 10 MHz minimum, calibrated trigger sweep (Tektronics Model 546)

Head alignment kit - Part number 77440500

CE alignment pack - Part number 70438700

PROCEDURE FOR SMD READ/WRITE HEAD ARM ALIGNMENT

Check and adjustment for the SMD (BJ701) using ODS (Operational Diagnostic System) test SMDUT and a Head Alignment Kit (P/N 77440500) on a Cyber 18 system:

Reference documentation required:

1. BJ701 HMM 83311300
2. ODS Reference Manual 39452100 (12/76 update)
3. Head Alignment Kit & Procedure PIN7744 0500

Alignment Check:

1. Load ODS Test SMDUT. CRT should display:

   SMDUT executing

   SMDUT suspended BOT

2. At the CRT enter:

   "GO" followed by a carriage return.

   CRT should display:

   SMDUT Section 0002

   Install Heat Alignment Kit

   Install CE Disk Pack

   Change LU and density parameters if required.

   SMDUT suspended self.

3. A. Power off SMD and install Head Alignment Kit and CE pack.

   B. Power on SMD and perform thermal stabilization as required by BJ701 HMM.

   C. At the CRT, change SMDUT run parameter Word 9 to match logical unit of drive to be tested if required. Test is present to Logical Unit "b".

NOTE

Due to a problem in the pre-release version of test SMDUT, a seek time range error will be reported at various times throughout the test. This is an informative message only and will not cause an error halt. Actual time reported should = $0010.

4. At the CRT enter:

   "GO" followed by a carriage return.

A. Once the operator has entered "GO" followed by a carriage return, the section selects the specified drive issues an RTZ command, and then performs seeks between cylinders 240 and 245 for 30 seconds. At the completion of this, the section issued an RTZ command, reseeks to cylinder 245 outputs the following message and suspends itself.

CHECK SERVO ADJ.

SMDUT SUSPENDED SELF

NOTE:

When using Head Alignment Card, insure that:

1. Power indicator is "ON"
2. Input and bad track indicators are "OFF"
3. Mode indicator is "ON" only when checking SERVO HEAD.
4. S3 is set to X1 when calculating offset.

B. Calculate Servo Head offset. Reference BJ701 HMM for procedure. If Servo Head offset does not meet requirements, take corrective action and restart the test.

5. At the CRT enter:

"GO" followed by a carriage return.

A. The drive will do a RTZ seek and then a seek to cylinder 245. The CRT will then display:

HEAD 0

SMDUT SUSPENDED SELF.

B. Calculate and make note of head 0 offset. Reference BJ701 HMM for procedure.

6. At the CRT enter:

"GO" followed by a carriage return.

A. The CRT will display:

HEAD 1

SMDUT SUSPENDED SELF.

B. Calculate and make note of HEAD 1 offset.

7. At the CRT enter:

"GO" followed by a carriage return.

A. The CRT will display:

HEAD 2

SMDUT SUSPENDED SELF.

B. Calculate and make note of HEAD 2 offset.

8. At the CRT enter:

"GO" followed by a carriage return.

A. The CRT will display:

HEAD 3

SMDUT SUSPENDED SELF.

B. Calculate and make note of HEAD 3 offset.

9. At the CRT enter:

"GO" followed by a carriage return.

A. The CRT will display:

HEAD 4

SMDUT SUSPENDED SELF

B. Calculate and make note of HEAD 4 offset.

10. At the CRT enter:

"GO" followed by a carriage return.

The CRT will display:

INSURE THAT LOCKING PIN HAS BEEN REMOVED.

PERFORM TORQUE ADJ. IF REQD.

SMDUT SUSPENDED SELF.

11. Check all noted head offsets to insure they meet specification set by BJ701 HMM. If any data head does not meet these specifications or a data head or Servo Head is replaced go to adjustment section item 13. If not:

A. At the CRT enter:

"GO" followed by a carriage return.

The CRT will display:

CHANGE PARAMETER WORD D TO 0 TO STOP.

SMDUT SUSPENDED SELF

B. At the CRT enter:

D, 0 followed by a carriage return.

"GO" followed by a carriage return.

The CRT will display:

SMDUT SUSPENDED ENDS

C. At the CRT enter:

"GO" followed by a carriage return.

The CRT will display:

SMDUT COMPLETED XXXX PASSES.

SMDUT SUSPENDED SELF.

12. Prepare drive for on-line operation.

A. Remove CE pack

B. Power off drive and remove Head Alignment Kit.

C. Power up drive and install scratch pack.

D. Run 1 pass of SMDDA, SMDCU and SMD01

ADJUSTMENT:

13. Assumption:

A. Entry is made from number 11 of alignment check section.

B. Drive has been stopped and head mounting screws of heads to be adjusted are loosened to a torque of 4± 1/2 in lbs.

14. Start drive and insure heads are loaded.

15. At the CRT enter:

A.1, 5CE followed by a carriage return. (set repeat subsection bit)

B. "GO" followed by a carriage return.

The drive will perform a RTZ and seek to Cylinder 254

CRT will display:

HEAD "0"

SMDUT SUSPENDED SELF

16. Each succeeding "GO" followed by a carriage return entered at the CRT will advance the head selection and CRT will display head message and test will suspend itself.

17. Select head to be adjusted.

18. Ground connector Pin A04-03B (on cylinder) to prevent a seek error from attempting to reposition the carriage, per Service Bulletin SB3116.

19. Install carriage locking pin and do head adjustment per BJ701 HMM.

WARNING

With locking pin in and Pin A04-03B grounded, do not advance test past locking pin message, stop drive or anything else that may cause carriage movement or a fuse in the drive will blow.

20. After HEAD 4 has been selected and a "GO" followed by a carriage return has been entered at CRT, the CRT will display the locking pin message.

A. Remove locking pin.

B. Remove ground from A04-03B.

C. Press start switch to stop drive motor and unload heads.

D. Torque head clamp screws to 12± 1/2 in lbs.

E. Press start switch to start drive motor and load heads.

21. Starting at Stop 2B, repeat steps through 7B and readjust any head requiring it per BJ701 HMM.

22. CRT should be displaying locking pin message.

At the CRT enter:

A. 1, 4CE followed by a carriage return.

B. "GO" followed by a carriage return.

CRT will display:

Change Parameter Word D to 0 to stop

SMDUT SUSPENDED SELF.

23. At the CRT enter:

"GO" followed by a carriage return.

The section will then reselect the drive and perform a RTZ then seek between Cylinders 240 and 245 for 30 seconds. At the completion of this time period the operator is instructed to unload and load the heads on the drive twice. To accomplish this the section prints out the following message and waits for the appropriate change in drive status 2 four times:

PRESS AND RELEASE START BUTTON

After the drive has come ready for the second time the section will perform a RTZ and a seek to cylinder 245 and the CRT will display:

HEAD "0"

SMDUT SUSPENDED SELF.

24. Check and adjust heads requiring it per BJ701 HMM by repeating steps 16 through 20B.

25. CRT should be displaying locking pin message.

A. At the CRT enter"

"GO" followed by carriage return

CRT will display:

CHANGE PARAMETER WORD D TO 0 TO STOP.

SMDUT SUSPENDED SELF.

B. At the CRT enter:

D, 0 followed by a carriage re-return.

"GO" followed by a carriage re-turn.

The CRT will display:

SMDUT SUSPENDED ENDS

C. At the CRT enter:

"GO" followed by a carriage return

The CRT will display:

SMDUT COMPLETED XXXX PASSES

SMDUT SUSPENDED SELF.

26. Prepare drive for on-line operation.

A. Remove CE pack.

B. Power off drive and remove Head alignment Kit.

C. Power up drive and install scratch pack.

D. Run 1 pass of SMDDA, SMDCU and SMD01.

FLEXIBLE DISK DRIVE

DIAGNOSTICS

Maintenance requires the use of the following ODS diagnostics:

- LODCHK
- ODS Monitor
- FDSKA

Part numbers for the above diagnostics are found in table 7A-1.

TEST EQUIPMENT

No test equipment other than the normal complement of tools is required by site maintenance personnel.

KEYBOARD **DISPLAY**

DIAGNOSTICS

The on-site personnel will require the keyboard display terminal diagnostic LIAT1. Part numbers are found in TABLE 7A-1.

TEST EQUIPMENT

The following test equipment is required:

- Multimeter – 0 V dc through 500 V dc, accuracy 2 percent minimum, 20K ohm/V; 0 V ac through 250 V ac, accuracy 3 percent minimum
- Wire – 12-inch heavy insulated wire (16 AWG) with insulation stripped approximately 1/2 inch on each end.
- Safety Goggles – One set
- Heavy Gloves – One pair

If higher level maintenance is required, the following additional maintenance tools are needed:

- Oscilloscope – Dual trace, dc to 10 MHz minimum, calibrated trigger sweep (Tektronics model 546).

DIAGNOSTICS

The onsite maintenance personnel will be provided with the UTOPIA/MSMP cassette #2 (P/N 12323182) which contains the MST 041 Multiplex Subsystem test. In addition, the ODS Level I cassette (P/N 96754400) may be required.

TEST EQUIPMENT

Multimeter - dc, 0-50v, accuracy 2 percent minimum, 20 thousand ohm/v.

Tools - Normal compliment as required by site maintenance personnel.

Test Connector - If testing the RS-232 Modem Drivers of the 2561-1 ACLA, External Test Connector (P/N 74715600) will be required.

If maintenance support is required, the following test equipment is required for testing:

Oscilloscope - Dual trace, dc - 10MHz minimum, calibrated trigger sweep (Tektronics model 546)

1 X 8 CHANNEL COMMUNICATIONS LINE ADAPTER

The on-site maintenance personnel will be provided with a Loop-Back cable, which will enable any one channel to communicate with any other channel of the CE's discretion. This cable is considered a signal cable and part numbers can be found in section 8N. Tools and aids necessary to execute the DDLT's are specified in other sections of this manual that are applicable to associated equipment.

Diagnostics

On-site personnel require the following ODS diagnostic packages:

CLACD - Performs tests that check the operational capabilities of the 1 X 8 CH. CLA when interfaced with a CDT - CC555.

CLAMP - This is the matrix printing diagnostic.

CLA8L - Used in conjunction with the Loop-Back cable.

NOTE: The diagnostic tests can only be performed in a system which includes a load device (cassette or FDD), a console display, and a CYBER 18-10M, 18-20 or 30 Timeshare processor.

7P-1 MATRIX PRINTER

The on-site maintenance personnel will be provided with the Matrix Printer Diagnostic CLAMP. This diagnostic will require a 1 x 8 Channel Communications Line Adapter and its associated signal cable. Part numbers can be found in section 8P.

NOTE: This diagnostic (CLAMP) is part of ODS version 2.0 and can only be performed in a system which includes a load device (cassette or FDD), and a CYBER 18-10, 18-20, or 18-30 Timeshare processor.

CARTRIDGE DISK DRIVE

DIAGNOSTICS

On-site maintenance personnel require the following ODS diagnostics:

- CDD1 - Performs test verification on the cartridge disk drive controller.
- CDD2 - Performs test verification on the cartridge disk drive.

TEST EQUIPMENT

Maintenance personnel require the following test equipment:

Description	CDC Part Number
• Plastic Feeler Gauges	Commercially available plastic shim
• Head Alignment Tool *	75797900
• Bulb Removal Tool	83439200
• OEM Field Tester (2400 RPM) *	75279303
• OEM Field Tester (1500 RPM & 2400 RPM) *	75279305
• CE Disk Cartridge Model 847-51 *	89296000
• Card Extender	75861504
• Card Extractor	83485801 (or equivalent) **
• Fault Board Kit, including:	83457801
Fault Board	75863202
Instruction Manual	75535900
• Armature Plate Simulator *	83455500
• Torque Screwdriver 1-30 in/lbs with Hex Bit Adapter and Phillips Adapter	Commercially available
• Pin Extractor for Voltage Plug A1P12 Molex Products Corp. HT-2038 Extractor	Commercially available
• Ball Allen Drivers (1/16, .050, 9/64, 5/32, 3/32)	Commercially available

TEST EQUIPMENT (CONTINUED)

Description	CDC Part Number
• Multimeter - DC, 0 through 50V, accuracy 2 percent minimum, 20K ohm/V; AC, 0 through 250V, accuracy 3 percent minimum.	Commercially available
• Oscilloscope - Dual trace, DC to 10 MHz minimum, calibrated trigger sweep (i.e., Tektronics Model 546).	Commercially available

* this tool is needed only if higher level maintenance is required.

** WARNING: Exercise care to avoid damage to cards or to attached components when using card extraction tool.

MAINTENANCE MATERIALS

MATERIAL	SOURCE
Gauze, Lint-Free	Control Data 12209713
Media Cleaning Solution	Control Data 95033502
Loctite, Grade C	Loctite Corporation
Loctite Primer, Grade N	Loctite Corporation
Tongue Depressors	Commercially available
Tape, Vinyl Plastic	Control Data 95022700 or commercially available air conditioning duct tape one inch wide.
Adhesive (RTV 108)	Commercially availavle

MAGNETIC TAPE TRANSPORT

DIAGNOSTICS

On-site maintenance personnel require the following ODS diagnostics:

- LCTT1 - Performs test verification on the magnetic tape controller.
- LCTT2 - Performs test verification on the magnetic tape formatter and magnetic tape transport

TEST EQUIPMENT

Maintenance personnel require the following test equipment:

Multimeter - DC, 0 through 50v, accuracy 2 percent minimum, 20 Kohm/v; AC, 0 through 250v, accuracy 3 percent minimum.

Magnetic Tape - 400 foot spool

Potentiometer - 25 ohms, ±10 percent, 5v part number 86734700.

Card Extender - Part number 59516400.

Card Puller - Part number 86732000.

Vacuum Gauge - Part number 93108003 (30 inches of water).

Connector Tube to Female Pipe - Part number 94694303, used in vacuum adjustment.

Tee Fitting - Part number 95854000 (0.025 inch), used in vacuum adjustments.

Tubing - Part number 94692105 (3 feet, 0.025 inch ID), used in vacuum adjustments.

If higher level maintenance is required, the following additional maintenance tool is needed:

Oscilloscope - Dual trace, DC to 10 MHz minimum, calibrated trigger sweep (i.e., Tektronics Model 546).

CARD READER/LINE PRINTER/COMMUNICATION
LINE ADAPTER

DIAGNOSTIC/TEST E@UIPMENT

CARD READER - refer to Section 7D

LINE PRINTER - refer to Section 7F

COMMUNICATION LINE
ADAPTER - refer to Section 7C

LINE PRINTER

DIAGNOSTICS

The on-site maintenance personnel will require the printer diagnostic card deck LP408. Part numbers are found in table 7A-1.

TEST EQUIPMENT

The following standard maintenance tools are required:

- o Digital voltmeter - four digit.
- o Screwdriver assortment - flat blade and phippips.
- o Soldering iron - G or 15 watt recommended.
- o Vacuum cleaner - with hand held brush and nozzle.
- o Wrench assortment - open end American sizes through 9/16 inch.
- o Hex key wrench set - .050 through 3/16 inch.
- o Ruler - 6 inch or metric equivalent.
- o Square - small right angle.
- o Torque wrench (0-50 in-lbs) (0-7m/kgs).
- o Oscilloscope - Dual, dc to 10mHz minimum, calibrated triggered sweep.

The following maintenance materials are required:

- o Alcohol - for general cleaning.
- o GE silicon grease - for print gate.
- o Bearing tape and adhesive - for platen.

The following special maintenance tools are required:

- o Band tracking/flight time tool (PN 44670888) Master Band (PN 44674186) - This tool is required (1) to adjust the print hammer actuator assemblies for proper print hammer flight time and (2) to adjust the left and right band drive pulley upper bearing locations for correct band tracking using a Master Band.
- o Connector pin extractor (AMP No. 458994-1) (CDC PN 94806769) - Used for removing connector pins from the connector block which plugs into the AC Select Board used in a special configuration, universal power supply. Optional, required only when AC select board is used.
- o Connector pin extractor (AMP No. 465644-1 (CDC PN 94806768) - Used for removing circular type pins from connector blocks attached to the Ribbon Motor cable connectors and the Paper Motion Verification sensor cable connector.
- o Connector pin extractor (AMP No. 91065-1) (CDC PN 94806770) Used for removing square type pins from connector blocks attached to circuit board D.C. power cables, D.C. power and signal connector cables 2PC2-P1, 2PC2-P2 and 2PC2-P4 on the Servo Amplifier board and D.C. power connector 2PC1-P1 on the Power Supply board.
- o Connector pin extractor (AMP No. 91052-1) (CDC PN 94806771) Used for removing pins from the Hammer Striker harness connectors which plug into the Hammer Driver circuit board (s).
- o Connector pin extractor (AMP 457241-1) (CDC PN 94806776) Used for removing pins from the Hammer Striker harness connectors which plug into the Hammer Driver circuit board (s).
- o Spring scale (McMaster Carr No. 136Y25 - acceptable alternate 20lb. No. 12210947) (CDC PN 94806772) For adjusting belt tensions, band tension. Push/Pull gauge to 5lbs or 2.5 Kilograms.

This section contains spare parts lists, equipment numbers, and part numbers for replaceable assemblies and components of the CYBER 18-20/30 Timeshare Computer Systems.

This section is divided into subsections that deal with each equipment in the CYBER 18-20 and 18-30 Timeshare systems. The codes used to identify each subsection are as follows:

Subsection	Equipment
8A	Processor, cabinet, and operators panel
8B	Breakpoint panel
8C	Communications line adapter
8D	Card reader
8E	Console display
8F	Line printer
8G	Magnetic tape
8H	Tape cassette
8J	Storage module drive
8K	Flexible disk drive
8L	Keyboard display terminal
8M	Communications multiplexer

PROCESSOR, CABINET, AND OPERATORS PANEL

Table 8A-1 is a list of replaceable assemblies and their part numbers.

TABLE 8A-1. PARTS DATA FOR PROCESSOR, CABINET, AND OPERATORS PANEL

Assembly	Equipment Number	Spare Part	Part Number
CYBER 18-20 Processor	AB113	–	96751900
		Printed wiring assembly, I/O-TTY	88919700
		Printed wiring assembly, SMI	88909100
		Printed wiring assembly, ALU	88909200
		Printed wiring assembly, Control 2	88909400
		Printed wiring assembly, Control 1	88919600
		Printed wiring assembly, Transform	88910100
		Printed wiring assembly, Memory interface - data	96740800
		Printed wiring assembly, Memory interface - address	96753817
		Cooling fans	88912000
CYBER 18-20 Cabinet	GH443	–	96744637
		Printed wiring assembly, Power sequencer	96743500
		Filter, ac line	96744778
		Circuit breaker	51683727
		Power supply, ±5 V dc	88782623
		Power supply, ±12 V dc	88782624
		Regulator, +12 V dc, -9 V dc, -5 V dc	88917300
		Bezel, operators panel	Front 96744883
			Back 96744882
		Switch, chromeric	96744793
		Switch, ac rocker	96744929
		Printed wiring assembly, panel control	96743737
		AC switch, triac	95326200
		Sensor, temperature (130, F)	51808108
		Filter, fan	88956102
		Fuse, 6.25 amperes, slo blo	65267704
		Sensor, temperature (140, F)	51808116
		Resistor assembly - 2K, 50 W	96753399

TABLE 8A-1. PARTS DATA FOR PROCESSOR, CABINET, AND OPERATORS PANEL (Contd)

Assembly	Equipment Number	Spare Part	Part Number
CYBER 18-30 Timeshare, processor 1	AB113	Same as processor for CYBER 18-20	
CYBER 18-30 Timeshare, processor 2	AA109	-	88916400
		Printed wiring assembly, I/O-TTY	88919700
		Printed wiring assembly, SMI	88909100
		Printed wiring assembly, ALU	88909200
		Printed wiring assembly, Control 2	88909400
		Printed wiring assembly, Control 1	88919600
		Printed wiring assembly, Transform	88910100
		Printed wiring assembly, Memory interface - data	96740800
		Printed wiring assembly, Memory interface - address	96740500
		Cooling fans	88912000
CYBER 18-30 Timeshare Cabinet	GH444	-	96744662
		Uses same spare parts as GH443 cabinet plus the following:	
		Printed wiring assembly, dual-system multiplexer	98743744
CYBER 18-xx power supplies	GD1225	-	88906900
		Power supply, ±5 V dc	88782623
		Power supply, ±15 V dc	88782624
		Power supply, MOS, regulator	88917300
Options:			
16K MOS memory	AT275-B	Printed wiring assembly	96745800
32K MOS memory	AT241-B	Printed wiring assembly	96745700
512-instruction micro-memory	BA209-A	Printed wiring assembly	88905100
2048-instruction micro-memory	BA210-B	Printed wiring assembly	96755900
Error correction code MOS array, 198K bytes	DT223B	Printed wiring assembly	96787400

BREAKPOINT PANEL

Table 8B-1 is a list of replaceable assemblies and their part numbers.

TABLE 8B-1. PARTS DATA FOR BREAKPOINT PANEL

Assembly	Equipment Number	Spare Part	Part Number
Panel	DT120	-	96744572
		Cable, interface	88879721
		Switch	88889100/01
		Indicator	88887100
Controller	FC402	Printed wiring assembly	96744570

COMMUNICATIONS LINE ADAPTER

Table 8C-1 is a list of replaceable assemblies and their part numbers.

TABLE 8C-1. PARTS DATA FOR COMMUNICATIONS LINE ADAPTER

Assembly	Equipment Number	Spare Part	Part Number
Communications line adapter	FJ441	Printed wiring assembly	15610300
		Cable, interface	61378100

CARD READER

Table 8D-1 is a list of replaceable assemblies and their part numbers.

TABLE 8D-1. PARTS DATA FOR CARD READER

Assembly	Equipment Number	Spare Part	Part Number
Card reader	CB104-K		96744453
		Drive motor	86973601
		Assembly, stacker drive	77178901
		Belt, stacker drive	95927200
		Assembly, feed solenoid	86876301
		Belt, drive	95848809
		Printed wiring assembly, timing	59534901
		Timing mask	86875700
		Timing disk	86875500
		Timing lamp	95878900
		Read head	86893501
		Read lamp	94687500
		Printed wiring assembly, control	59535104
		Printed wiring assembly, data	59540001
		Printed wiring assembly, read head amplifier	59535200
		Switch, hopper empty	95877502
		Switch, stacker full	95877501
		Indicator, hopper	95879001
		Indicator, power on	95879003
		Indicator, stack	95879002
		Indicator, read check	95879102
		Indicator, reset	95879101
		Cable, control	86879004
		Cable, amplifier	86879003

TABLE 8D-1. PARTS DATA FOR CARD READER (Contd)

Assembly	Equipment Number	Spare Part	Part Number
Card reader (Contd)	CB104-K	Cable, switch control	86879001
		Cable, read	86879002
		Fuse, 3 amperes - 115 V, 3 AG	51650224
		Fan	None
		Lamp, DL394	24512301
Controller/ Interface	FH301	Printed wiring assembly	88788600
		Cable, interface	88894500

CONSOLE DISPLAY

Table 8E-1 is a list of replaceable assemblies and their part numbers.

TABLE 8E-1. PARTS DATA FOR CONSOLE DISPLAY

Assembly	Equipment Number	Spare Part	Part Number
Console display	CC614-C	-	96744411
		Printed wiring assembly, +5 V Regulator	90393600
		Printed wiring assembly, video drive	90433000
		Printed wiring assembly, refresh control	90443500
		Printed wiring assembly, RAM/E-ROM	90443700
		Printed wiring assembly, extended memory	90442100
		Printed wiring assembly, processor	90398500
		Printed wiring assembly, video module	71456300
		Cathode ray tube	51907300
		Transformer, high voltage	61407417
		15-volt regulator	15130504
		Transformer, ac entry	51905600
		AC power panel	61371104
		Printed wiring assembly, bulk power supply	90421700
		Switch, test mode	51781602
		Switch, master clear	18797101
		Vertical choke coil	61407419
		Keyboard module	51907402
		Panel assembly, format	90411600
		Panel assembly, trans mode	90417300
		Deflection yoke	61407418
		Potentiometer, intensity control	51899042
		Switch, CHAR/LINE/BLOCK	51906401
		Switch, two-position	51906400
		Audible alarm	51908901
I/O-TTY controller	CW212-A	Printed wiring assembly	88909701
		Cable, interface	88894401

LINE PRINTER

Table 8F-1 lists the replaceable assemblies and their part numbers.

TABLE 8F-1. PARTS DATA FOR LINE PRINTER

Assembly	Equipment Number	Spare Part	Part Number
Line printer	CL408-C/ CL411-C	-	96744425
		Motor, ribbon gear	50675000
		Motor, ribbon torque	50674900
		Motor, print drum	50832702
		Switch, gate	50473300
		Armature striker	46401102
		Hammer	59799202
		Motor, horizontal drive	50616104
		Belt, idler pulley	94791700
		Belt, clutch pulley	92755067
		Forms reader brush	47905401
		Tractor assembly (right)	59650300
		Tractor assembly (left)	59650400
		Printed wiring assembly, vertical forms motion	50818000
		Printed wiring assembly, hammer drive	44814500
		Printed wiring assembly, hammer timing and select	50469700
		Printed wiring assembly, I/O	59635101
		Printed wiring assembly, ribbon drive	44865000
		Printed wiring assembly, brush reader	50644808
		Printed wiring assembly, address register and sub-scan	47828200
		Printed wiring assembly, status and paper motion	50993201
		Printed wiring assembly, format register and decoder	47786902
		Printed wiring assembly, print cycle timing	44998201

TABLE 8F-1. PARTS DATA FOR LINE PRINTER (Contd)

Assembly	Equipment Number	Spare Part	Part Number
Line printer (contd)	CL408-C/ CL411-C	Printed wiring assembly, MOS memory	47797901
		Printed wiring assembly, translator and oscillator	47787202
		Printed wiring assembly, output timing	47960200
		Printed wiring assembly, input control 1	50991901
		Printed wiring assembly, input control 2	47786401
		Printed wiring assembly, receiver/ transmitter	50888000
		Printed wiring assembly, test mode	47786001
		Power supply assembly	44796400
		Assembly, triac and reed relay	47927100
		Switch, control panel	44440107
		Ribbon	95330700
		Mylar ribbon shield	50994401
		Thermal switch (4SW1)	59702200
		Format tape	44713801
		Circuit breaker (CB01)	94809400
		Fuse, 15 amperes (5F03)	95647609
		Fuse, 15 amperes (5F01)	95586430
		Fuse, 1 amperes (5F02)	95647601
		Fuse, 2 amperes (hammer driver)	95339407
		Fuse, 5 amperes (clutch)	95339409
		Lamp (switch indicator)	95671101
		Switch, paper tear	94830200
Controller	FH301-A	Printed wiring assembly	88788600
		Cable, interface	88894600

MAGNETIC TAPE TRANSPORT

Table 8G-1 lists the replaceable assemblies and their part numbers.

TABLE 8G-1. PARTS DATA FOR MAGNETIC TAPE TRANSPORT

Assembly	Equipment Number	Spare Part	Part Number
Magnetic tape transport (7-track)	BW101-A	-	96744486
Magnetic tape transport (9-track)	BW303-A	-	96744489
		Printed wiring assembly I/O Logic:	
		7-track NRZI mode	59521601
		9-track dual mode	59522001
		Printed wiring assembly, control logic	59529101
		Printed wiring assembly, reel logic	59521201
		Printed wiring assembly, capstan logic:	
		7-track NRZI mode	59525901
		9-track dual mode	59524201
		Printed wiring assembly, read recovery logic:	
		7-track NRZI mode	59453201
		9-track dual mode	59455201
		Printed wiring assembly, NRZI read	59524001
		Printed wiring assembly, dual mode read	59524801
		Printed wiring assembly, NRZI write driver (five channel)	59473501
		Printed wiring assembly, dual mode driver logic (five channel)	59474301
		Printed wiring assembly, NRZI write logic (four channel)	59473401
		Printed wiring assembly, dual mode write logic (four channel)	59473501
		Reel power amplifier	59515701
		Capstan power amplifier	59515801
		Assembly, blower motor	86734401
		Lamp socket, bulb base	95869200

TABLE 8G-1. PARTS DATA FOR MAGNETIC TAPE TRANSPORT (Contd)

Assembly	Equipment Number	Spare Part	Part Number
Magnetic tape transport (9-track) (contd)	BW303-A	Bulb, wedge base	95873101
		Light source	95869300
		Switch, diff pressure	95868300
		Fitting, run tee	95873702
		Relay, enclosed	95868701
		Printed wiring assembly	59494001
		Assembly, control panel board	59514701
		Assembly, tach sensor	59516301
		Tachometer tape (25 inches per second)	86786400
		Capstan (25 inches per second)	86687300
		Motor, capstan (25 inches per second)	86690801
		Sensor, file protect (25 inches per second)	86702001
		Read head (seven track)	86690603
		Read head (nine track)	86690601
		Power supply	47544500
		Motor, reel (25 inches per second)	86721901
		Switch, interlock	62048203
		Switch, power	95868900
		Sensor, loop column	86734801
		Bulb, control panel (type 336)	95870400
		Fuse, 4 amperes	95647650
Controller	FA107-A	Printed wiring assembly	88919800
Translator	BW812-A	Printed wiring assembly	77233200
		Cable, controller to translator	96756700
		Cable, translator to transport	96790100

TABLE 8G-1. PARTS DATA FOR MAGNETIC TAPE TRANSPORT (Contd)

Assembly	Equipment Number	Spare Part	Part Number
Cabinet	GH447	PWA, AC Power Up Control 2	96754580
		Printed wiring assembly, power sequencer	96753829
		Filter, ac line	96744778
		Circuit breaker (5 amperes)	39283423
		Circuit breaker (10 amperes)	39283424
		Resistor assembly	96753399
		AC switch, triac	96754371
		Switch, Toggle SPST	96656600
		Cooling fan	88912000
		Sensor, temperature (130, F)	51808108
		Sensor, temperature (140, F)	51808116

TAPE CASSETTE TRANSPORT

Table 8H-1 lists the replaceable assemblies and their part numbers.

TABLE 8H-1. PARTS DATA FOR TAPE CASSETTE TRANSPORT

Assembly	Equipment Number	Spare Part	Part Number
Tape transport	BE602	-	88889802
		Tape cassette	12262298
		Power supply, +12 V dc	96744514
Controller	FA104-A	Printed wiring assembly	88908100
		Cable, interface, unit 0	96744894
		Cable, interface, unit 1	96744947

STORAGE MODULE DRIVE

Table 8J-1 lists the replaceable assemblies and their part numbers.

TABLE 8J-1. PARTS DATA FOR STORAGE MODULE DRIVE

Assembly	Equipment Number	Spare Part	Part Number
Storage module drive	BJ701-A	-	76420017
	BJ701-B	-	76420018
	BJ701-J BJ701-K	Fuse, 5 amperes, 250 volts, ABC	24513006
		Printed wiring assembly, ARSV	54146502
		Printed wiring assembly, 4THV	54162900
		Printed wiring assembly, HFRV	54226113
		Printed wiring assembly, ELPV	54275306
		Printed wiring assembly, DLQV	54275705
		Printed wiring assembly, GLRV	54276107
		Printed wiring assembly, CLSV	54276503
		Printed wiring assembly, ELTV	54276906
		Printed wiring assembly, FLTV	54276907
		Printed wiring assembly, ELUV	54277306
		Printed wiring assembly, LLVV	54277712
		Printed wiring assembly, FLWV	54278107
		Printed wiring assembly, CLXV	54278503
		Printed wiring assembly, 4LYV	54278902
		Printed wiring assembly, BLZV	54279303
		Printed wiring assembly, FZON	73485311
		Printed wiring assembly, FZJN	75061708
		Printed wiring assembly, EZKN	75062107
		Printed wiring assembly, 5ZGN	75243202
		Printed wiring assembly, BZYN	75072003
		Printed wiring assembly, 4ZFN	75242901
		Printed wiring assembly, AXPN	76423002
		Seal, air plenum	75063000

TABLE 8J-1. PARTS DATA FOR STORAGE MODULE DRIVE (Contd)

Assembly	Equipment Number	Spare Part	Part Number
Storage module drive (contd)	Bj701-A/B	Spring, ground	76408000
		Belt, FLT	92314113
		Fan, axial min.	94247100
		Filter, air	94364700
		Regulator assembly	47398100
		Brake, hysteresis assembly	75241500
		Motor, drive assembly	77394810
		Blower assembly	75240302
Control unit	FA727-D	-	77525005
		Circuit breaker, 4CB1	51683727
		Circuit breaker 4CB2	51683718
		Power supply assembly	77527000
		Printed wiring assembly, 5BFX	76896701
		Printed wiring assembly, 5BAX	76894701
		Printed wiring assembly, 5BBX	76895101
		Printed wiring assembly, ABBX	76895102
		Printed wiring assembly, BBBX	76895103
		Printed wiring assembly, 4BCX	76895500
		Printed wiring assembly, 5BEX	76896301
		Printed wiring assembly ABEX	76896302
		Printed wiring assembly, 5BLX	76898701
		Printed wiring assembly, BBMX	76899102
		Printed wiring assembly, CBMX	76899103
		Printed wiring assembly, 5BVX	76902301
		Printed wiring assembly, ABVX	76902302
		Printed wiring assembly, 5BNX	76899501
		Printed wiring assembly, ABNX	76899502
		Printed wiring assembly, 5BPX	76899901
		Printed wiring assembly, ABQX	76900301

TABLE 8J-1. PARTS DATA FOR STORAGE MODULE DRIVE (Contd)

Assembly	Equipment Number	Spare Part	Part Number
Control unit (contd)	FA727-D	Printed wiring assembly, 5BSX	76901101
		Printed wiring assembly, 5BTX	76901501
		Printed wiring assembly, 5BUX	76901901
		Printed wiring assembly, ABJX	76897901
		Printed wiring assembly, 5BWX	76902701
		Printed wiring assembly, 5BHX	76897501
		Printed wiring assembly, 5BGX	76897101
		Printed wiring assembly, ABGX	76897102
		Printed wiring assembly, ABKX	76898301
		Printed wiring assembly, AXLN	76444801
		Printed wiring assembly, BXLN	76444802
		Printed wiring assembly, 4BZX	76903900
		Fan, axial	94375400
		Regulator assembly +5 V dc	91708201
		Regulator assembly -5 V dc	47398202
		Cable, assembly - B	77523000
		Cable, assembly - A	77522400
Storage module drive interface	GB138-A	Printed wiring assembly	88962300

FLEXIBLE DISK DRIVE

Table 8K-1 lists replaceable assemblies and their part numbers.

TABLE 8K-1. PARTS DATA FOR FLEXIBLE DISK DRIVE

Assembly	Equipment Number	Spare Part	Part Number
Flexible disk drive	BR803-U	Assembly	75744052
	GD130-A,GD308-A	Power supply, 24 V dc	96753485
	GD308-A	Power supply, 5 V dc	96753484
Flexible disk drive interface	FA730-A	Printed circuit board	96752111
	BT289-A/B,YA137-A	Cable interface	96753150
	BT289-A/B	Operator's Panel	96756832
	YA137-A	Unit 0	96750510
	BT290-A	Unit 1	96750229
	YA138-A		96750511
Disk cartridge (diskette) CDC Format			96820413

KEYBOARD DISPLAY TERMINAL

Table 8L-1 is a list of replaceable assemblies and their part numbers.

Table 8L-1. PARTS DATA FOR KEYBOARD DISPLAY TERMINAL

Assembly	Equipment Number	Spare Part	Part Number
Keyboard Display Terminal	CC555-A	-	96754273
		Printed wiring assembly, logic module	90460498
		Cathode ray tube	51907300
		Transformer, high voltage	61407417
		15-volt regulator	15130504
		Transformer, ac entry	51905600
		AC power panel	61371104
		Printed wiring assembly, bulk power supply	90421700
		Switch, test mode	51781602
		Vertical choke coil	61407419
		Keyboard module	51915401
		Deflection yoke	61407418
		Potentiometer, intensity control	51899042
		Audible alarm	51908901
I/O-TTY Controller	CW212-A	Printed wiring assembly	88909701
		Cable, interface	88894401

TABLE 8M-1

PARTS AND EQUIPMENT

Parts and Equipment	Equipment Number	Part Number
Multiplexer loop interface adapter	YA186-A	96744608
MLIA no. 1 (input loop)		74446703
MLIA no. 2 (output loop)		74488304
MLIA no. 3 (processor interface)		74488501
Cable assembly (processor to loop multiplexer)		96753600
Cable assembly (processor to loop multiplexer)		96753601
Communication Multiplexer	DY198-A	74665500
Loop multiplexer		74411901
Power supply assembly		96754213
Asynchronous communications line adapter (ACLA)	DU137-A	74447001-M
Cable assemblies (asynchronous communication line adapter to modem)		Refer to table 8M-2

TABLE 8M-2 ACLA CABLES

Product No.	Assy No.	Application	Connector to Modem	Connector to ACLA
10400-1	746577xx	Compatible with AT&T 103/113 data sets	25-contact plug (male)	25-contact socket (female)
10400-2	746579xx	Can connect to terminal directly	25-contact socket (female) with threaded retaining spacers	25-contact socket (female)
10400-3	746583xx	Compatible with AT&T 103F, 202R data sets or CDC telegraphic level converter, or equivalent modem	25-contact plug (male)	25-contact socket (female)

NOTE: XX of the cable assembly number denotes cable length per customer requirement.

1 x 8 CHANNEL COMMUNICATIONS LINE ADAPTER

Table 8N-1 is a list of replaceable assemblies and their part numbers.

TABLE 8N-1. PARTS DATA FOR 1 x 8 CHANNEL COMMUNICATIONS LINE ADAPTER

Assembly	Equipment Number	Spare Parts	Part Numbers
1 x 8 CH. CLA	FJ 442	P.W.A.	96740200
	AT 354A	Cable - CRT	96750282
	AT 354C	Cable - Printer	96750284
	AT 354B	Cable - Modem/ Punch	96750283
		Loop-Back Test Cable	96750678
Cable Adapter		P.W.A.	96754537

8P-1 MATRIX PRINTER

Table 8P-1 lists the replaceable assemblies and their part numbers. {See Matrix Printer Equipment Parts Identification Manual 95445027.}

TABLE 8P-1 PARTS DATA FOR MATRIX PRINTER

1.	Print Head	44671738
2.	Print Head Flat Cable Assembly	44671651
3.	Horizontal Transducer Board	95437201
4.	Code Strip	44673276
5.	Cassette Drive Cord Assembly	44671423
6.	Pulley Assembly - Left and Right Hand	44672092
7.	Horizontal Servo Motor	44671642
8.	Vertical Servo Motor	44671643
9.	Tractor Assembly - Right Hand	44672190
10.	Tractor Assembly - Left Hand	44672189
11.	Tractor Flap - Right Hand	44671736
12.	Tractor Flap - Left Hand	44671735
13.	Tractor Timing Belt	76625600
14.	Clutch Assembly	44671635
15.	Control Panel Lens and Lamp	95440400
16.	Rear Fan	00852001
17.	Front Fan	44672755
18.	Platen Advance Shaft	44671631
19.	Platen Assembly	44671285
20.	Head Support Shafts	44671568
21.	Print Head Support Castings	44671450
22.	RS-232 Interface Board	44670096/97

Controller as supported by CLAMP diagnostics

1.	1 x 8 Channel Communications Line Adapter	96750200
2.	1 x 8 CH. CLA to Matrix Printer Cable	96750284

CARTRIDGE DISK DRIVE

PARTS DATA

Table 8Q-1 lists the replaceable assemblies and their part numbers.

TABLE 8Q-1 PARTS DATA FOR CARTRIDGE DISK DRIVE SUBSYSTEM

ASSEMBLY	EQUIPMENT NUMBER	SPARE PART	PART NUMBER
CARTRIDGE DISK DRIVE	BR704-A		75741086
		Printed wiring assemblies:	
		Control board	77830896
		Sector board	75883201
		Servo board	77831400
		Data recovery board	75297105
		Read/write/erase board	75297105
		I/O Board	75858205
		ELCO connector board	83446102
		Brake board	75866206
		Card cage mother board	75870203
		Servo preamplifier board	77831200
		Piggyback power board	77830330
		Power supply	77830320
		Switch board	75299102
		Control panel lamp	77832393
		Absolute filter	83437400
		Static eliminator	40054700
		Spindle drive belt	
		Spindle drive motor	83467401
		Blower assembly	83457100
		Pack lock solinoid	94357803
		Cartridge-on switch	77598501
		Brush motor	75740701
		Sector ring	83482400

TABLE 8Q-1 PARTS DATA FOR CARTRIDGE DISK DRIVE SUBSYSTEM (CONTINUED)

ASSEMBLY	EQUIPMENT NUMBER	SPARE PART	PART NUMBER
		Disk brush (center)	40024501
		Disk brush (outer)	40024502
		Disk brush switch	36159806
		Cartridge disk index/sector transducer	75793802
		Fixed disk index/sector transducer	75793803
		Fixed disk	89293100
		Triac assembly	36085800
		Start relay	22940903
		Bridge rectifier	95582004
Cartridge Disk Drive Controller	FA111-A		89600611
		Printed wiring assembly	89601632
		Cable (controller to disk drive)	89600209
100 to 200 Track Per Inch Option	BT229-A		83459400

MAGNETIC TAPE TRANSPORT

Table 8R-1 lists the replaceable assemblies and their part numbers.

TABLE 8R-1. PARTS DATA FOR MAGNETIC TAPE SUBSYSTEM

ASSEMBLY	EQUIPMENT NUMBER	SPARE PART	PART NUMBER
Magnetic tape transport (7-track, 25IPS, NRZI)	BW101-A		96744406
Magnetic tape transport (9-track, 25IPS, DM)	BW303-A		96744489
Magnetic tape transport (9-track, 50IPS, DM)	BW305-A		86740701
		Power supply assembly	76797400
		Vacumn relay	95868701
		Interlock switch	62048203
		Power on/off switch	95868902
		Read/write/erase head Assembly (9-track)	86690601
		Read/write/erase head Assembly (7-track)	86690603
		File protect sensor Assembly (25IPS)	86702001
		File protect sensor Assembly (50 IPS)	77226901
		EOT/BOT sensor assembly	86699701
		Lamp-operators panel (type 336)	95870400
		Lamp-Fiber optics source	95873101
		Differential pressure switch	95868300
		Fiber optics	95867901
		Blower motor assembly	86734401
		Tape tactometer (25IPS)	89786400
		Tape tachometer (50IPS)	89786401
		Capstan (25IPS)	86687300
		Capstan (50 IPS)	
		Capstan Motor (25IPS)	86690801
		Capstan Motor (50IPS)	
		Reel Motor (25IPS)	86721901
		Reel Motor (50IPS)	
		Printed Wiring assemblies. Refer to the cross reference-table 8R-2	
		Type 4532 - Read Recovery (NRZI)	59453201
		Type 4549 - Read Recovery (DM, 50 ips)	59454903
		Type 4552 - Read Recovery (DM, 25 ips)	59455201

(Continued)

		Type 4553- Read Logic {DM, 50 ips}	59455302
		Type 4734 - 4 Channel Write Driver {NRZI}	59473401
		Type 4735 - 5 Channel Write Driver {NRZI}	59473501
		Type 4742 - 4 Channel Write Driver {DM, 25 ips}	59474201
		Type 4743 - 5 Channel Write Driver {DM, 25 ips}	59474301
		Type 4745 - 4 Channel Write Driver {DM, 25 ips}	59474501
		Type 4746 - 5 Channel Write Driver {DM, 50 ips}	59474601
		Type 4940 - Pneumatics Regulator	59494001
		Type 4667 - Control Logic {DM, 50 ips}	59466701
		Type 5147 - Control Panel	59514701
		Type 5157 - Reel Power Amplifier {NRZI, and DM, 25 ips}	59515701
		Type 5158 - Capstan Power Amplifier {NRZI, and DM, 25 ips}	59515801
		Type 5163 - Tach Sensor	59516302
		Type 4605 - Reel Logic {NRZI, and DM, 25 ips}	59460501
		Type 5216 - I/O Logic {7 Track}	59521601
		Type 5219 - I/O Logic {DM, 50 ips}	59521901
		Type 5220 - I/O Logic {DM, 25 ips}	59522001
		Type 5258 - Read Logic {NRZI}	59525801
		Type 4670 - Capstan Logic {9 Track, 25 ips}	59467001
		Type 5248 - Read Logic {DM, 25 ips}	59524801
		Type 4582 - Reel Power Amplifier {DM, 50 ips}	59458201
		Type 4583 - Capstan Power Amplifier {DM, 50 ips}	59458301
		Type 4669- Capstan Logic {DM, 50 ips}	59466901
		Type 4606 - Reel Logic {DM 50 ips}	59460601
		Type 4668 - Capstan Logic {7 Track}	59466801
		Type 4666 - Control Logic {NRZI, and DM, 25 ips}	59466601
		Type 4964 - Voltage Protect	59496401
		Type 4603 - Loop Column Sensor	59460301
Magnetic Tape Formatter	DZ101-A		77146201
		Cable {Formatter to transport-4'}	86959000
		Power Supply	
		Printed Wiring Assembly-4956	59495603
		Assembly-4957	59495701
		Assembly-4958	59495801
		Assembly-4959	59495901
		Assembly-4960	59496001
		Assembly-4961	59496101
		Assembly-4962	59496201
		Assembly-4963	59496303
		Indicator lamp {No. 328}	
Magnetic Tape Controller	FA464-A	Cable {Controller to Formatter}	89600612
		Printal Wiring Assembly	89600200
			89601044
Magnetic Tape	BT282-A	{Continued}	96756869

Formatter Blower {Single Transparent} Magnetic Tape Formatter Blower {Dual Transport}	BT283-A		96750246
Magnetic Tape Cabinet {Single Transport}	GH447-B	Cooling fan	39545100 96750233
Magnetic Tape Cabinet {Dual Transport}	GH447-C		96750237
		Circuit Breaker {5 amperes}	39283423
		Circuit Breaker {10 amperes}	39283424
		Sensor, temperature {130°F}	51808108
		Sensor, temperature {140°F}	51808116
		Indicator {Red}	84796001
		Indicator {Amber}	84796003
		Cooling fan	88912000
		Switch, toggle	95656600
		Filter, ac line	96744778
		Resistor Assembly	96753399
		Printed Wiring assembly {AC Power-up Control No. 2}	96754580
		Triac assembly	96754371

TABLE 8R-2. CARD PLACEMENT CHART

LOCATION	9Trk 25 IPS DM BW303	7Trk 25 IPS NRZI BW101	9 Trk 50 IPS DM BW305	FUNCTION
XA1	5220	5216	5219	I/O Logic
XA2	4666	4666	4667	Control Logic
XA3	4605	4605	4606	Reel Logic
XA4	4670	4668	4669	Capstan Logic
XA5	--	4532	--	Read Recovery
XA5	4743	--	4746	Write Driver 5 Channel
XA6	--	4532	--	Read Recovery
XA6	4742	--	4745	Write Driver 4 Channel
XA7	--	4532	--	Read Recovery
XA7	5248	--	4553	Read Logic
XA8	--	5258	--	NRZI Read Logic
XA8	4552	--	4549	Read Recovery
XA9	--	4735	--	NRZI Write 5 Channel
XA9	4552	--	4549	Read Recovery
XA10	--	4734	--	NRZI Write 4 Channel
XA10	4552	--	4549	Read Recovery
	4603	4603	4603	Loop Column Sensor
	4940	4940	4940	Pneumatics Regulator
	4932	4932	4932	EOT/BOT Sensor
	4580	4580	4582	Reel Power Amplifier
	4581	4581	4583	Capstan Power Amplifier
	5147	5147	5147	Control Panel
	5163	5163	5163	Tach Sensor

CARD READER/LINE PRINTER/COMMUNICATION
LINE ADAPTER

Table 8S-1 is a list of replacable assemblies and their part numbers

ASSEMBLY	EQUIPMENT NUMBER	SPARE PART	PART NUMBER
CR/LP/CLA Controller	FC109-A	Printed Wiring Assy	89600188
		Cable interface, CLA	61378100
		Cable interface, Card Reader	88894500
		Cable interface, Line Printer	88894600
		Cable interface, Paddle Board	96751074
		Cable, CLA to NOP	89600246
Card Reader	CB104-K	{Ref. Table 8D-1}	
Line Printer	CL408-C/ CL411-C	{Ref. Table 8F-1}	

LINE PRINTER

Table 8T-1 lists the replaceable assemblies and their part numbers.

TABLE 8T-1. PARTS DATA FOR LINE PRINTER

ASSEMBLY	EQUIPMENT NUMBER	SPARE PART	PART NUMBER
Line printer	CT103-A CT105-A	Refer to Parts Identification Manual - 95445067 and Reference and Field Service Manual - 95445060	

COMMENT SHEET

MANUAL TITLE CDC® CYBER 18-20/30 Timeshare Computer System

Hardware Maintenance Manual

PUBLICATION NO. 96768683 REVISION 04

FROM NAME: _____

BUSINESS
ADDRESS: _____

COMMENTS: This form is not intended to be used as an order blank. Your evaluation of this manual will be welcomed by Control Data Corporation. Any errors, suggested additions or deletions, or general comments may be made below. Please include page number.

CUT ALONG LINE

STAPLE

STAPLE

FOLD

FIRST CLASS
PERMIT NO. 333

LA JOLLA, CA.

BUSINESS REPLY MAIL
NO POSTAGE STAMP NECESSARY IF MAILED IN U.S.A.

POSTAGE WILL BE PAID BY

CONTROL DATA CORPORATION
PUBLICATIONS AND GRAPHICS DIVISION
4455 EASTGATE MALL
LA JOLLA, CALIFORNIA 92037

CUT ALONG LINE

FOLD

STAPLE

STAPLE